KIOTI

CK25/27/30/35
(CK25H/27H/30H/35H)

WORKSHOP MANUAL

daedong

PREFACE

This manual is to provide servicing personnel with information on the general specifications, service, operating principle, troubleshooting, exploded view including part name, removing and installing procedures for **CK25/27/30/35** and **CK25H/27H/30H/35H** tractors with high-end technology.

All information in this manual is based on the latest product information available at the time of publication. Therefore, some of the information in this manual may differ from the machine you have.

DAEDONG has a principle to apply update to the next edition of the manual if there is any. However, **DAEDONG** has no obligation to modify the contents in this manual, especially the contents in the manual which is already distributed or published.

The modified information is available in **DAEDONG**'s online electronic manual system (DEMSS).

This manual is ultimately to satisfy customers with best performance of tractor. If there is any typo, wrong information or question for this manual, feel free to contact **DAEDONG**.

2008. 06

Overseas service team

DAEDONG INDUSTRIAL Co., Ltd.

IMPORTANT

- **Using unspecified parts, fuel and lubricants other than DAEDONG's genuine parts can damage the tractor and such damage will not be covered by warranty.**

REMARK

- **We reserve the right to make changes throughout the entire manual at any time without notice.**

TABLE OF CONTENTS

CHAPTER 0	SAFETY FIRST
CHAPTER 1	GENERAL
CHAPTER 2	ENGINE
CHAPTER 3	CLUTCH
CHAPTER 4	TRANSMISSION
CHAPTER 5	HST
CHAPTER 6	REAR AXLE
CHAPTER 7	BRAKE
CHAPTER 8	FRONT AXLE
CHAPTER 9	STEERING SYSTEM
CHAPTER 10	HYDRAULIC SYSTEM
CHAPTER 11	ELECTRIC SYSTEM
CHAPTER 12	INDEX

CK25/27/30/35

SAFETY FIRST

TABLE OF CONTENTS

1. FOR SAFETY 0-2

1.1 Alert symbols 0-2

2. SAFETY TIPS 0-3

2.1 Safety gear 0-3

2.2 Work place 0-3

2.2.1 Ventilating system 0-3

2.2.2 Safe working place 0-3

2.2.3 Illumination 0-3

2.2.4 Safety equipment 0-3

2.2.5 Clean working area 0-3

2.3 Safety instructions when preparing tractor 0-4

2.4 Avoid fires 0-4

2.5 Cautions when handling the battery 0-5

2.6 Cautions for high pressure hoses 0-6

2.7 Use of appropriate tools and equipment 0-6

2.8 Handling of hazardous materials 0-6

2.9 Handling of rotating blade, shaft and driving belt 0-7

2.10 Prevention of scald 0-7

2.11 Disposal of environmental waste 0-8

2.12 Cautions when handling tires 0-8

3. SAFETY DECALS 0-9

1. FOR SAFETY

- Most accidents can be avoided if basic safety instructions and regulations are followed. Always follow the safety regulations and avoid any dangerous situation to prevent an accident.
- You can be unexpectedly injured if inspecting or servicing the tractor without full knowledge of it. Read the service manual carefully before starting servicing and follow the instructions for servicing, maintenance and inspection to prevent any injury.

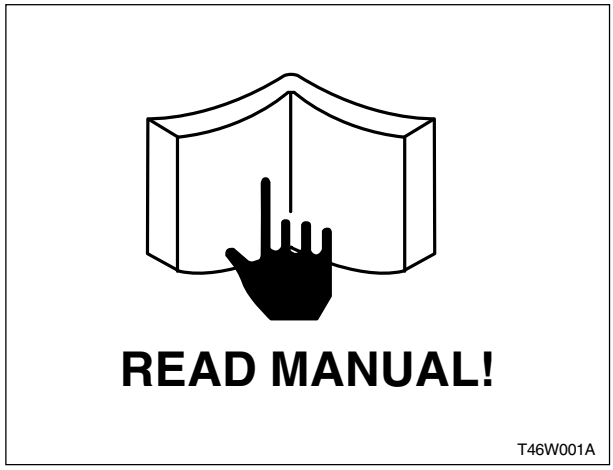

1.1 ALERT SYMBOLS

In this manual, the following safety-alert symbols are used. Their meanings are as follows:

A. REMARK

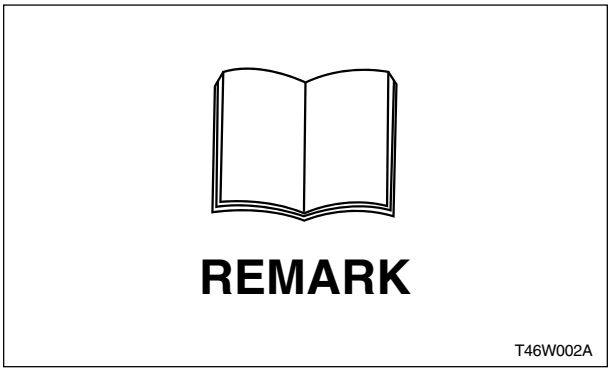

- Broaden your knowledge with additionally supplied service information for optimal service.

B. CAUTION

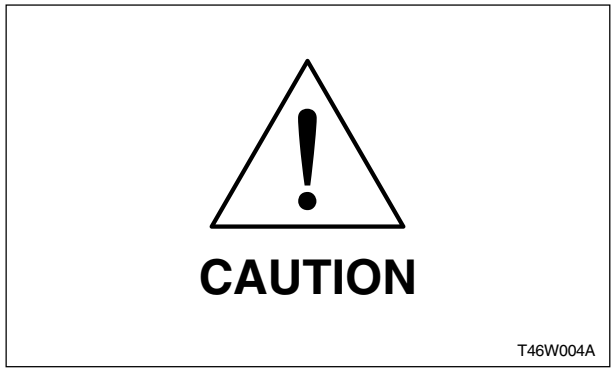

- This mark indicates potentially hazardous situation which, if not observed, may result in serious injury.

C. IMPORTANT

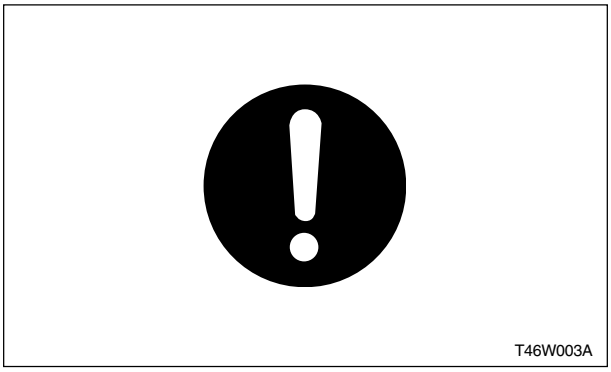

- This mark indicates emphasis on information which can be confused when servicing. If this information is not carefully read and observed, the tractor cannot fully function or may be damaged.

D. WARNING

- This mark indicates hazardous situation which, if not observed, may result in death or injury.

2. SAFETY TIPS

2.1 SAFETY GEAR

When working on the tractor, wear safety gloves, safety shoes, ear plugs, safety goggles, safety helmet, working clothes, etc. appropriate for your working environment. Never wear loose fitting clothing or a tie which can be caught to the rotating part. According to the statistics, most accidents that occurred with rotating parts are due to this inappropriate manner of wearing clothes.

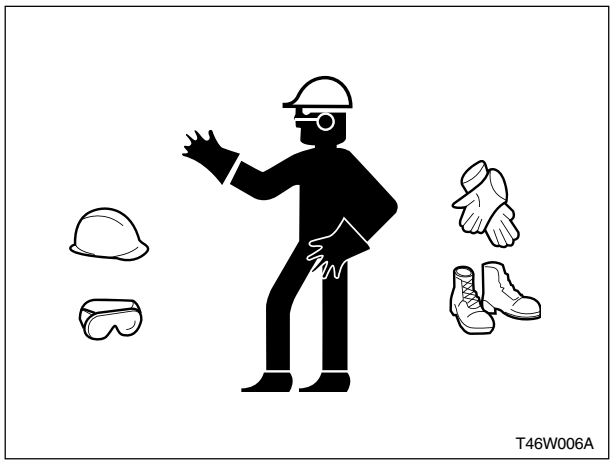

2.2 WORK PLACE

2.2.1 VENTILATING SYSTEM

The service should be performed in well-ventilated area. If the engine should be started in an enclosed place, the exhaust gas pipe should be installed.

WARNING

- ***California Proposition 65 Warning***

  Inhaling exhaust gas can cause cancer or damage the generative function leading to infertility.

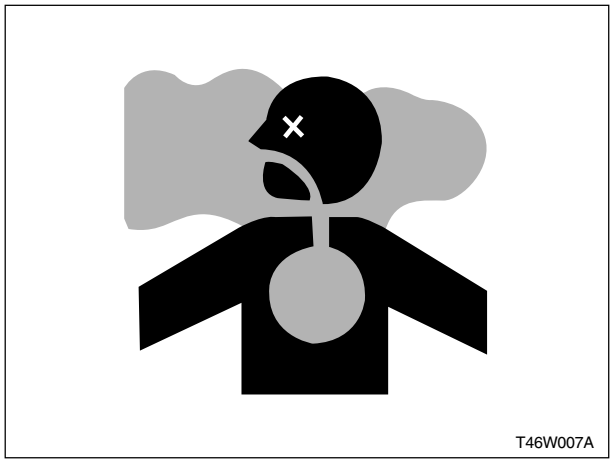

2.2.2 SAFE WORKING PLACE

The work should be done in a wide, level and safe place to prevent slip and fall accident.

2.2.3 ILLUMINATION

The work place should be well illuminated. If working in a dark place or under the tractor, use the work lamp. The work lamp should be covered by the safety cover. The bulb can cause fire due to leaked fuel if it is broken.

2.2.4 SAFETY EQUIPMENT

Be sure to keep a first aid kit and fire extinguisher handy at all times.

2.2.5 CLEAN WORKING AREA

Keep the working area clean before and during work. If any oil or fuel is spilled, it should be cleaned up immediately.

2.3 SAFETY INSTRUCTIONS WHEN PREPARING TRACTOR

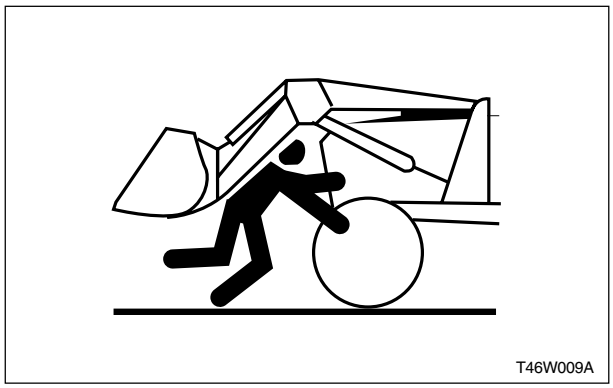

- Lower the implement on to the ground.

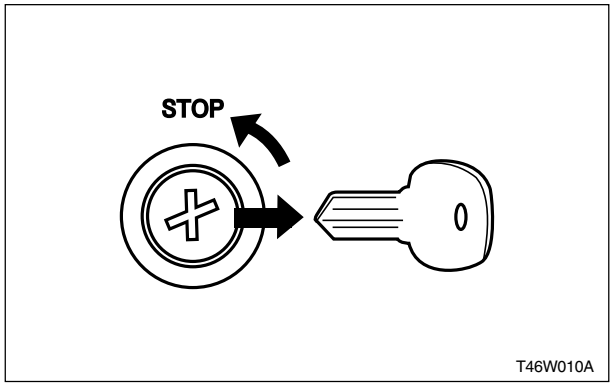

- Stop the engine and remove the key.
- Put “Do not operate” label on the tractor if necessary.

2.4 AVOID FIRES

- Never smoke or allow flames in your work area when servicing the fuel system.

- Keep flames or sparks away from the spray paint or fuel containers and be careful of leak.

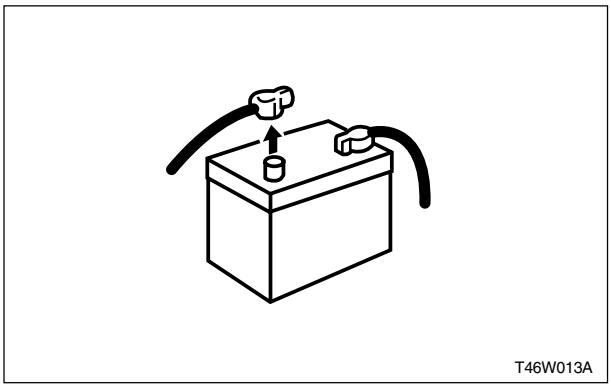

- Always disconnect the battery cable before servicing.
- Be extra cautious of fire when welding.

- Always keep a fire extinguisher in workshop.

2.5 CAUTIONS WHEN HANDLING THE BATTERY

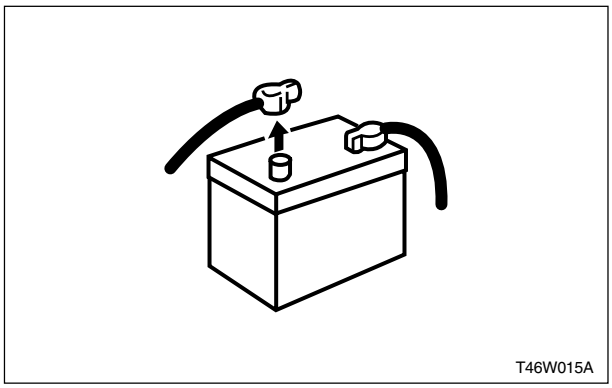

- Always disconnect the negative battery cable first and reconnect it last to avoid sparks from an accidental short circuit. You can get injured or fire may break out.

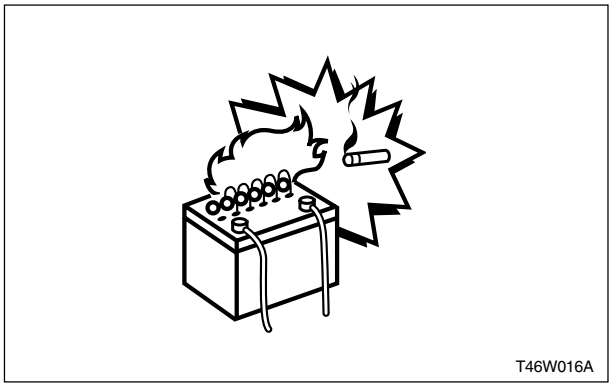

- Do not charge the frozen battery. Charging the frozen battery can cause explosion. Let the battery warmed up to ambient temperature (16°C, 60°F) before charging.

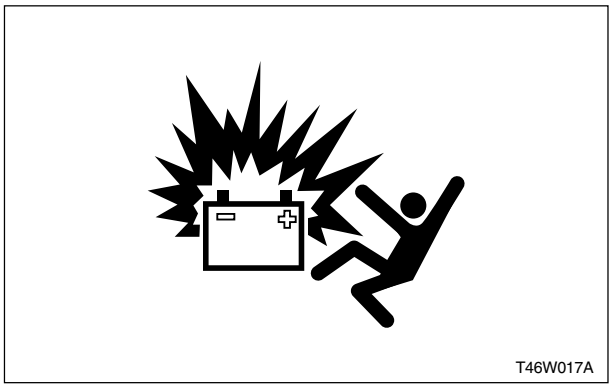

- Keep sparks and flames (match, lighter) away from the battery. The battery can explode due to the battery fluid.
- Never connect the battery's negative and positive cables with metal for test. Use only tester when checking the battery voltage.

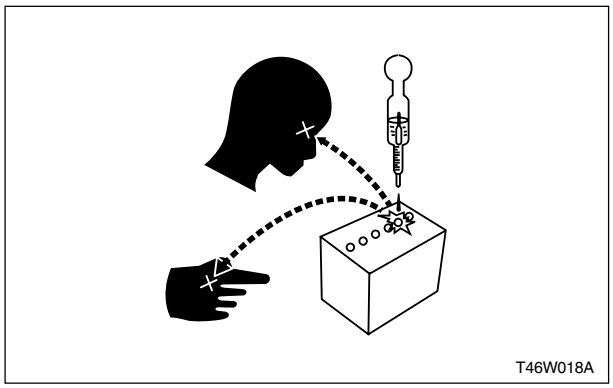

- The battery contains the acid that can burn you. When it contacts with your eyes, you may lose your sight.

2.6 CAUTIONS FOR HIGH PRESSURE HOSES

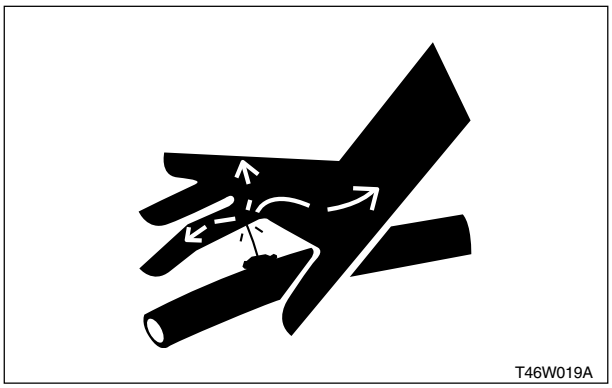

- The hydraulic fluid leaked from high pressure hoses or pipes can penetrate your skin.

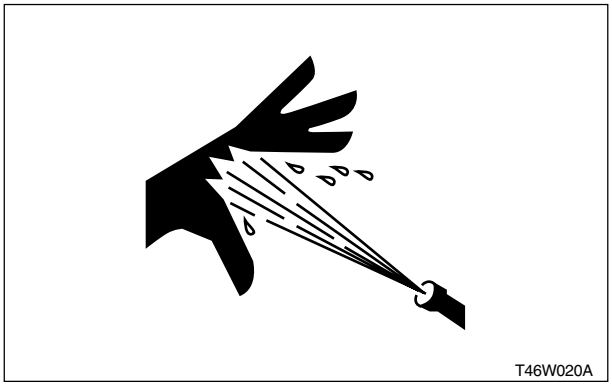

- Before connecting a high pressure hose or pipe, stop the engine and depressurize it by valve.
- Check the bolts for tightness before starting the engine after servicing the hydraulic system.
- Use a cardboard or plank when checking leakage.

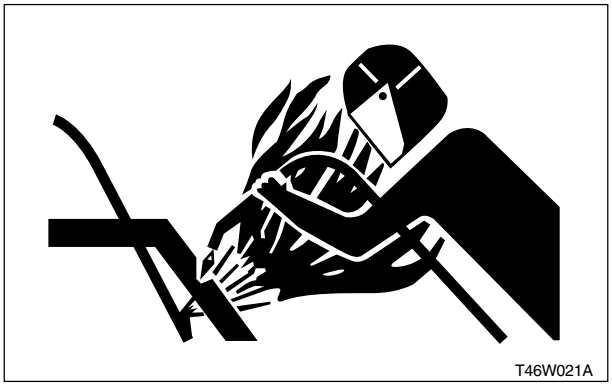

- Never weld the high pressure pipe or the surrounding area. The pipe or hose can be heated and explode which can lead to fire or burn.

2.7 USE OF APPROPRIATE TOOLS AND EQUIPMENT

- Use the appropriate tools in proper size. If an inappropriate tool is used, it can be slipped which can damage parts or injure you.
- Do not confuse units (mm, inch, etc.).
- Use the air impact wrench only when unscrewing the bolts or nuts. Such wrench should not be used when assembly precisely machined parts which its tightening torque should be strictly observed. It can cause malfunction.
- Be careful of a socket popped out due to the turning force when using the air impact wrench. Especially, be extra cautious when working on connection or socket with joint.
- When lifting the tractor with a hydraulic jack or a hoist, fix it firmly and install the auxiliary support. Never work under the tractor if the support and the hydraulic jack (hoist) are not installed.
- When using a hydraulic jack or a hoist, do not use it over the limit of the equipment and the conveying belt.
- Make sure that the hydraulic lock operates properly before using the hydraulic jack. Improper use of lock can cause a serious accident.
- Check the buttons and operating direction of the hoist before using it. Improper operation can cause a serious accident.
- Do not use wooden blocks or bricks as support under the tractor. As the tractor's weight is continuously applied to them, they can be broken or collapsed.

2.8 HANDLING OF HAZARDOUS MATERIALS

- Do not use pressurized air to blow out hazardous materials, such as clutch dust, with compressed air. Inhaling such hazardous materials can damage your health.

NOTE:

- ***All DAEDONG's genuine parts contain no asbetos.***

- These materials should be rinsed or wiped away after spraying oil.

2.9 HANDLING OF ROTATING BLADE, SHAFT AND DRIVING BELT

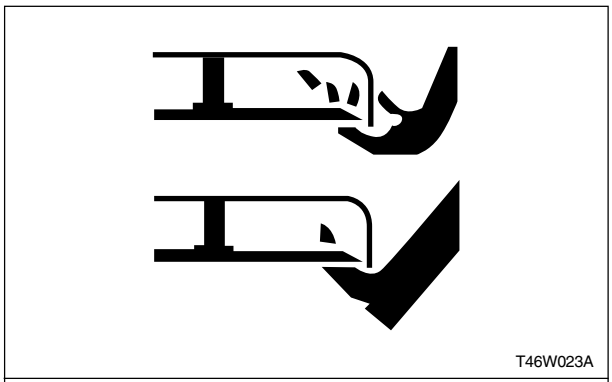
T46W023A

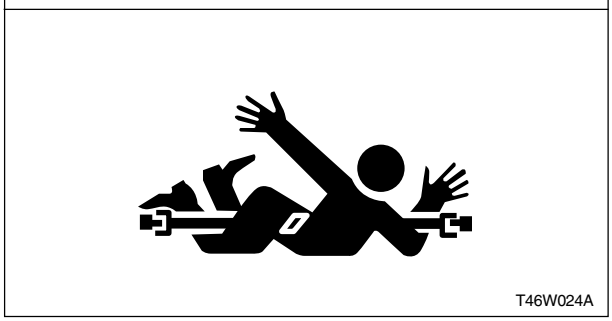
T46W024A

- Do not set a hand or a foot into the tractor's rotating blade or PTO shaft.

  Be extra careful when you are in loose clothes.

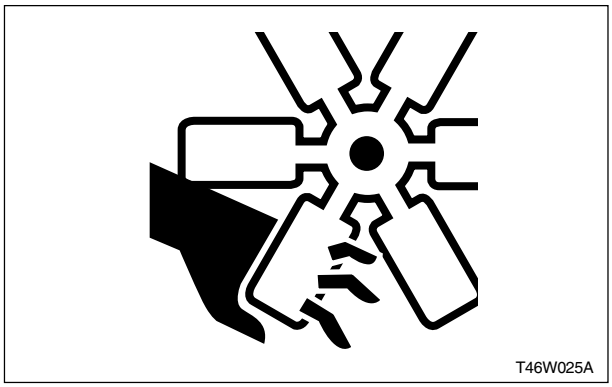
T46W025A

- Be careful not to get caught by the rotating engine cooling fan.

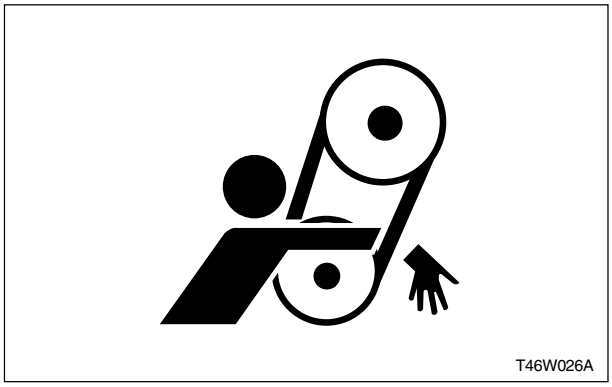
T46W026A

- You can be seriously injured if your hand or clothes is caught by the rotating fan belt or A/C belt.

2.10 PREVENTION OF SCALD

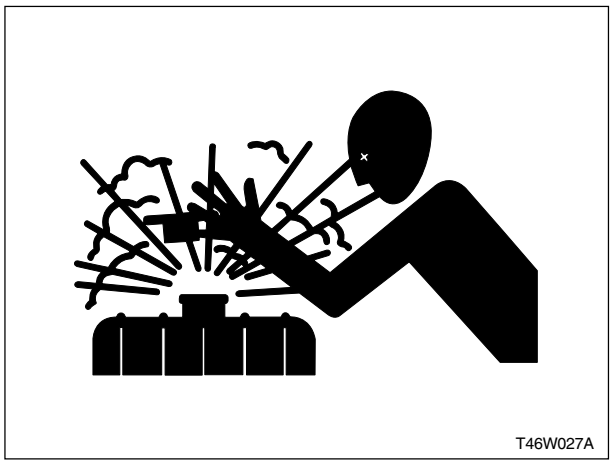
T46W027A

- Do not open the radiator cap when the radiator is hot. Hot coolant or steam can be surged leading to a serious scald.

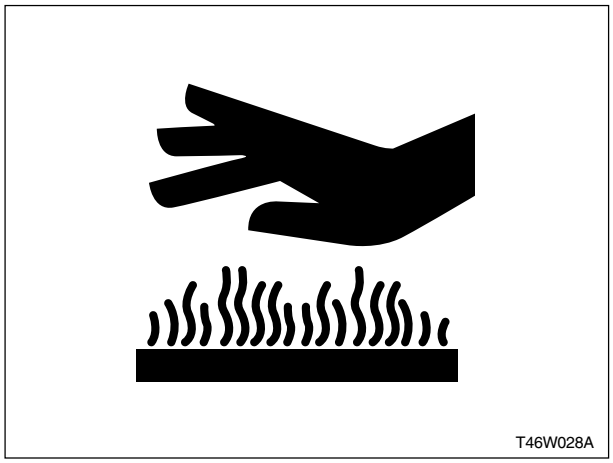
T46W028A

- Check the surface temperature of the container before draining the engine oil, transmission fluid, coolant, etc. If it is hot, let it cool down before draining it. There is danger of burning.
- Perform any service on the engine parts (muffler, exhaust manifold, turbocharger, etc.) only when they are not hot.

2.11 DISPOSAL OF ENVIRONMENTAL WASTE

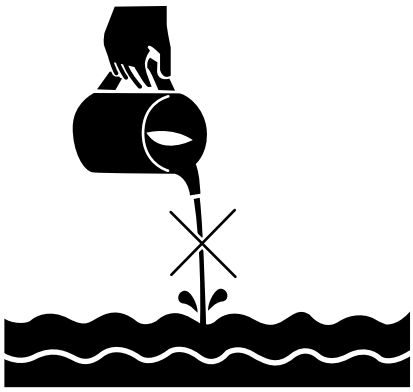

T46W029A

- Observe all relevant environmental protection regulations when disposing used oil, transmission fluid, coolant, oil filter, etc. Otherwise, they can pollute the environment seriously and you can be charged in violation of regulations.

2.12 CAUTIONS WHEN HANDLING TIRES

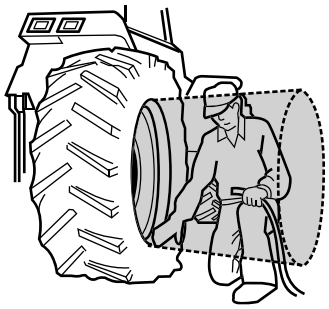

T46W030A

- The tire rims can fall out of the tires. Therefore, stay out of its way when checking or inflating tires.

T46W031A

- Do not weld or apply heat to the tire rim or disc. The tire can explode due to the rapidly increased pressure in the tire.
- Check tires for inflation pressure, damage, deformation, extended wear on lug and damage of rim and disc. Also check if wheel bolts, rim bolts and nuts are loose.

3. SAFETY DECALS

- The following safety decals are installed on the machine.

  If a decal becomes damaged, illegible or is not on the machine, replace it. The decal part number is listed in the parts list.

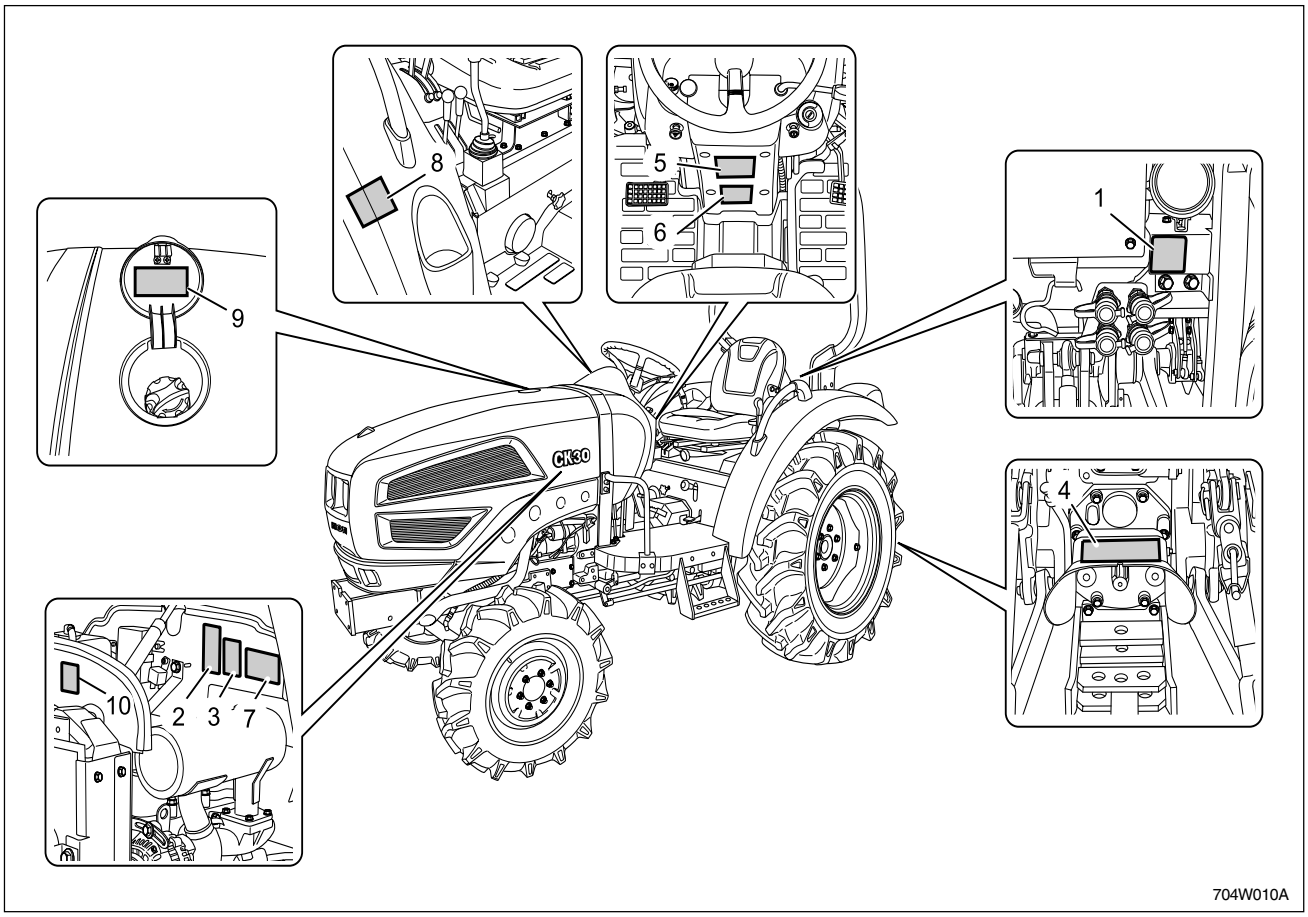

(1) Parts No. : T2181-54121 (Optional)

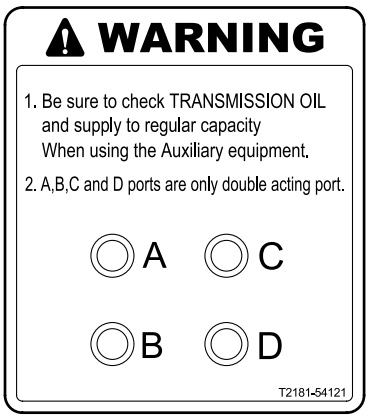

(2) Parts No. : T4625-52351

(3) Parts No. : T4625-52361

(4) Parts No. : T2325-50743

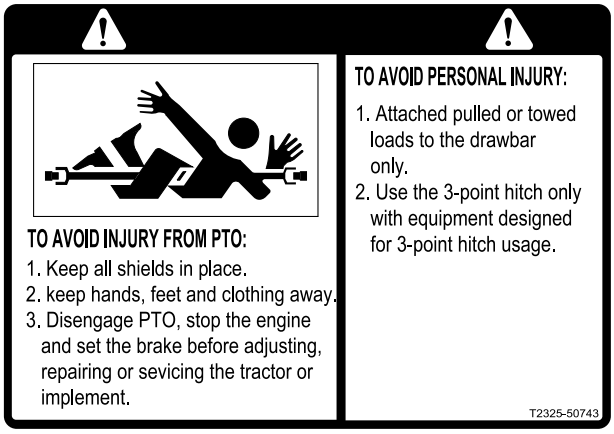

(5) Parts No. : T2325-50512

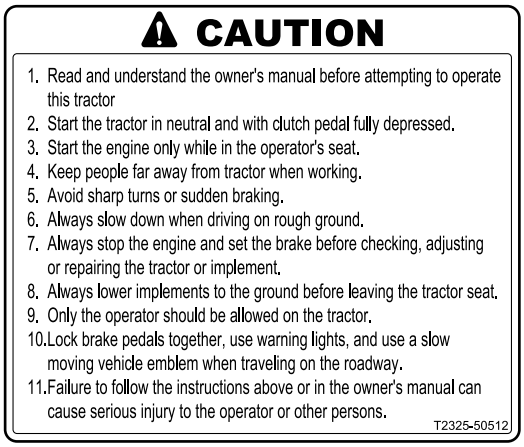

(6) Parts No. : T2445-50724

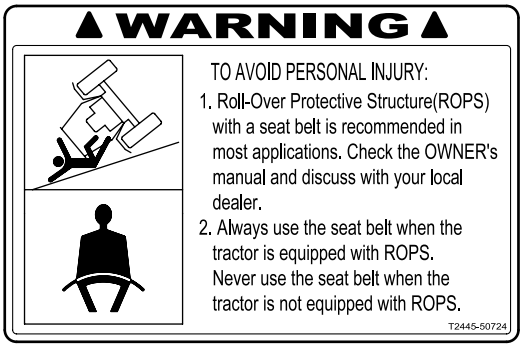

(7) Parts No. : T2615-55111

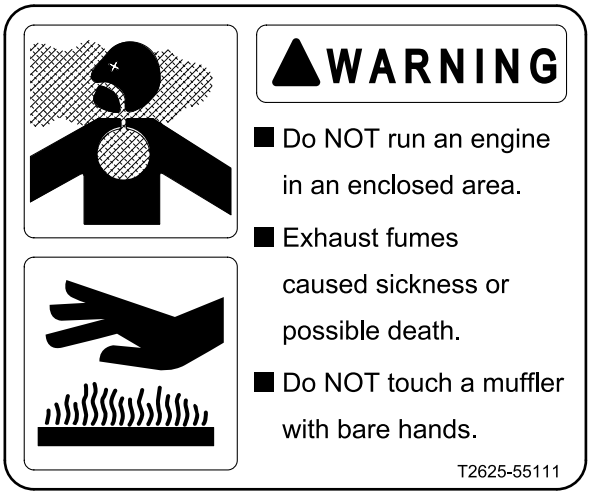

(8) Parts No. : T2350-54141

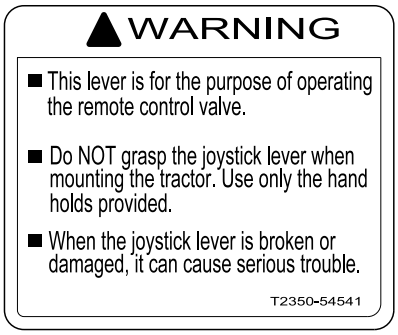

(9) Parts No. : T2615-54112

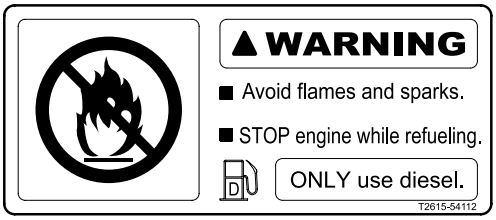

(10) Parts No. : T2615-53561

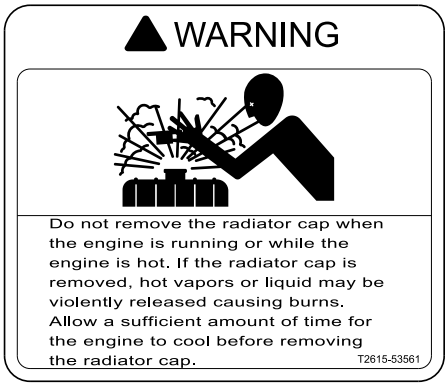

CARE OF DANGER, WARNING AND CAUTION LABELS

1. Keep danger, warning and caution labels clean and free from obstructing material.
2. Clean danger, warning and caution labels with soap and water, dry with a soft cloth.
3. Replace damaged or missing danger, warning and caution labels with new labels.
4. If a component with danger, warning or caution label(s) is replaced, make sure new label(s) is (are) attached in the same locations(s) as the replaced component.
5. Mount new labels by applying on a clean dry surface and pressing any bubbles to outside edge.

CK25/27/30/35

GENERAL

TABLE OF CONTENTS

1. TRACTOR IDENTIFICATION 1-3

2. DIMENSIONS 1-4

3. SPECIFICATIONS 1-5

4. LUBRICANTS, FUEL AND COOLANT ... 1-7

5. TIGHTENING TORQUES 1-8

5.1 General use screws, bolts and nuts . 1-8

5.2 Stud bolts 1-8

5.3 American standard screws, bolts and nuts with unc or unf threads 1-9

6. UNIT CONVERSION TABLE 1-10

7. MAINTENANCE SCHEDULE CHART ... 1-11

8. CHECK AND MAINTENANCE 1-12

8.1 Daily check 1-12

8.1.1 Checking and refueling 1-12

8.1.2 Checking engine oil level 1-13

8.1.3 Checking coolant level 1-13

8.1.4 Checking head light, hazard light, etc. 1-14

8.1.5 Checking seat belt and rops 1-14

8.1.6 Cleaning grill, radiator screen and oil cooler screen 1-14

8.1.7 Checking brake pedals and clutch pedal 1-14

8.1.8 Checking gauges, meter and easy checker 1-14

8.2 Every 50 hours 1-15

8.2.1 Lubricating grease fittings 1-15

8.2.2 Checking wheel bolt torque .. 1-16

8.3 Every 100 hours 1-17

8.3.1 Changing engine oil 1-17

8.3.2 Checking fuel line 1-17

8.3.3 Cleaning air cleaner primary element 1-18

8.3.4 Evacuator valve 1-18

8.3.5 Adjusting clutch pedal 1-18

8.3.6 Adjusting brake pedal 1-19

8.3.7 Cleaning fuel filter 1-19

8.3.8 Adjusting fan belt tension 1-20

8.3.9 Battery 1-20

8.4 Every 200 hours 1-22

8.4.1 Replacing fuel filter 1-22

8.4.2 Replacing engine oil filter 1-22

8.4.3 Replacing hydraulic oil filter & transmission oil filter (HST type) 1-23

8.4.4 Checking radiator hose and clamp 1-24

8.4.5 Adjusting toe-in 1-25

8.5 Every 400 hours 1-26

8.5.1 Changing transmission fluid . 1-26

8.5.2 Replacing fuel filter element 1-26

8.5.3 Changing front axle case oil 1-26

TABLE OF CONTENTS

8.6 Every 600 hours 1-27

8.6.1 Adjusting front axle pivot 1-27

8.6.2 Adjusting procedure 1-27

8.7 Every 800 hours 1-27

8.7.1 Adjusting engine valve clearance 1-27

8.8 Every 1 year 1-27

8.8.1 Replacing air cleaner element 1-27

8.9 Every 2 years 1-28

8.9.1 Flushing cooling system and changing coolant..... 1-28

8.9.2 Replacing radiator hose (water tubes) 1-29

8.9.3 Replacing power steering hose 1-29

8.9.4 Replacing HST oil line (HST type) 1-29

8.9.5 Replacing fuel hose..... 1-29

8.10 Service as required 1-30

8.10.1 Bleeding fuel system 1-30

8.10.2 Draining clutch housing water . 1-30

8.10.3 Replacing light bulb 1-30

8.10.4 Replacing fuse 1-31

9. TIRES 1-32

9.1 Inflation pressure 1-32

9.2 Tread 1-33

9.2.1 Front wheels 1-33

9.2.2 Rear wheels..... 1-34

9.3 Ballast 1-35

9.3.1 Front ballast..... 1-35

9.3.2 Rear ballast 1-35

9.4 Traveling speed 1-36

1. TRACTOR IDENTIFICATION

When contacting your local **DAEDONG** distributor, always specify engine serial number, tractor serial number and hour meter reading.

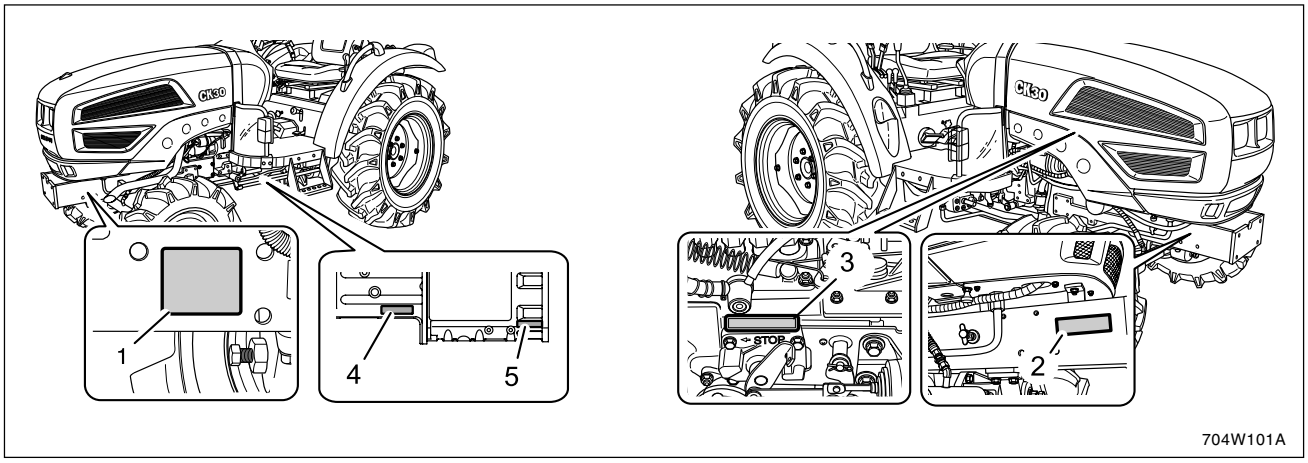

(1) Statutory Plate (2) Identification NO(EU) (3) Engine Serial Number
(4) Transmission Serial Number(HST TYPE) (5) Transmission Serial Number(MANUAL TYPE)

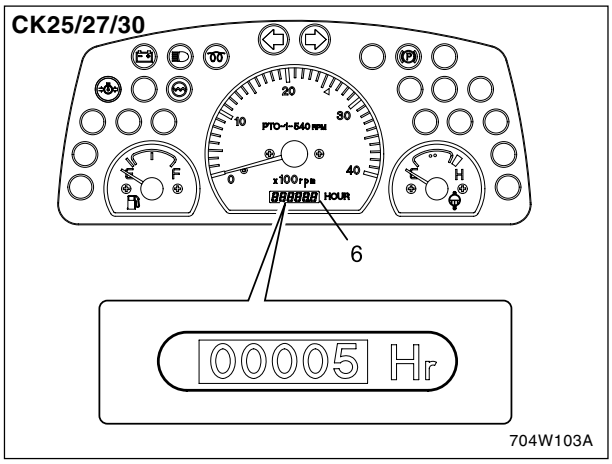

(6) Hour Meter

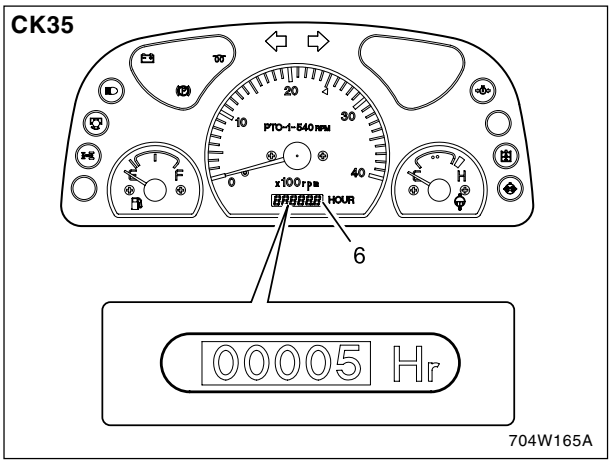

(6) Hour Meter

2. DIMENSIONS

mm (in.)

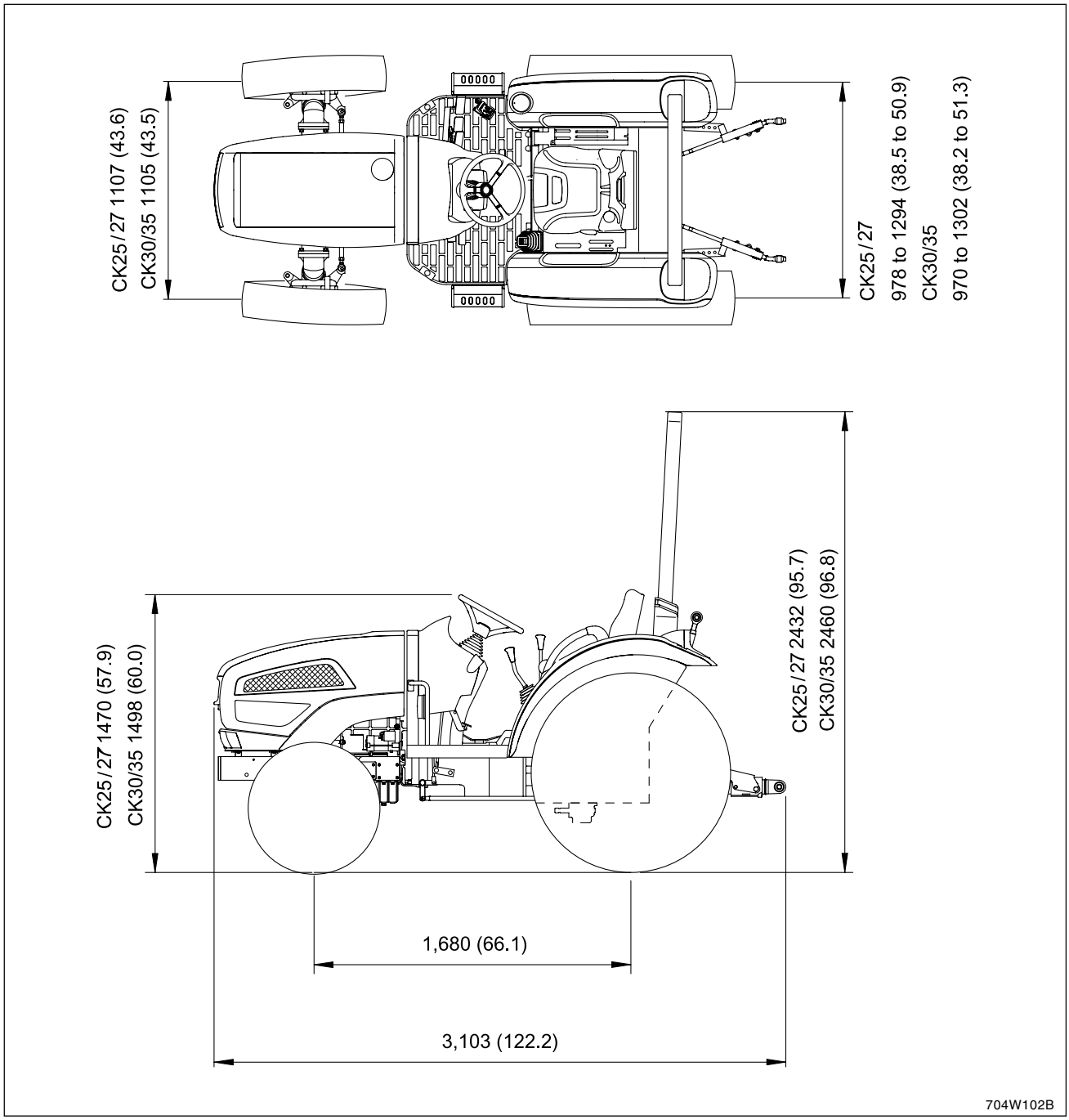

3. SPECIFICATIONS

MODEL:CK25/CK27

Model		CK25		CK27	
		MANUAL	HST	MANUAL	HST
Engine	Model	TD1300LXA	TD1300LXE	3A139LWM	3A139LWH
	Type	Vertical, water-cooled, 3-cylinder diesel			
	Engine gross HP (kW)	25 (18.7)		28 (20.7)	
	P.T.O HP (kW)	19 (14.2)	18 (13.4)	21.7 (16.2)	20.5 (15.3)
	Displacement cc (cu.in)	1,299 (79.3)		1,393 (85.0)	
	Rated revolution r.p.m min-1	2,600			
	Fuel tank capacity ℓ (gal.)	30 (7.9)			
Drive train	Clutch	Dry dual	Dry single	Dry dual	Dry single
	Transmission	Synchro shuttle	Hydrostatic Drive	Synchro shuttle	Hydrostatic Drive
	Speeds	8F 8R (EU-option:16F16R)	INF.3	8F 8R (EU-option:16F16R)	INF.3
	Differential lock	Standard			
	Brake	Wet disc type			
	P.T.O	Transmission	Live	Transmission	Live
	Rear (rpm)	540 rpm at 2,520 engine rpm / (Option 1,000 rpm)			
	Mid (rpm)	(Option 2,000 rpm at 2,499 engine rpm)			
Hydraulic system	Pump	Gear (Tandem)			
	Pump capacity ℓ/min (gpm)	50.1 (13.24) / 1st : 32.9 (8.7), 2nd : 17.2 (4.54)			
	3-point hitch	Cat.I			
	Maximum lifting capacity (24in. aft of hitch) kg (lbs)	800 (1,764)			
	Hydraulic lift control system	Position control (Option : Draft, Mixed control)			
	Steering	Hydrostatic Power Steering			
Standard tire size	Front AG.(TURF,INDUSTRIAL)	6-14, 6PR (25 x 8.50-14, 25 x 8.50-14) [Only USA : 7-14 (4PR), 27 x 8.50-15 (4PR), 25 x 8.50-14 (6PR)			
	Rear AG.(TURF,INDUSTRIAL)	9.5-24, 4PR (13.6-16, 15-19.5) [Only USA : 11.2-24 (4PR), 41 x 14.0-20 (4PR), 15 x 19.5 (6PR)			
	Forward(At rated engine rpm) km/h (mph)	1.5-22.9 (0.93-14.22)	0-21.1 (0-13.11)	1.5-22.9 (0.93-14.22)	0-21.1 (0-13.11)
	Reverse(At rated engine rpm) km/h (mph)	1.32-20.18 (0.82-12.53)	0-14.0 (0-8.69)	1.32-20.18 (0.82-12.53)	0-14.0 (0-8.69)
Traveling speeds	Overall length (includes 3p) mm (in.)	3,103 (122.2)			
	Overall width (minimum tread) mm (in.)	1,387 (54.6)			
	Overall height (from top of ROPS) mm (in.)	2,460 (96.8)			
Dimensions	Wheel base mm (in.)	1,680 (66.1)			
	Min. ground clearance mm (in.)	351 (13.82)			
	Tread Front mm (in.)	1,105 (43.5)			
	Tread Rear mm (in.)	970-1,302 (38.2-51.3)			
Other spec.	Min. turning radius (without brake) m (Ft.)	2.9 (9.5)			
	Weight (with rops) kg (lbs.)	1,380 (3,042)	1,386 (3,055)	1,380 (3,042)	1,386 (3,055)
	Max. Drawbar load kg (lbs.)	500 (1,102)			
	Max. Trailer loading weight kg (lbs.)	1,000 (2,204)		1,000 (2,204)	

NOTE) 1. USA-only USA, EU-only Europe, AU-Australia, New zealand, etc.
2. The specifications are subject to change for the purpose of improvement without any notice.

3. SPECIFICATIONS

MODEL:CK30/CK35

Model		CK30		CK35	
		MANUAL	HST	MANUAL	HST
Engine	Model	3A150LWM	3A150LWH	3A165LWM	3A165LWH
	Type	Vertical, water-cooled, 3-cylinder diesel			
	Engine gross HP (kW)	30 (22.4)		34 (25.4)	
	P.T.O HP (kW)	23 (17.2)	22 (16.4)	27.6 (20.6)	26.5 (19.8)
	Displacement cc (cu.in)	1,500 (91.5)		1,467 (100.5)	
	Rated revolution r.p.m min-1	2,600			
	Fuel tank capacity ℓ (gal.)	30 (7.9)			
Drive train	Clutch	Dry dual	Dry single	Dry dual	Dry single
	Transmission	Synchro shuttle	Hydrostatic Drive	Synchro shuttle	Hydrostatic Drive
	Speeds	8F 8R (EU-option:16F16R)	INF.3	8F 8R (EU-option:16F16R)	INF.3
	Differential lock	Standard			
	Brake	Wet disc type			
	P.T.O	Transmission	Live	Transmission	Live
	Rear (rpm)	540 rpm at 2,520 engine rpm / (Option 1,000 rpm)			
	Mid (rpm)	(Option 2,000 rpm at 2,499 engine rpm)			
Hydraulic system	Pump	Gear (Tandem)			
	Pump capacity ℓ/min (gpm)	50.1 (13.24) / 1st : 32.9 (8.7), 2nd : 17.2 (4.54)			
	3-point hitch	Cat.I			
	Maximum lifting capacity (24in. aft of hitch) kg (lbs)	800 (1,764)			
	Hydraulic lift control system	Position control (Option : Draft, Mixed control)			
	Steering	Hydrostatic Power Steering			
Standard tire size	Front AG.(TURF,INDUSTRIAL)	7-14 (4PR), (27 x 8.50-15, 25 x 8.50-14			
	Rear AG.(TURF,INDUSTRIAL)	11.2-24, 4PR, (41 x 14.0-20, 15 x 19.5)			
	Forward(At rated engine rpm) km/h (mph)	1.5-22.9 (0.93-14.22)	0-21.1 (0-13.11)	1.5-22.9 (0.93-14.22)	0-21.1 (0-13.11)
	Reverse(At rated engine rpm) km/h (mph)	1.32-20.18 (0.82-12.53)	0-14.0 (0-8.69)	1.32-20.18 (0.82-12.53)	0-14.0 (0-8.69)
Traveling speeds	Overall length (includes 3p) mm (in.)	3,103 (122.2)			
	Overall width (minimum tread) mm (in.)	1,387 (54.6)			
	Overall height (from top of ROPS) mm (in.)	2,460 (96.8)			
Dimensions	Wheel base mm (in.)	1,680 (66.1)			
	Min. ground clearance mm (in.)	351 (13.82)			
	Tread Front mm (in.)	1,105 (43.5)			
	Tread Rear mm (in.)	1,054-1,302 (41.5-51.3)			
Other spec.	Min. turning radius (without brake) m (Ft.)	2.9 (9.5)			
	Weight (with rops) kg (lbs.)	1,380 (3,042)	1,386 (3,055)	1,380 (3,042)	1,386 (3,055)
	Max. Drawbar load kg (lbs.)	500 (1,102)			
	Max. Trailer loading weight kg (lbs.)	1,500 (3,306)		1,500 (3,306)	

NOTE) 1. USA-only USA, EU-only Europe, AU-Australia, New zealand, etc.
2. The specifications are subject to change for the purpose of improvement without any notice.

4. LUBRICANTS, FUEL AND COOLANT

To prevent serious equipment damage, use only genuine DAEDONG fluids, oils and greases, or equivalents.

No.	Locations	Capacities		Lubricants	
		MANUAL	HST		
1	Fuel	30ℓ (7.9 U.S.gal.)		No.2-D diesel fuel No.1-D diesel fuel if temperature is below -10°C (14°F)	
2	Coolant	CK25/CK27/CK35 : 7.4ℓ (2.0 U.S.gal.) CK30 : 7.8ℓ (2.1 U.S.gal.)		Fresh clean water with anti-freeze	
3	Engine crankcase	5.8ℓ (1.53 U.S.gal.)		Engine oil: API Service Classification CC or CD	
				Above 25°C (77°F)	SAE30, SAE10W-30 or 10W-40
				0 to 25°C (32 to 77°F)	SAE20, SAE10W-30 or 10W-40
				Below 0°C (32°F)	SAE10W, SAE10W-30 or 10W-40
4	Transmission case	27ℓ (7.13 U.S.gal.)	30ℓ (7.93 U.S.gal.)	Exxonmobil	Mobilfluid 423 or 424 Exxon Hydraul 560
				Shell	DONAX-TD/TD Plus
				BP	Tractran UTH
5	Front axle case	4.5ℓ (1.19 U.S.gal.)		SAE 90 gear oil or transmission case oil	
6	Greasing	No. of greasing points		Capacity	Type of grease
	Battery terminal	2		Moderate amount	Multipurpose type grease

⚠ WARNING

- ***Check the oil level regularly.***
- ***Correct the oil level, if needed, before operating.***
- ***Always check and add oil with the tractor on a flat, level surface.***
- ***To prevent personal injury, always stop the engine and set the parking brake before performing any kind of service.***

5.1 GENERAL USE SCREWS, BOLTS AND NUTS

If the tightening torques are not specified for some screws, bolts and nuts in this manual, tighten them according to the table below.

Indication on top of bolt	4 No-grade or 4T						7 7T						9 9T		
Material of bolt	SS400, S20C						S43C, S48C						SCr435, SCM435		
Material of opponent part	Ordinariness			Aluminum			Ordinariness			Aluminum			Ordinariness		
Unit / Diameter	Nm	kgf-m	lb-ft	Nm	kgf-m	lb-ft	Nm	kgf-m	lb-ft	Nm	kgf-m	lb-ft	Nm	kgf-m	lb-ft
M6 (6 mm, 0.24 in.)	7.85 ~ 9.31	0.80 ~ 0.95	5.79 ~ 6.87	7.85 ~ 8.82	0.80 ~ 0.90	5.79 ~ 6.50	9.81 ~ 11.2	1.00 ~ 1.15	7.24 ~ 8.31	7.85 ~ 8.82	0.80 ~ 0.90	5.79 ~ 6.50	12.3 ~ 14.2	1.25 ~ 1.45	9.05 ~ 10.4
M8 (8 mm, 0.31 in.)	17.7 ~ 20.5	1.8 ~ 2.1	13.1 ~ 15.1	16.7 ~ 19.6	1.7 ~ 2.0	12.3 ~ 14.4	23.6 ~ 27.4	2.4 ~ 2.8	17.4 ~ 20.2	17.7 ~ 20.5	1.8 ~ 2.1	13.1 ~ 15.1	29.5 ~ 34.3	3.0 ~ 3.5	21.7 ~ 25.3
M10 (10 mm, 0.39 in.)	39.3 ~ 45.1	4.0 ~ 4.6	29.0 ~ 33.2	31.4 ~ 34.3	3.2 ~ 3.5	23.2 ~ 25.3	48.1 ~ 55.8	4.9 ~ 5.7	35.5 ~ 41.2	39.3 ~ 44.1	4.0 ~ 4.5	29.0 ~ 32.5	60.9 ~ 70.6	6.2 ~ 7.2	44.9 ~ 52.0
M12 (12 mm, 0.47 in.)	62.8 ~ 72.5	6.4 ~ 7.4	46.3 ~ 53.5				77.5 ~ 90.2	7.9 ~ 9.2	57.2 ~ 66.5	62.8 ~ 72.5	6.4 ~ 7.4	46.3 ~ 53.5	103 ~ 117	10.5 ~ 12.0	76.0 ~ 86.7
M14 (14 mm, 0.55 in.)	108 ~ 125	11.0 ~ 12.8	79.6 ~ 92.5				124 ~ 147	12.6 ~ 15.0	91.2 ~ 108				167 ~ 704	17.0 ~ 20.0	123 ~ 144
M16 (16 mm, 0.63 in.)	167 ~ 191	17.0 ~ 19.5	123 ~ 141				197 ~ 225	20.0 ~ 23.0	145 ~ 166				260 ~ 304	26.5 ~ 31.0	192 ~ 224
M18 (18 mm, 0.71 in.)	246 ~ 284	25.0 ~ 29.0	181 ~ 209				275 ~ 318	28.0 ~ 32.5	203 ~ 235				344 ~ 402	35.0 ~ 41.0	254 ~ 296
M20 (20 mm, 0.79 in.)	334 ~ 392	34.0 ~ 40.0	246 ~ 289				368 ~ 431	37.5 ~ 44.0	272 ~ 318				491 ~ 568	50.0 ~ 58.0	362 ~ 419

5.2 STUD BOLTS

Material of opponent part	Ordinariness			Aluminum		
Unit / Diameter	Nm	kgf-m	lb-ft	Nm	kgf-m	lb-ft
M8 (8 mm, 0.31 in.)	11.8 ~ 15.6	1.2 ~ 1.6	8.68 ~ 11.5	8.82 ~ 11.8	0.90 ~ 1.2	6.51 ~ 8.67
M10 (10 mm, 0.39 in.)	24.6 ~ 31.3	2.5 ~ 3.2	18.1 ~ 23.1	19.7 ~ 25.4	2.0 ~ 2.6	14.5 ~ 18.8
M12 (12 mm, 0.47 in.)	29.5 ~ 49.0	3.0 ~ 5.0	21.7 ~ 36.1	31.4	3.2	23.1

5.3 AMERICAN STANDARD SCREWS, BOLTS AND NUTS WITH UNC OR UNF THREADS

Grade / Unit / Nominal diameter	SAE GR.5			SAE GR.8		
	Nm	kgf-m	lb-ft	Nm	kgf-m	lb-ft
5/16	23.1 ~ 27.8	2.35 ~ 2.84	17.0 ~ 20.5	32.5 ~ 39.3	3.31 ~ 4.01	24.0 ~ 29.0
3/8	47.5 ~ 57.0	4.84 ~ 5.82	35.0 ~ 42.0	61.0 ~ 73.2	6.22 ~ 7.47	45.0 ~ 54.0
1/2	108.5 ~ 130.2	11.07 ~ 13.29	80.0 ~ 96.0	149.2 ~ 179.0	15.22 ~ 18.27	110.0 ~ 132.0
9/16	149.2 ~ 179.0	15.22 ~ 18.27	110.0 ~ 132.0	217.0 ~ 260.4	22.14 ~ 26.57	160.0 ~192.0
5/8	203.4 ~ 244.1	20.75 ~ 24.91	150.0 ~ 180.0	298.3 ~ 358.0	30.44 ~ 36.53	220.0 ~ 264.0

6. UNIT CONVERSION TABLE

Torque			Length		Volume		Pressure			Temperature	
Kgf-m	Nm	lb-ft	Inch	mm	ℓ	U.S.gal	kgf/cm²	kPa	PSI	°C	°F
1	9.8	7.2	1	25.4	1	0.26418	1	98	14.22	-20	-4
2	19.6	14.5	2	50.8	2	0.5	10	980	142.2	-15	5
3	29.4	21.7	3	76.2	4	1.1	20	1960	284.4	-10	14
4	39.2	28.9	4	101.6	6	1.6	30	2940	426.6	-5	23
5	49	36.2	5	127	8	2.1	40	3920	568.8	0	32
6	58.8	43.4	6	152.4	10	2.6	50	4900	711	5	41
7	68.6	50.6	7	177.8	12	3.2	60	5880	853.2	10	50
8	78.4	57.9	8	203.2	14	3.7	70	6860	995.4	15	59
9	88.2	65.1	9	228.6	16	4.2	80	7840	1137.6	20	68
10	98	72.3	10	254	18	4.8	90	8820	1279.8	25	77
11	107.8	79.6	11	279.4	20	5.3	100	9800	1422	30	86
12	117.6	86.8	12	304.8	22	5.8	110	10780	1564.2	35	95
13	127.4	94.0	13	330.2	24	6.3	120	11760	1706.4	40	104
14	137.2	101.3	14	355.6	26	6.9	130	12740	1848.6	45	113
15	147	108.5	15	381	28	7.4	160	15680	2275.2	50	122
16	156.8	115.7	16	406.4	30	7.9	170	16660	2417.4	55	131
17	166.6	123.0	17	431.8	32	8.5	180	17640	2559.6	60	140
18	176.4	130.2	18	457.2	34	9.0	190	18620	2701.8	65	149
19	186.2	137.4	19	482.6	36	9.5	200	19600	2844	70	158
20	196	144.7	20	508	38	10.0	225	22050	3199.5	75	167
21	205.8	151.9	21	533.4	40	10.6	250	24500	3555	80	176
22	215.6	159.1	22	558.8	42	11.1	275	26950	3910.5	85	185
23	225.4	166.4	23	584.2	44	11.6	300	29400	4266	90	194
24	235.2	173.6	24	609.6	46	12.2	325	31850	4621.5	95	203
25	245	180.8	25	635	48	12.7	350	34300	4977	100	212

7. MAINTENANCE SCHEDULE CHART

No.	Item \ Maintenance interval		Run hour								Run age		Remarks	
			50	100	200	400	600	800	1500	3000	1 year	2 year		
1	Engine oil	Change	⊙	●										
2	Engine oil filter	Replace	⊙		●									
3	Transmission oil filter	Replace	⊙		●									
4	HST oil filter	Replace	⊙		●									
5	Transmission fluid	Change	⊙			●								
6	Front axle oil	Change	⊙			●								
7	Front axle pivot	Adjust					●							
8	Engine start system	Check	●											
9	Greasing	Apply	●											
10	Wheel bolt torque	Check	●											
11	Battery condition	Check		●									*3	
12	Air cleaner element	Clean		●									*1	#
		Replace									●		*2	
13	Fuel filter element	Replace			●									#
14	Fan belt	Adjust		●									*3	
15	Clutch pedal free play	Adjust	⊙	●										
16	Brake pedal free play	Adjust		●										
17	Radiator hose and clamp	Check			●									
		Replace										●		
18	Power steering hose and oil line	Check			●									
		Replace										●		
19	Fuel line	Check		●										#
		Replace										●		
20	Intake air hose	Check			●									
		Replace										●	*3	
21	Toe-in	Adjust			●									
22	Engine valve clearance	Adjust						●						
23	Fuel injection nozzle injection pressure	Check							●					#
24	Injection pump	Check								●				#
25	Cooling system	Clean										●		
26	Coolant	Replace										●		
27	Fuel system	Check											*3	
28	Fuse	Replace											*3	
29	Light bulb	Replace											*3	
30	Tire pressure	Check											*3	

IMPORTANT FOR INTERVAL

- ***⊙ must be performed after the initial 50 hours of operation.***

  ****1 The air cleaner should be cleaned more frequently a in dusty condition than in a normal condition.***

  ****2 Every year or every 5 times of cleaning.***

  ****3 Replace only if necessary.***

- ***The items listed above (# marked) are registered as emission related critical parts by DAEDONG in the U.S.EPA exhaust emission standards non-road emission regulation. As the engine owner, you are responsible for the performance of the required maintenance on the engine according to the above instruction.***

8. CHECK AND MAINTENANCE

8.1 DAILY CHECK

For your own safety and maximum service life of the machine, make a thorough daily inspection before operating the machine to start the engine.

CAUTION

To avoid personal injury:

- ***Be sure to check and service the tractor on a flat place with the engine shut off and the parking brake "ON".***

A. WALK AROUND INSPECTION

Look around and under the tractor for such items as loose bolts, trash build-up, oil or coolant leaks, broken or worn parts.

8.1.1 CHECKING AND REFUELING

Fuel tank capacity	30 ℓ (7.9 U.S.gal.)

CAUTION

To avoid personal injury:

- ***Do not smoke while refueling.***
- ***Be sure to stop the engine before refueling.***

1. Turn the key switch to "ON", check the amount of fuel showing on the fuel gauge.
2. Fill fuel tank when the fuel gauge shows 1/4 or less fuel in the tank.
3. Use No.2-Diesel fuel at all temperatures above -10°C (14°F).

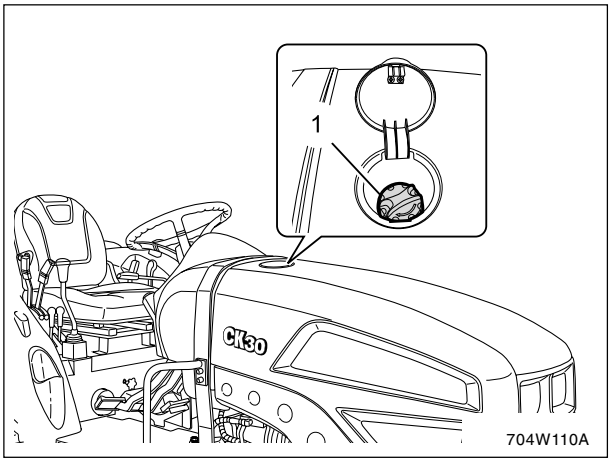

(1) Fuel Tank Cap

IMPORTANT

- ***Do not permit dirt or trash to get into the fuel system.***
- ***Be careful not to let the fuel tank become empty, otherwise air will enter the fuel system, requiring the fuel system to be bled before next engine start.***
- ***Be careful not to spill during refueling. If a spill should occur, wipe it off at once. Fuel on the tractor may cause a fire.***
- ***To prevent condensation(water) accumulation in the fuel tank, fill the tank before parking the tractor overnight.***

NOTE:

- *No.2-D is a distillate fuel of lower volatility for engines in industrial and heavy mobile service. (SAE J313 JUN 87)*
- *Grade of Diesel Fuel Oil According to ASTM D975*

Flash Point °C (°F)	Water and Sediment, Volume %	Carbon Residue On, 10 Percent Residuum, %	Ash, Weight %
Min	Max	Max	Max
52 (125)	0.05	0.35	0.01

Distillation Temperatures, °C (°F) 90% Point		Viscosity Kinematic cSt or mm²/s at 40°C		Viscosity Saybolt, SUS at 100°F		Sulfur, Weight %	Copper Strip Corrosion	Cetane Number
Min	Max	Min	Max	Min	Max	Max	Max	Min
282 (540)	338 (640)	1.9	4.1	32.6	40.1	0.50	No.3	40

8.1.2 CHECKING ENGINE OIL LEVEL

IMPORTANT

- ***When using an oil of different maker or viscosity from the previous one, remove all of the old oil. Never mix two different types of oil.***
- ***Never run engine is the oil level is low.***

CAUTION

To avoid personal injury:

- ***Be sure to stop the engine before checking the oil level.***

1. Park the machine on a flat surface.
2. Check the engine oil before starting the engine or 5 minutes or more after the engine has stopped.
3. To check the oil level, draw out the dipstick, wipe it clean, replace it, and draw it out again. Check to see that the oil level is between the two notches. If the level is too low, add new oil to the prescribed level at the oil inlet.

   (See “LUBRICANTS” in Maintenance Section)

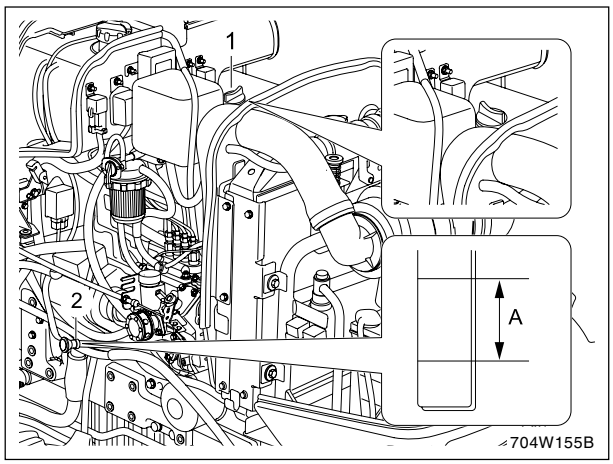

(1) Oil Inlet

(2) Dipstick

(A) Oil Level is Acceptable Within this Range

8.1.3 CHECKING COOLANT LEVEL

CAUTION

To avoid personal injury:

- ***Do not remove the radiator cap while coolant is hot. When cool, slowly rotate cap to the first stop and allow ample time for excess pressure to escape before removing the cap completely.***

1. Make sure to see that the coolant level is between the “FULL” and “LOW” marks of recovery tank.
2. When the coolant level drops due to evaporation, add water only up to the full level.

   In case of leakage, add anti-freeze and water in the specified mixing ration up to the full level.

   (See “Flush Cooling System and Changing Coolant” in every 2 yours maintenance.)

IMPORTANT

- ***If the radiator cap has to be removed, follow the caution above and securely retighten the cap.***
- ***Use clean, fresh water and anti-freeze to fill the recovery tank.***
- ***If water should leak, consult your local DAEDONG Dealer.***

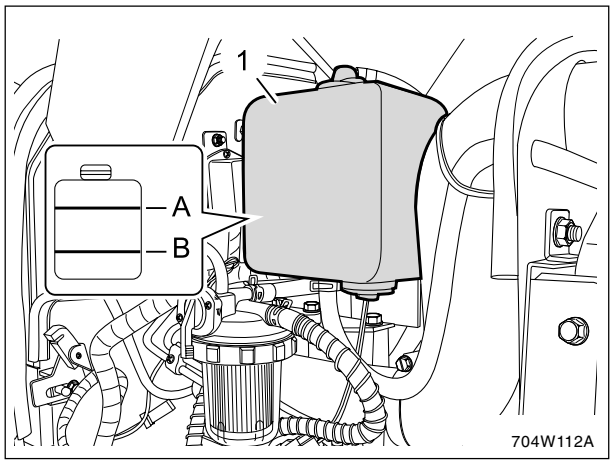

(1) Recovery Tank (A) FULL

(B) LOW

8.1.4 CHECKING HEAD LIGHT, HAZARD LIGHT, ETC.

1. Inspect the lights for broken bulbs and lenses.
2. Replace if broken.

8.1.5 CHECKING SEAT BELT AND ROPS

1. Always check condition of seat belt and **ROPS** attaching hardware before operating tractor.
2. Replace if damaged.

8.1.6 CLEANING GRILL, RADIATOR SCREEN AND OIL COOLER SCREEN

CAUTION

To avoid personal injury:

- ***Be sure to stop the engine before removing the screen.***

1. Check the front grill and the side screens to be sure they are clean of any debris.
2. Detach the screen and eliminate all the foreign material.

IMPORTANT

- ***Grill and screen must be clean from debris to keep the engine from overheating and to allow good air intake to the air cleaner.***

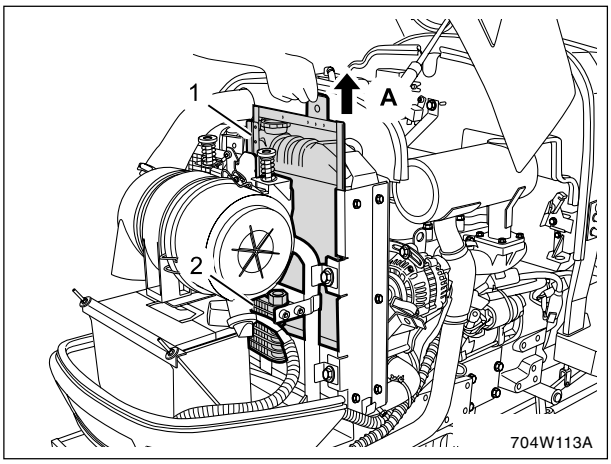

(1) Radiator Screen
(2) Oil Cooler Screen
(A) DETACH

8.1.7 CHECKING BRAKE PEDALS AND CLUTCH PEDAL

1. Examine the brake and clutch pedals for free travel, and smooth operation.
2. Adjust if free travel is not within specifications:
   (See “Adjusting Clutch and Brake Pedal” in every 100 hours maintenance.)

NOTE:

Brake pedals should be equal when depressed.

8.1.8 CHECKING GAUGES, METER AND EASY CHECKER

1. Examine the instrument panel for broken gauge(s), meter(s) and Easy Checker lamps.
2. Replace if broken.

8.2 EVERY 50 HOURS

8.2.1 LUBRICATING GREASE FITTINGS

Apply a small amount of multipurpose grease to the following points every 50 hours:

If you operated the machine in extremely wet and muddy conditions, lubricate grease fittings more often.

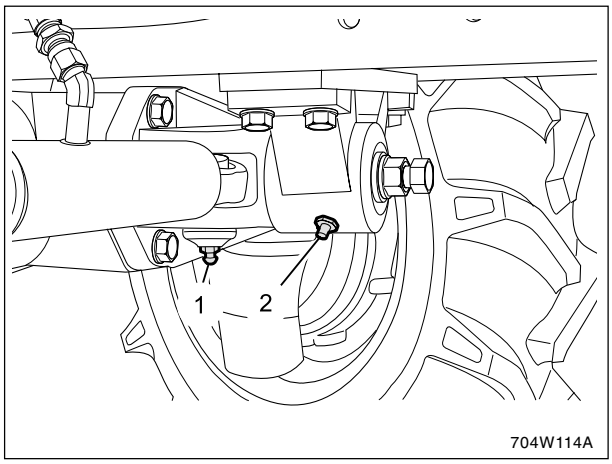

(1) Grease Fitting (Power Steering Cylinder) (RH, LH)
(2) Grease Fitting (Front Bracket)

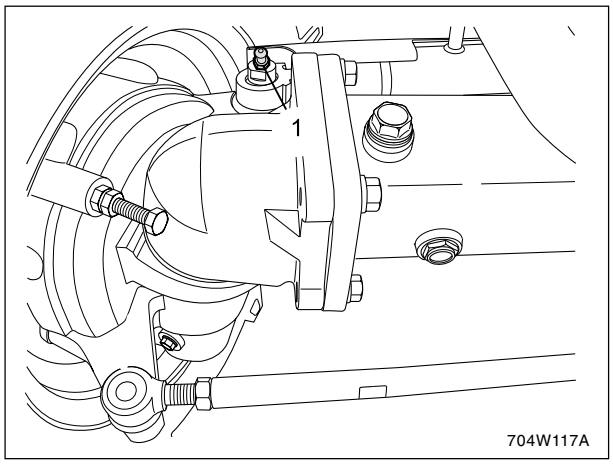

(1) Grease Fitting (Power Steering Cylinder) (RH, LH)

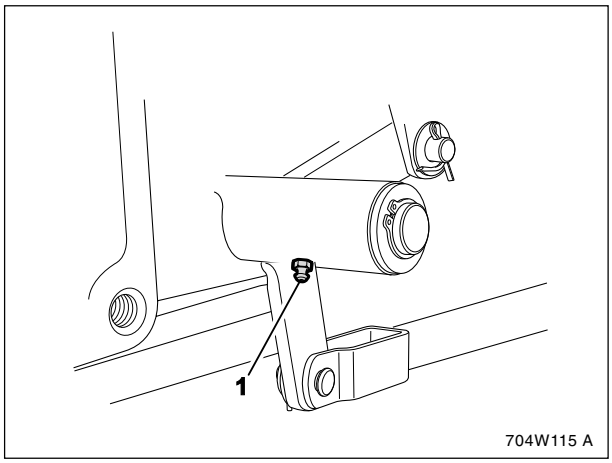

(1) Grease Fitting (Brake Lever) (RH, LH)

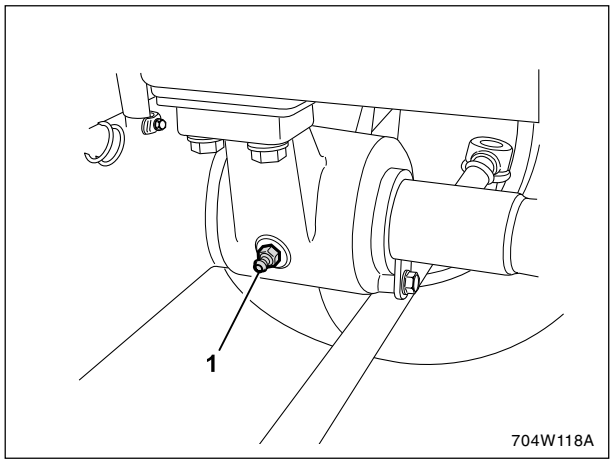

(1) Grease Fitting (Rear Bracket)

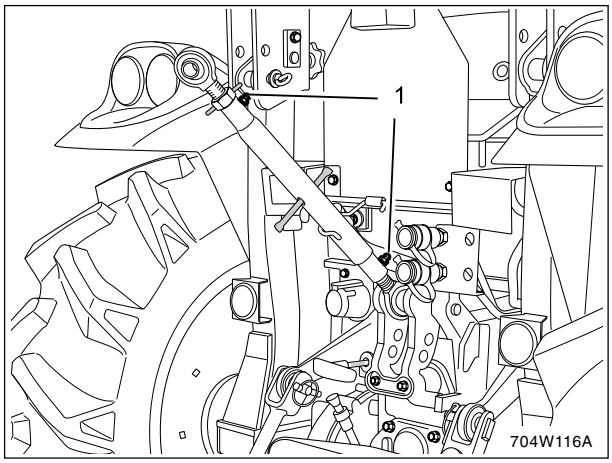

(1) Grease Fitting (Top Link)

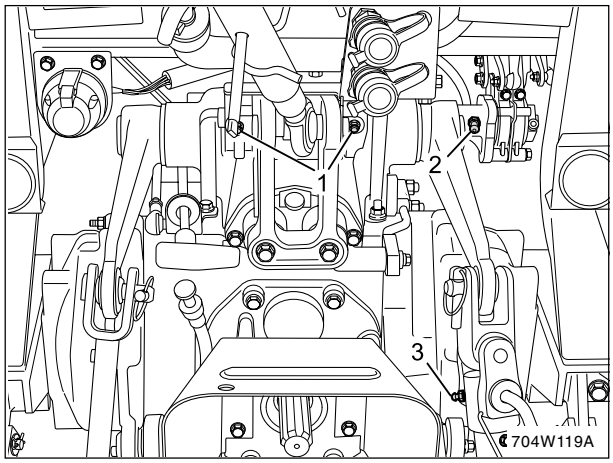

(1) Hydraulic Cylinder (3) Lift Rod
(2) Hydraulic Cylinder Support

8.2.2 CHECKING WHEEL BOLT TORQUE

CAUTION

To avoid personal injury:

- ***Never operate tractor with a loose rim, wheel, or axle.***
- ***Any time bolts and nuts are loosened, retighten to specified torque.***
- ***Check all bolts and nuts frequently and keep them tight.***

Check wheel bolts and nuts regularly especially when new. If they are loose, tighten them as follows.

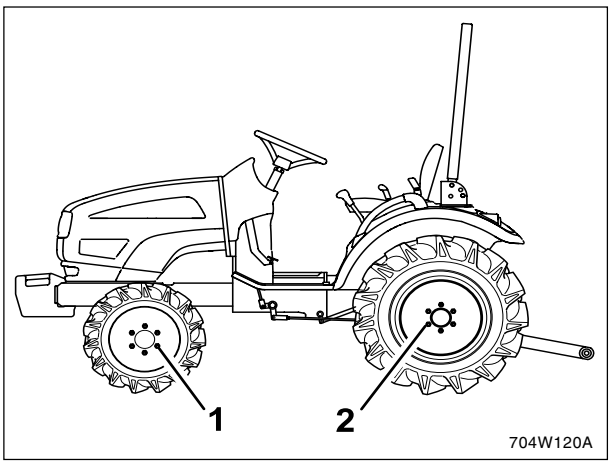

(1) 68.6 Nm (7 kgf-m, 50.6 lb-ft)

(2) 284 Nm (29 kgf-m, 209.7 lb-ft)

8.3 EVERY 100 HOURS

8.3.1 CHANGING ENGINE OIL

CAUTION

To avoid personal injury:

- ***Be sure to stop the engine before changing the oil.***
- ***Allow engine to cool down sufficiently, oil can be hot and can burn.***

1. To drain the used oil, remove the drain plug at the bottom of the engine and drain the oil completely into the oil pan.

   All the used oil can be drained out easily when the engine is still warm.
2. After draining reinstall the drain plug.
3. Fill with the new oil up to the upper notch on the dipstick.

Oil capacity with filter	5.8ℓ (1.53 U.S.gal.)

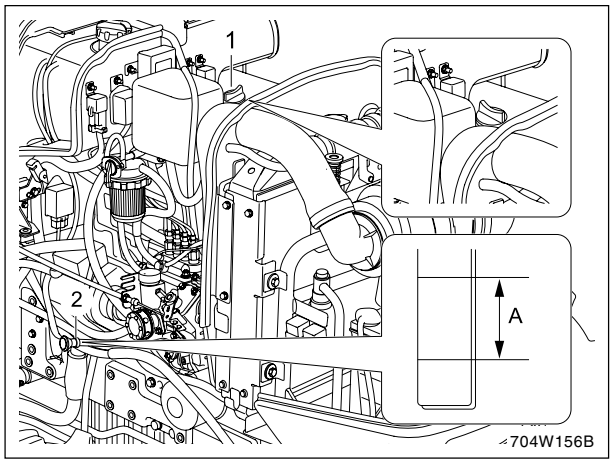

(1) Oil Inlet

(2) Dipstick

(A) Oil Level is Acceptable Within this Range

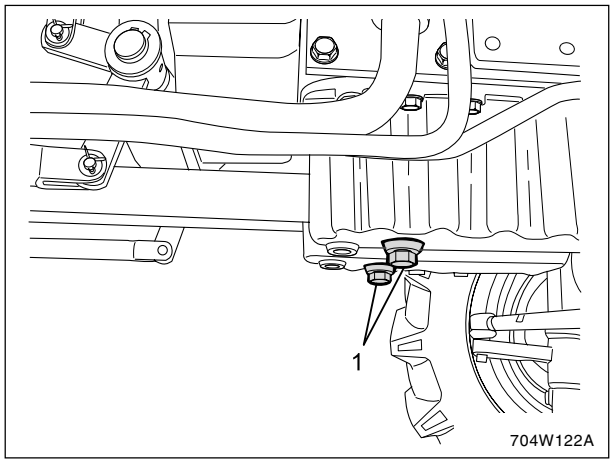

(1) Drain Plug

8.3.2 CHECKING FUEL LINE

1. Check to see that all lines and hose clamps are tight and not damaged.
2. If hoses and clamps are found worn or damaged, replace or repair them at once.

NOTE:

- *If the fuel line is removed, be sure to properly bleed the fuel system. (See "Bleeding Fuel System" in as required maintenance)*

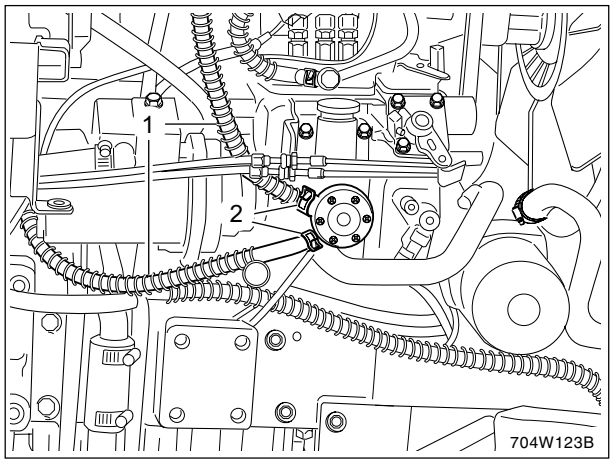

(1) Fuel Lines (2) Clamp Bands

8.3.3 CLEANING AIR CLEANER PRIMARY ELEMENT

1. Remove the air cleaner cover and element.
2. Clean the element:
   - When dry dust adheres to the element, blow compressed air from the inside, turning the element. The compressed air pressure must be below 686 kPa (7 kgf/cm^3, 99 psi).
   - When carbon or oil adheres to the element, soak the element in detergent for 15 minutes then wash it several times in water, rinse with clean water and dry it naturally. After element in fully dried, inspect inside of the element with a light and check if it is damaged or not.
3. Replace air cleaner element:

   Once yearly or after every sixth cleaning, whichever comes first.

NOTE:

- *Check to see if the evacuator valve is blocked with dust.*

IMPORTANT

- ***The air cleaner uses a dry element, never apply oil.***
- ***Do not run the engine with the filter element removed.***
- ***Be sure to refit the cover with the arrow Ç (on the rear of cover) upright. If the cover is improperly fitted, evacuator valve will not function and dust will adhere to the element.***
- ***Do not touch the secondary element except in cases where replacing is required.***

  (See "Replacing Air Cleaner Secondary Element" in Every 1 Year maintenance.)

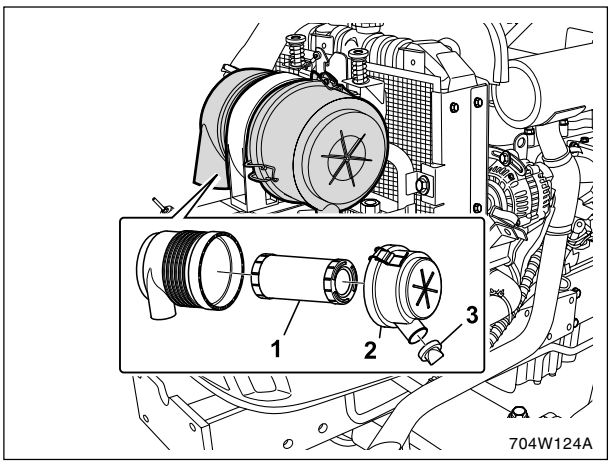

(1) Element
(2) Cover
(3) Evacuator Valve

8.3.4 EVACUATOR VALVE

Open the evacuator valve once a week under ordinary conditions - or daily when used in a dusty place - to get rid of large particles of dust and dirt.

8.3.5 ADJUSTING CLUTCH PEDAL

1. Stop the engine and remove the key.
2. Slightly depress the clutch pedal and measure free travel at top of pedal stroke.
3. If adjustment is needed, loosen the lock nut, remove the clevis pin and adjust the rod length within acceptable limits.
4. Retighten the lock nut and split the cotter pin.

Proper clutch pedal free travel	20 ~ 30 mm (0.8 ~ 1.2 in.) on the pedal

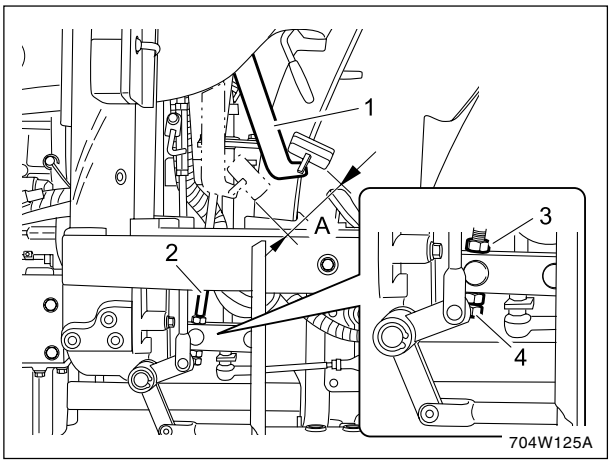

(1) Clutch Rod
(2) Nut
(A) Free Travel

8.3.6 ADJUSTING BRAKE PEDAL

CAUTION

To avoid personal injury:

- ***Stop the engine and chock the wheels before checking brake pedal.***

1. Release the parking brake.
2. Slightly depress the brake pedals and measure free travel at top of pedal stroke.
3. If adjustment is needed, loosen the lock nut and turn the turnbuckle to adjust the rod length within acceptable limits.
4. Retighten the lock nut.

Proper brake pedal free travel	20 ~ 30 mm (0.8 ~ 1.2 in.) on the pedal.
	Keep the free travel in the right and left brake pedals equal.

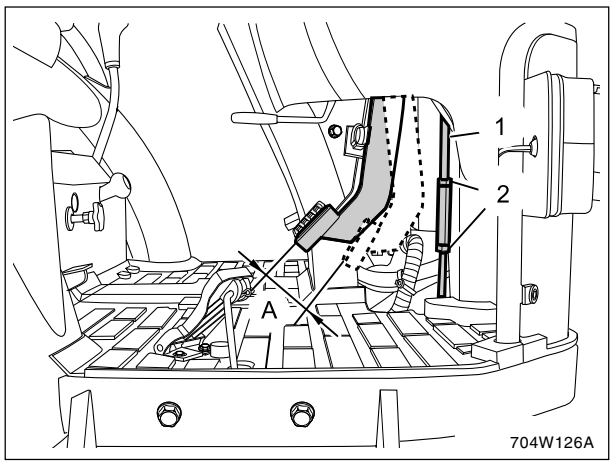

(1) Lock Nut
(2) Turnbuckle
(A) Free Travel

8.3.7 CLEANING FUEL FILTER

IMPORTANT

- ***If dust and dirt enters the fuel system, the fuel pump and injection nozzles are subject to premature wear. To prevent this, be sure to clean the fuel filter bowl and element periodically.***

This job should not be done in the field, but in a clean place.

1. Close the fuel cock.
2. Unscrew the screw ring and remove the filter bowl, and rinse the inside with kerosene.
3. Take out the element and dip it in kerosene to rinse.
4. After cleaning, reassemble the fuel filter, keeping out dust and dirt.
5. Bleed the fuel system.
   (See “Bleeding Fuel System” in service as required)

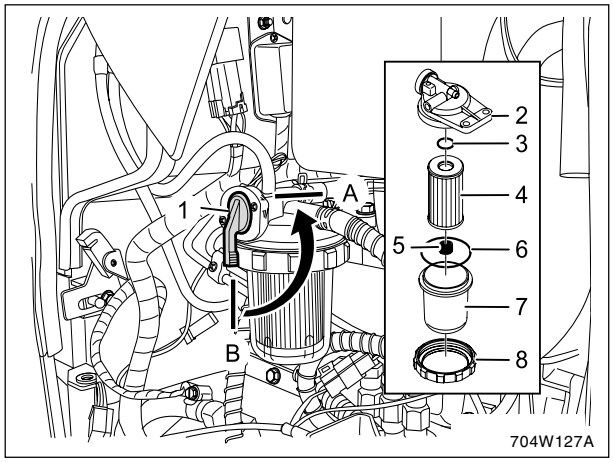

(1) Fuel Cock
(2) Fuel Filter Bowl
(3) O-ring
(4) Filter Element
(A) Close
(5) Spring
(6) O-ring
(7) Filter Bowl
(8) Screw Ring
(B) Open

8.3.8 ADJUSTING FAN BELT TENSION

CAUTION

To avoid personal injury:

- ***Be sure to stop the engine before checking belt tension.***

Proper fan belt tension	A deflection of between 8 mm (0.32 in.) when the belt is pressed in the middle of the span.

1. Stop the engine and remove the key.
2. Apply moderate thumb pressure to belt between pulleys.
3. If tension is incorrect, loosen the alternator mounting bolts and, using a lever placed between the alternator and the engine block, pull the alternator out until the deflection of the belts falls within acceptable limits.
4. Replace fan belt if it is damaged.

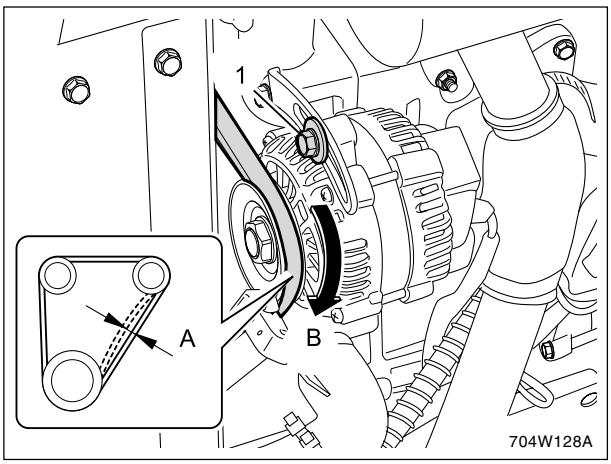

(1) Bolt

(A) Check the Belt Tension

(B) To Tighten

8.3.9 BATTERY

CAUTION

To avoid personal injury:

- ***Never remove the vent caps while the engine is running.***
- ***Keep electrolyte away from eyes, hands and clothes. If you are spattered with it, wash it away completely with water immediately and get medical attention.***
- ***Wear eye protection and rubber gloves when working around the battery.***

Mishandling the battery shortens the service life and adds to maintenance costs.

The original battery is maintenance free, but needs some servicing.

If the battery is weak, the engine will be difficult to start and the lights will be dim. It is important to check the battery periodically.

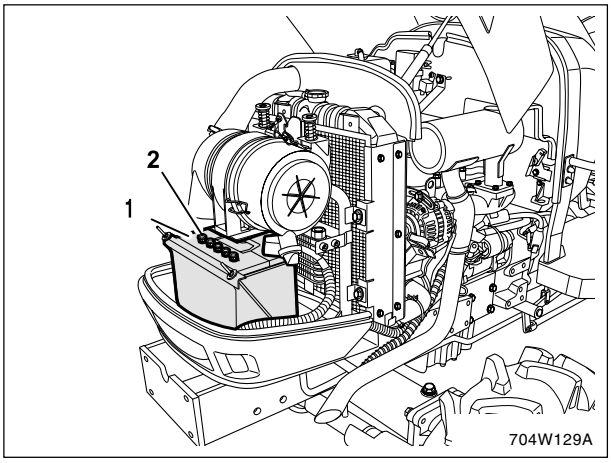

(1) Battery (2) Vent Cap

A. BATTERY CHARGING

CAUTION

To avoid personal injury:

- ***When the battery is being activated, hydrogen and oxygen gases in the battery are extremely explosive. Keep open sparks and flames away from the battery at all times, especially when charging the battery.***
- ***When charging the battery, ensure the vent caps are securely in place. (If equipped)***
- ***When disconnecting the cable from the battery, start with the negative terminal first.***
- ***When connecting the cable to the battery, start with the positive terminal first.***
- ***Never check battery change by placing a metal object across the posts. Use a voltmeter or hydrometer.***

1. Make sure each electrolyte level is somewhere between the markings (A) and (B). Add a proper amount of distilled water up to the highest level as required.
2. The water in the electrolyte evaporates during recharging. Liquid shortage damages the battery. Excessive liquid spills over and damages the tractor body.
3. To slow charge the battery, connect the battery positive terminal to the charger positive terminal and the negative to the negative, then recharge in the standard fashion.
4. A boost charge is only for emergencies. It will partially charge the battery at a high rate and in a short time.

   When using a boost-charged battery, it is necessary to recharge the battery as early as possible.

   Failure to do this will shorten the battery's service life.
5. When the specific gravity of electrolyte is between 1. 27 and 1.29 the charging is completed.
6. When exchanging an old battery for a new one, use battery of equal specification shown in table 1.

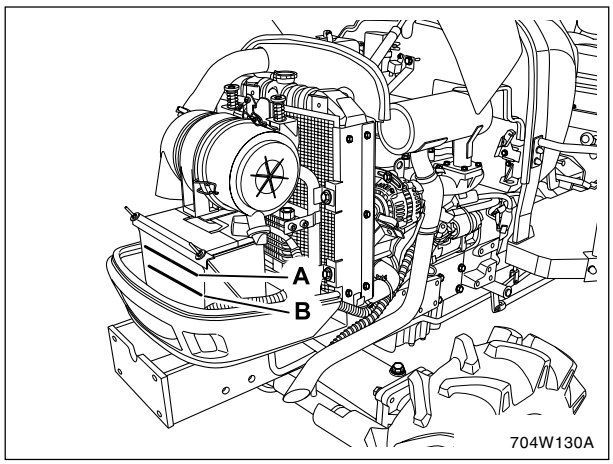

(A) Highest Level

(B) Lowest Level

B. TABLE 1

Tractor model	Battery TYPE	Volts (v)	Capacity at 20HR (A.H)
CK25/27 CK30/35	535MF(USA) Delkor DF650(EU)	12	80

C. DIRECTION FOR STORAGE

1. When storing the tractor for a long period, remove the battery from tractor, adjust the electrolyte to the proper level and store in a dry place out of direct sunlight.
2. The battery self-discharges while it is stored.

   Recharge it once every three months in hot seasons and once every six months in cold seasons.

8.4 EVERY 200 HOURS

8.4.1 REPLACING FUEL FILTER

IMPORTANT

- ***If dust and dirt enters the fuel system, the fuel pump and injection nozzles are subject to premature wear. To prevent this, be sure to clean the fuel filter bowl and element periodically.***

This job should not be done in the field, but in a clean place.

1. Close the fuel cock.
2. Unscrew the screw ring and remove the filter bowl.
3. Replace the element with new one.
4. Bleed the fuel system as needed.

   (See “8.10 Bleeding Fuel System” in service as required)

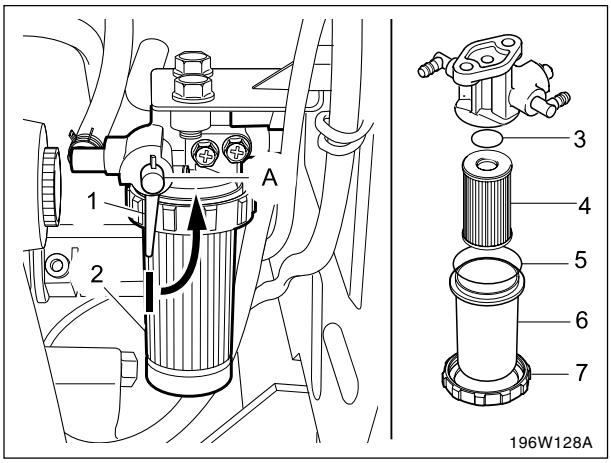

(1) Fuel Cock
(2) Fuel Filter Bowl
(3) O-ring
(4) Filter Element
(5) Spring
(6) Filter Bowl
(7) Screw Ring
(A) Close

8.4.2 REPLACING ENGINE OIL FILTER

IMPORTANT

- ***To prevent serious damage to the engine, use only a DAEDONG genuine filter.***

CAUTION

To avoid personal injury:

- ***Be sure to sop the engine before changing oil filter cartridge.***
- ***Allow engine to cool down sufficiently, oil can be hot and can burn.***

1. Remove the oil filter.
2. Put a film of clean engine oil on the rubber seal of the new filter.
3. Tighten the filter quickly until it contacts the mounting surface.

   Tighten filter by hand an additional half turn only.
4. After the new filter has been replaced, the engine oil normally decreases a little. Make sure that the engine oil does not leak through the seal and be sure to check the oil level on the dipstick. Then, replenish the engine oil up to the prescribed level.

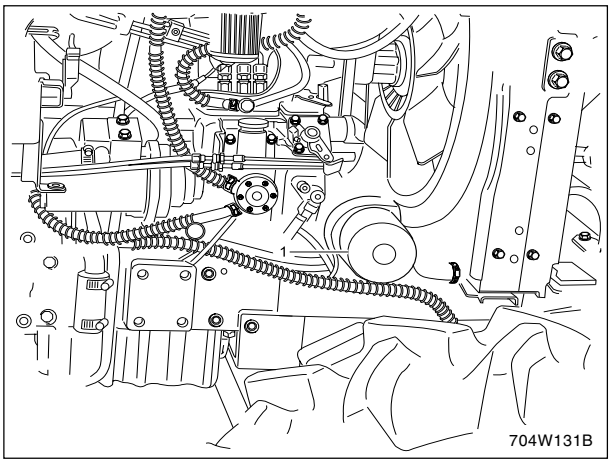

(1) Engine Oil Filter

8.4.3 REPLACING HYDRAULIC OIL FILTER & TRANSMISSION OIL FILTER (HST TYPE)

CAUTION

To avoid personal injury:

- ***Be sure to stop the engine before changing the oil filter cartridge.***
- ***Allow engine to cool down sufficiently, oil can be hot and can burn.***

1. Remove the drain plug at the bottom of the transmission case and drain the oil completely into the oil pan.
2. After draining reinstall the drain plug.

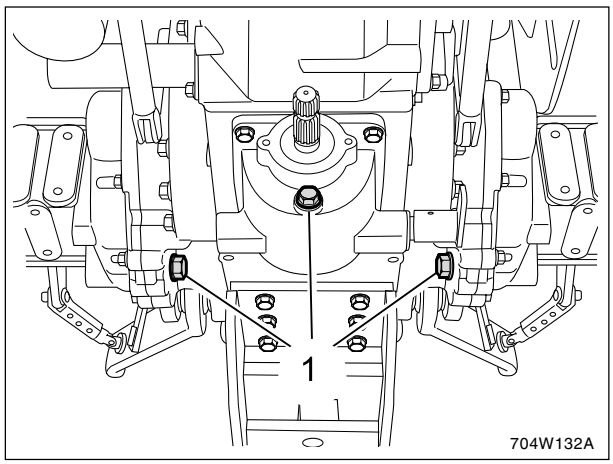

(1) Drain Plugs

3. Remove the oil filter.
4. Put a film of clean transmission oil on the rubber seal of the new filter.
5. Tighten the filter quickly until it contacts the mounting surface.
   Tighten the filter by hand an additional half turn only.

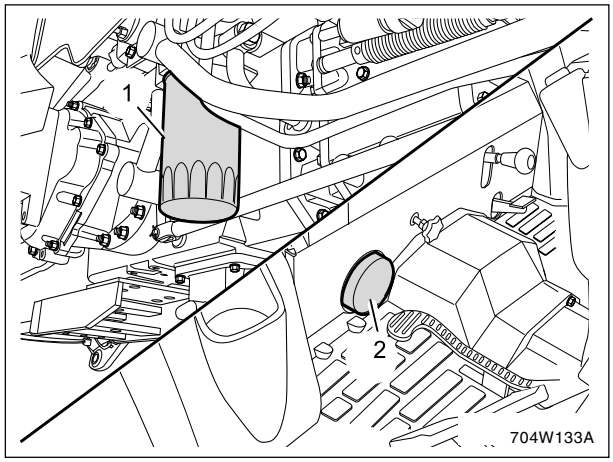

(1) Hydraulic Oil Filter

(2) Transmission Oil Filter (HST TYPE)

6. After the new filter has been replaced, fill with oil up to the upper line of the gauge.
7. After running the engine for a few minutes, stop it and check the oil level again, add oil to the prescribed level.
8. Make sure that the transmission fluid doesn't leak through the seal.

IMPORTANT

- ***To prevent serious damage to the hydraulic system, use only a DAEDONG genuine filter.***

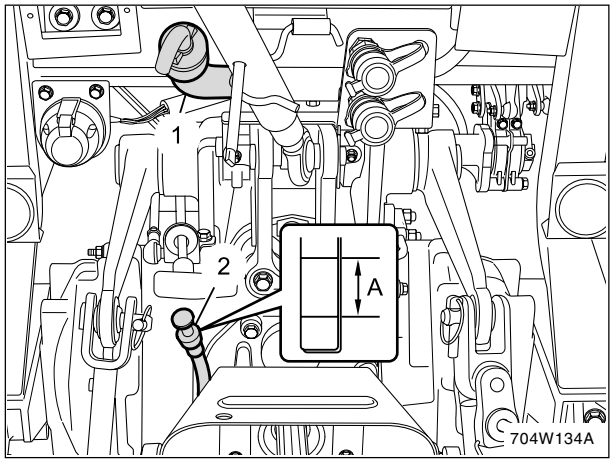

(1) Oil Inlet

(2) Gauge

(A) Oil Level is Acceptable Within this Range

8.4.4 CHECKING RADIATOR HOSE AND CLAMP

Check to see if radiator hoses are properly fixed every 200 hours of operation or six months, whichever comes first.

1. If hose clamps are loose, or water leaks, tighten the clamps securely.
2. Check radiator hoses. If hoses are swollen, hardened, or cracked, replace both the hose and the related clamps, and tighten securely.

Replace hoses and hose clamps every 2 years or earlier if checked and found that hoses are swollen, hard ened or cracked.

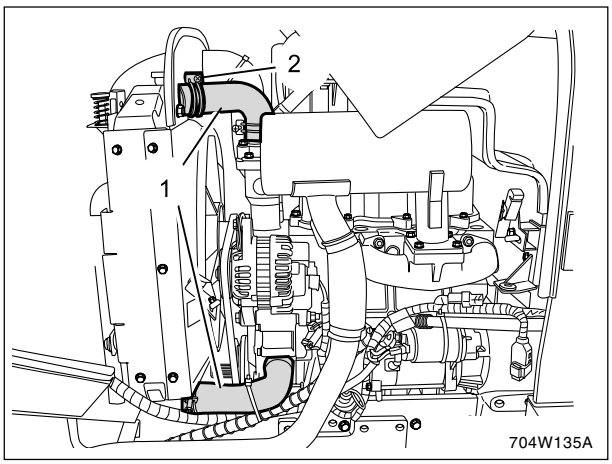

(1) Radiator Hoses (2) Clamp

A. PRECAUTION AT OVERHEATING

Take the following actions in the event of engine “overheating”, an event that occurs when the engine coolant temperature is equal to or greater than it’s boiling point.

1. Stop operating any implement to remove the load on the engine.
2. Don’t stop the engine suddenly, but stop it after about 5 minutes of unloaded idling.
3. Keep yourself well away from the machine for another 10 minutes or until the steam has stopped blowing out of the engine.
4. Allow the engine to cool sufficiently, before servicing the engine. Then follow the manual’s “ Troubleshooting” section to find and repair the cause of the overheating. Do not start the engine again until all repairs are made.

8.4.5 ADJUSTING TOE-IN

1. Park tractor on a flat surface.
2. Turn the steering wheel so front wheels are in the straight ahead position.
3. Lower the implement, lock the park brake and stop the engine.
4. Measure the distance between tire beads at front of tire, hub height.
5. Measure the distance between tire beads at rear of tire, hub height.
6. The front distance should be 2 to 8 mm less than rear distance. If not, adjust the tie rod length.

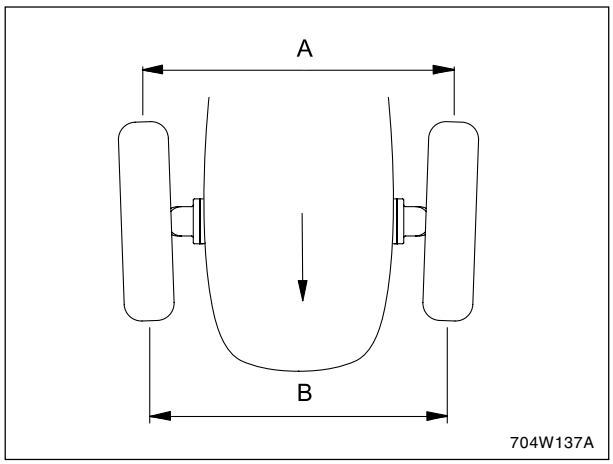

(A) Wheel - to - Wheel Distance at Rear

(B) Wheel - to - Wheel Distance at Front

A. ADJUSTING PROCEDURE

1. Loosen the lock nut and turn the turnbuckle to adjust the rod length until the proper toe-in measurement is obtained.
2. Retighten the lock nut.

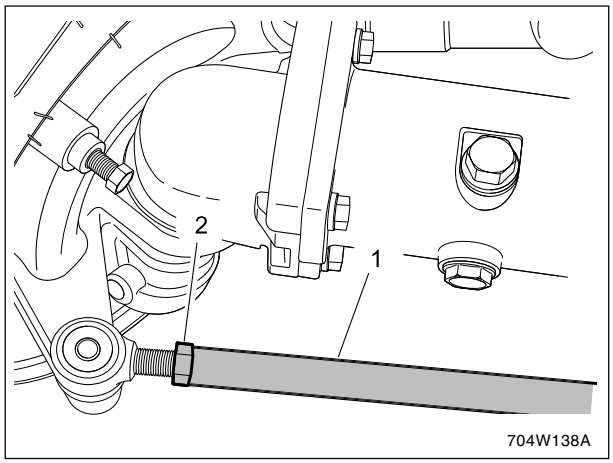

(1) Tie Rod (2) Lock Nuts

8.5 EVERY 400 HOURS

8.5.1 CHANGING TRANSMISSION FLUID

CAUTION

To avoid personal injury:

- ***Allow engine to cool down sufficiently, oil can be hot and can burn.***

1. To drain the used oil, remove the drain plug at the bottom of the transmission case and drain the oil completely into the oil pan.
2. After draining reinstall the drain plug.
3. Fill with the new **DAEDONG** TF65 fluid up to the upper line of the gauge.
   (See “LUBRICANTS” in Maintenance Section)
4. After running the engine for a few minutes, stop it and check the oil level again; add oil to prescribed level.

Oil capacity	HST	30 ℓ (7.93 U.S.gal.)
	MANUAL	27 ℓ (7.13 U.S.gal.)

IMPORTANT

- ***Do not operate the tractor immediately after changing the transmission fluid.***
  Run the engine at medium speed for a few minutes to prevent damage to the transmission.

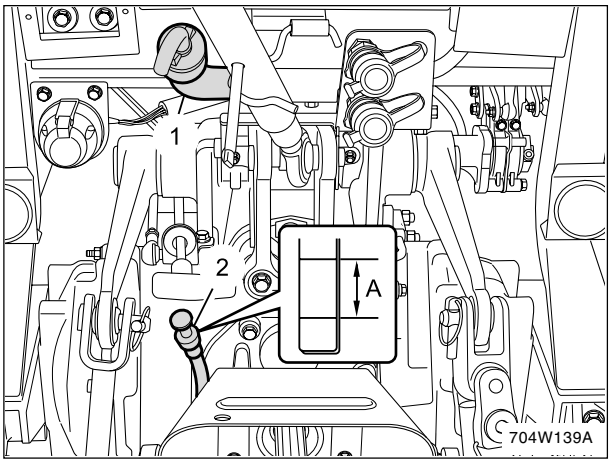

(1) Oil Filling Plug (2) Gauge
(A) Oil Level is Acceptable Within this Range

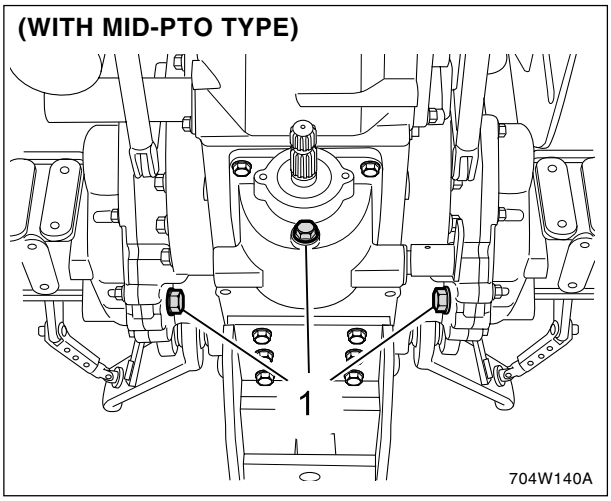

(1) Drain Plugs

8.5.2 REPLACING FUEL FILTER ELEMENT

(See “Replacing fuel filter” in every 200 hours maintenance.)

8.5.3 CHANGING FRONT AXLE CASE OIL

1. To drain the used oil, remove the right and left drain pugs and filling plug at the front axle case and drain the oil completely into the oil pan.
2. After draining reinstall the drain plugs.
3. Remove the oil level check plug.
4. Fill with the new oil up to the check plug port.
   (See “LUBRCANTS” in Maintenance Section)
5. After filling reinstall the filling plug and check plug.

Oil capacity	4.5 ℓ (1.19 U.S.gal.)

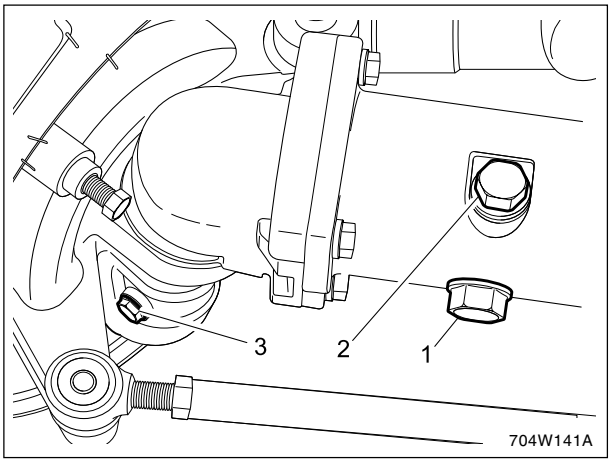

(1) Check Plug (3) Drain Plug
(2) Filling Plug

8.6 EVERY 600 HOURS

8.6.1 ADJUSTING FRONT AXLE PIVOT

If the front axle pivot pin adjustment is not correct, front wheel vibration can occur causing vibration in the steering wheel.

8.6.2 ADJUSTING PROCEDURE

Loosen the lock nut, tighten the adjusting screw all the way, and then loosen the screw by 1/6 turn. Retighten the lock nut.

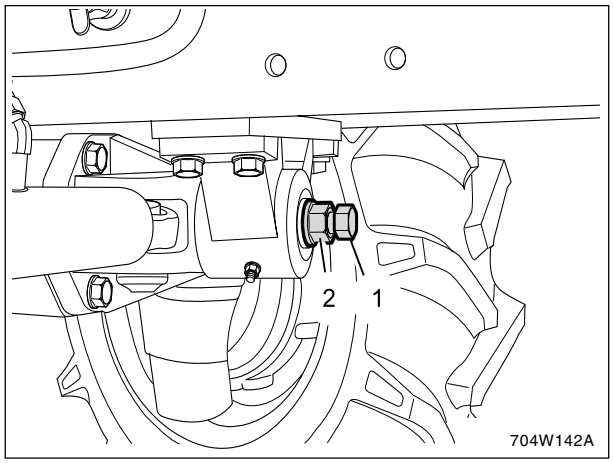

(1) Adjusting Screw

(2) Lock Nut

8.7 EVERY 800 HOURS

8.7.1 ADJUSTING ENGINE VALVE CLEARANCE

Consult your local **DAEDONG** Dealer for this service.

8.8 EVERY 1 YEAR

8.8.1 REPLACING AIR CLEANER ELEMENT

(See “Cleaning Air Cleaner Element” in every 100 hours maintenance.)

8.9 EVERY 2 YEARS

8.9.1 FLUSHING COOLING SYSTEM AND CHANGING COOLANT

IMPORTANT

- ***Do not start engine without coolant.***
- ***Use clean, fresh water and anti-freeze to fill the radiator and recovery tank.***
- ***When the anti-freeze is mixed with water, the anti-freeze mixing ratio must be less than 50 %.***
- ***Securely tighten radiator cap. If the cap is loose or improperly fitted, water may leak out and the engine could overheat.***

CAUTION

To avoid personal injury:

- ***Do not remove the radiator cap when the engine is hot. Loosen cap slightly to the stop. Relieve any excess pressure before removing cap completely.***

1. Stop the engine and let cool down.
2. To drain the coolant, open the radiator drain plug and remove radiator cap. The radiator cap must be removed to completely drain the coolant.
3. After all coolant is drained, close the drain plug.
4. Fill with clean water and cooling system cleaner.
5. Follow directions of the cleaner instruction.
6. After flushing, fill with clean water and anti-freeze until the coolant level is just below the port.
7. Fill with coolant up to the “FULL” mark on the recovery tank.
8. Start and operate the engine for few minutes.
9. Stop the engine and let cool.
10. Check the coolant level of recovery tank and add coolant if necessary.

Coolant capacity	CK25/CK27 CK35	7.4 ℓ (2.0 U.S.gal.)
	CK30	7.8 ℓ (2.1 U.S.gal.)

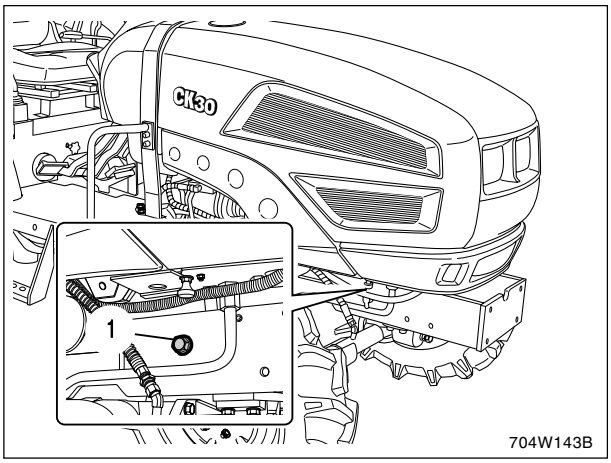

(1) Drain Plug

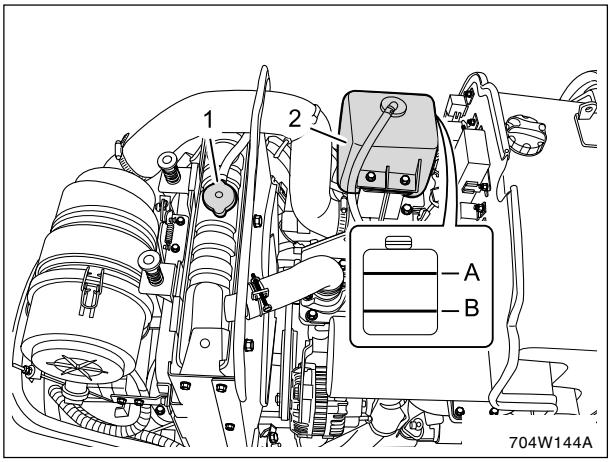

(1) Radiator Cap (A) FULL
(2) Recovery Tank (B) LOW

A. ANTI-FREEZE

If cooling water freezes, it can damage the cylinders and radiator. It is necessary, if the ambient temperature falls below 0°C (32°F), to remove cooling water after operating or to add anti-freeze to it.

1. Use ethylene glycol 50% as anti-freeze.
2. Before adding anti-freeze for the first time, clean the radiator interior by flushing with fresh water a few times.
3. The procedure for mixing of water and anti-freeze differs according to the make of the anti-freeze and the ambient temperature. Basically it should be referred to SAE J1034 standard, more specifically also to SAE J814c.
4. Mix the anti-freeze with water, and then fill the radiator with the mixture.

Vol %	Freezing Point		Boiling Point*	
Anti-freeze	°C	°F	°C	°F
40	-24	-12	106	222
50	-37	-34	108	226

* At 760 mmHg pressure (atmospheric). A higher boiling point is obtained by using a radiator pressure cap which permits the development of pressure within the cooling system.

NOTE:

- *SAE J1034 and SAE J814c are industry standards that necessitate a minimum glycol content in the concentrated anti-freeze.*
- *When the cooling water level drops due to evaporation, add water only. In case of leakage, add anti-freeze and water in the specified mixing ratio.*
- *Anti-freeze absorbs moisture. Keep unused anti-freeze in a tightly sealed container.*
- *Do not use radiator cleaning agents when anti-freeze has been added to the cooling water. (Anti-freeze contains an anti-corrosive agent, that will react with the radiator cleaning agent forming sludge which will affect the engine parts.)*
- *When useing different type of coolant, flush the cooling system throushly beforehand*

8.9.2 REPLACING RADIATOR HOSE (WATER TUBES)

Replace the hoses and clamps.

(See “Checking Radiator Hose and Clamp” in every 200 hours maintenance.)

8.9.3 REPLACING POWER STEERING HOSE

Replace the hoses and clamps.

(See “Checking power steering line” in every 200 hours maintenance.)

8.9.4 REPLACING HST OIL LINE (HST TYPE)

Replace the hoses and clamps.

(See “Checking HST oil line” in every 200 hours maintenance.)

8.9.5 REPLACING FUEL HOSE

Replace the hoses and clamps.

(See “Checking Fuel line” in every 100 hours maintenance.)

8.10 SERVICE AS REQUIRED

8.10.1 BLEEDING FUEL SYSTEM

Air must be removed:

1. When the fuel filter or lines are removed.
2. When tank is completely empty.
3. After the tractor has not been used for a long period of time.

Bleeding procedure is as follows:

1. Fill the fuel tank with fuel, and rotate the fuel cock to the air position.
2. Start the engine and run for about 25 seconds, and then stop the engine.
3. Rotate the fule cock to open position.

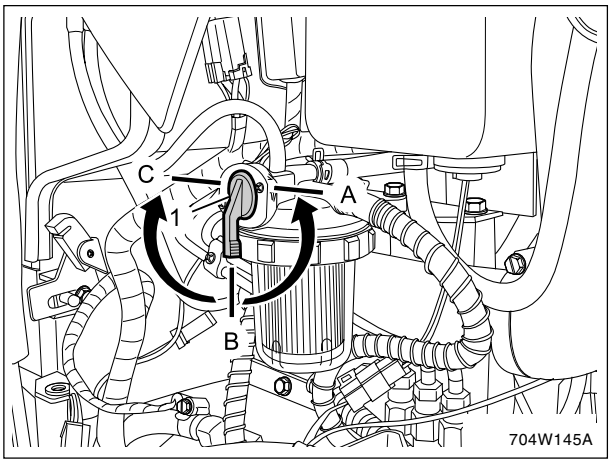

(1) Fuel Cock
(A) Close
(B) Open
(C) Air

8.10.2 DRAINING CLUTCH HOUSING WATER

The tractor is equipped with a plug under the clutch housing.

After operating in rain or snow, or if the tractor has been washed, water may get into the clutch housing.

If water enters into the clutch housing, remove the plug and drain the water, then install the plug again.

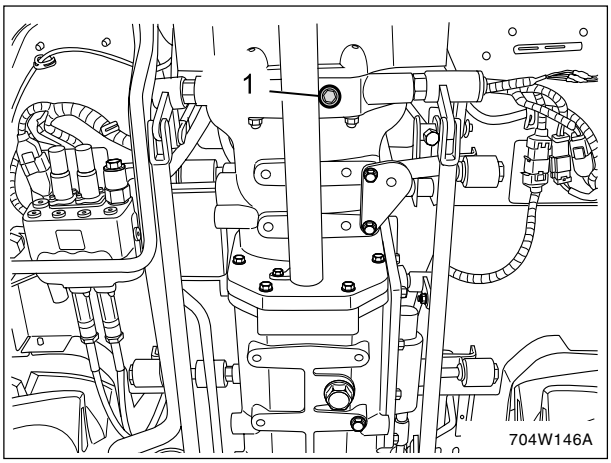

(1) Split Pin Plugs

8.10.3 REPLACING LIGHT BULB

1. Head lights and rear combination lights:
   Take the bulb out of the light body and replace with a new one.
2. Other lights: Detach the lens and replace the bulb.

Light			Capacity
1	Head Lights	USA/AU	35 W / 35 W
		EU	55 W / 60 W
2	Front Position Lamps (Only EU)		5 W
3	Stop Lights /Rear Position		21 W / 5 W
4	Turn Signal Lights		21 W
5	Work Light (Option)		21 W
6	Instrument Panel Light		1.4 W
7	Tail Lights		10 W

8.10.4 REPLACING FUSE

The tractor electrical system is protected from potential damage by fuses.
A blown fuse indicates that there is an overload or short somewhere in the electrical system.
If any of the fuses should blow, replace with a new one of the same capacity.

IMPORTANT

- ***Before replacing a blown fuse, determine why the fuse blew and make any necessary repairs. Failure to follow this procedure may result in serious damage to the tractor electrical system. Refer to the troubleshooting section of this manual or your local DAEDONG Dealer for specific information dealing with electrical problems.***

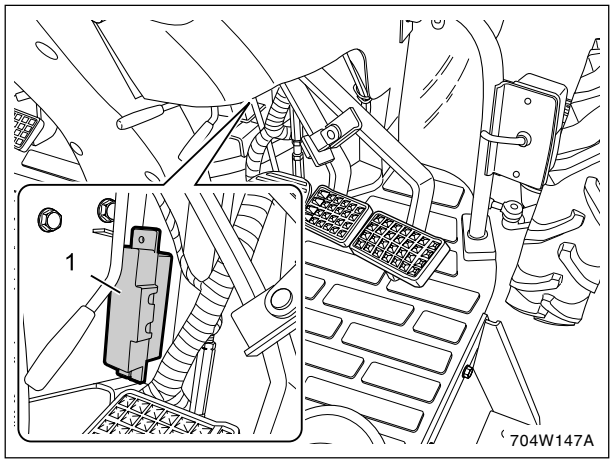

(1) Fuse Box

▶ **PROTECTED CIRCUIT**

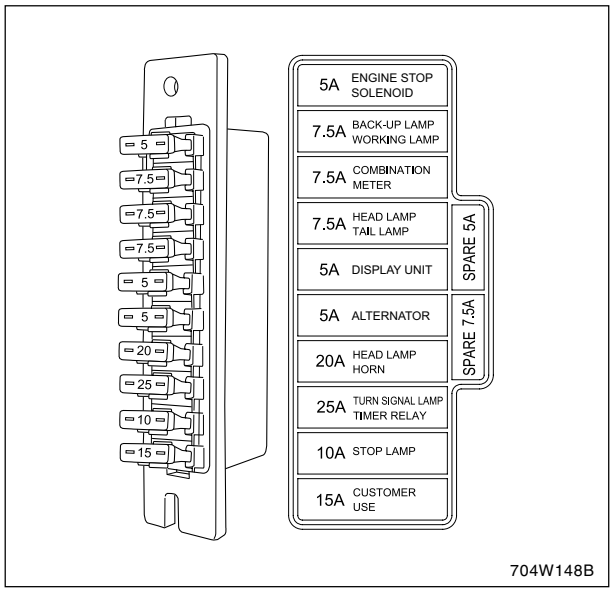

Slow Blow Fuse Capacity (A)	60 A

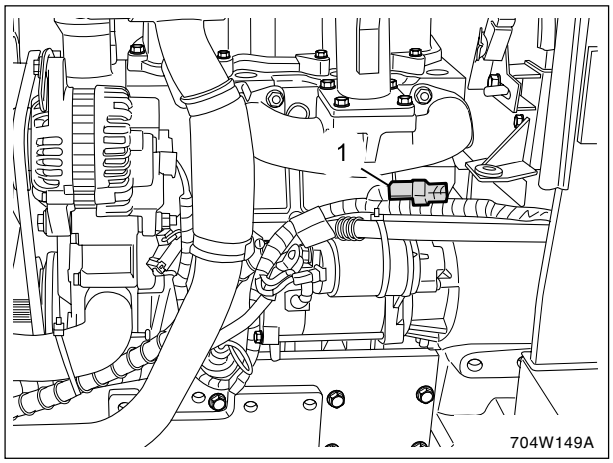

(1) Slow Blow Fuse

9. TIRES

CAUTION

To avoid personal injury:

- ***Do not attempt to mount a tire. This should be done by a qualified person with the proper equipment.***
- ***Always maintain the correct tire pressure.***

  Do not inflate tires above the recommended pressure shown in the operator's manual.

IMPORTANT

- ***Do not use tires larger than specified.***
- ***When you intend to mound different size of tires from equipped ones, consult your dealer about front drive gear ratio for details. Excessive wear of tires may occur due to improper gear ratio.***

9.1 INFLATION PRESSURE

Though the tire pressure is factory-set to the prescribed level, it naturally drops slowly in the course of time. Thus, check it everyday and inflate as necessary.

NOTE:

- *Maintain the maximum pressure in front tires, if using a front loader or when equipped with a full load of front weights.*

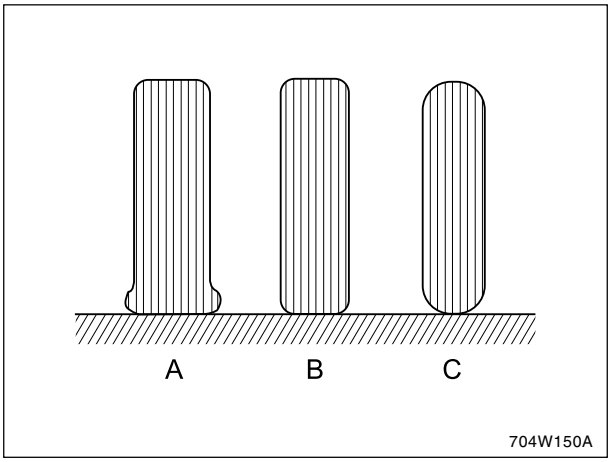

(A) Insufficient (C) Excessive

(B) Standard

		CK25/CK27		CK30/CK35	
		Tire sizes	Inflation Pressure	Tire sizes	Inflation Pressure
Rear	AG	9.5-24,6PR 11.2-24,6PR	207 kPa (2.1kgf/cm^2, 30 psi) 179 kPa (1.8 kgf/cm^2, 26 psi)	11.2-24,6PR	179 kPa (1.8 kgf/cm^2, 26 psi)
	Turf	13.6-16,4PR 41X14.0-20,4PR	97 kPa (1.0 kgf/cm^2, 14 psi) 172 kPa (1.8 kgf/cm^2, 25 psi)	41x14.0-20,4PR	172 kPa (1.8 kgf/cm^2, 25 psi)
	IND	15-19.5,6PR	207 kPa (2.1 kgf/cm^2, 30 psi)	15-19.5,6PR	207 kPa (2.1 kgf/cm^2, 30 psi)
Front	AG	6-14,4PR 7-14,6PR	196 kPa (2.0 kgf/cm^2, 28 psi) 248 kPa (2.5 kgf/cm^2, 36 psi)	7-14,6PR	248 kPa (2.5 kgf/cm^2, 36 psi)
	Turf	25X8.50-14,4PR 27X8.50-15,4PR	152 kPa (1.5 kgf/cm^2, 22 psi) 207 kPa (2.1 kgf/cm^2, 30 psi)	27x8.50-15,4PR	207 kPa (2.1 kgf/cm^2, 30 psi)
	IND	25X8.50-14,6PR	241 kPa (2.5 kgf/cm^2, 35 psi)	25x8.50-14,6PR	241 kPa (2.5 kgf/cm^2, 35 psi)

** IND… for Industrial*

9.2 TREAD

9.2.1 FRONT WHEELS

Front tread can not be adjusted.

IMPORTANT

- ***Do not turn front discs to obtain wider tread.***

Model	Tire	Tread
CK25 CK27	6-14 AG	1,105 mm (43.5 in.)
	25x8.50-14 Turf	1,147 mm (45.2 in.)
	25x8.50-14 IND	1,146 mm (45.1 in.)
CK30 CK35	7-14 AG	1,105 mm (43.5 in.)
	27x8.50-15 Turf	1,126 mm (44.3 in.)
	25x8.50-14 IND	1,146 mm (45.1 in.)

** IND... for Industrial*

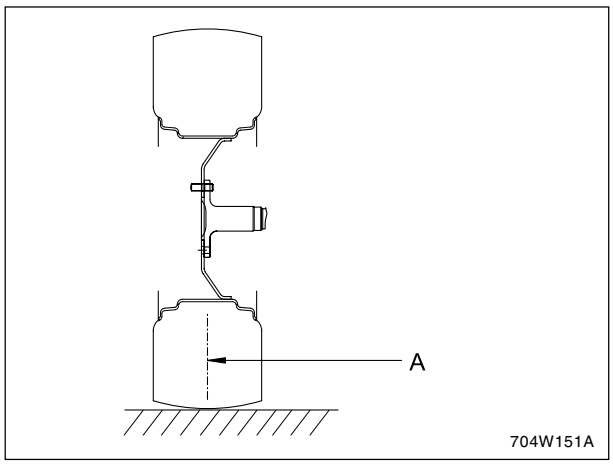

(A) Tread

9.2.2 REAR WHEELS

Rear tread width can be adjusted as shown with the standard equipped tires.

To change the tread width

1. Remove the wheel rim and / or disk mounting bolts.
2. Change the position of the rim and / or disk (right and left) to the desired position, and then tighten the bolts.

Model	A	A	A	A	A	A	A
CK25/27 9.5-24 AG	978 mm (38.5 in.)	978 mm (38.5 in.)	1,062 mm (41.8 in.)	1,094 mm (43.1 in.)	1,178 mm (46.4 in.)	1,178 mm (46.4 in.)	1,294 mm (50.9 in.)
CK30/35 11.2-24 AG	–	–	1,054 mm (41.5 in.)	1,102 mm (43.4 in.)	1,170 mm (46.1 in.)	1,186 mm (46.7 in.)	1,302 mm (51.3 in.)

(A) Tread

Model	A
CK25/27 13.6-16 Turf	1,182 mm (46.5 in.)
CK30/35 41x14.0-20 Turf	1,174 mm (46.2 in.)
CK25/27/30/35 15-19.5 IND	1,202 mm (47.3 in.)

(A) Tread

IMPORTANT

Always attach tires as shown in the drawings.

- ***If not attached as illustrated, transmission parts may be damaged.***
- ***When re-fitting or adjusting a wheel, tighten the bolts to the following torques then recheck after driving the tractor 200 m (2219 yards) and there-after according to service interval.***

  (See "MAINTENANCE" section)

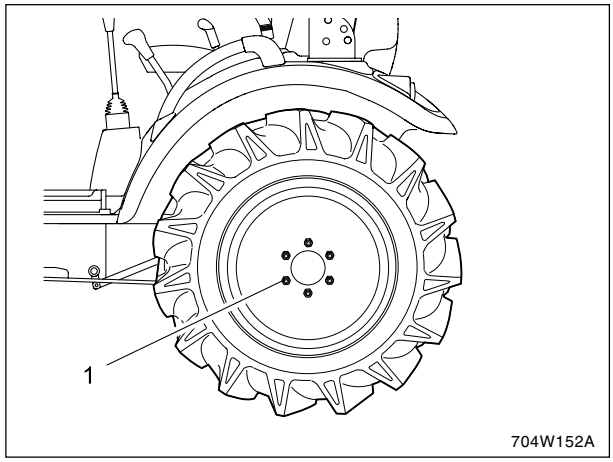

(1) 67 Nm (7 kgf-m, 50 lb-ft)

9.3 BALLAST

9.3.1 FRONT BALLAST

CAUTION

To avoid personal injury:

- ***Additional ballast will be needed for transporting heavy implements. When the implement is raised, drive slowly over rough ground, regardless of how much ballast is used.***
- ***Do not fill the front wheel with liquid to maintain steering control.***

A. FRONT END WEIGHTS

The front end weights can be attached to the bumper. See your implement operator's manual for required number of weights or consult your local **DAEDONG** Dealer to use.

IMPORTANT

- ***Do not overload tires.***
- ***Add no more weight than indicated in chart.***

Maximum weight	17 kg x 5Pieces (187 lbs.)

9.3.2 REAR BALLAST

Add weight to rear wheels if needed to improve traction or for stability. The amount of rear ballast should be matched to job and the ballast should be removed when it is not needed.

The weight should be added to the tractor in the form of liquid ballast, rear wheel weights or a combination of both.

A. REAR WHEEL WEIGHTS (OPTION)

The rear wheel weights can be attached to the rear wheel.

See your implement operator's manual for required number of weights or consult your local **DAEDONG** Dealer to use.

IMPORTANT

- ***Do not overload tires.***
- ***Add no more weight than indicated in chart.***

Maximum weight per wheel	20 kg x 4 Pieces (220.5 lbs.)

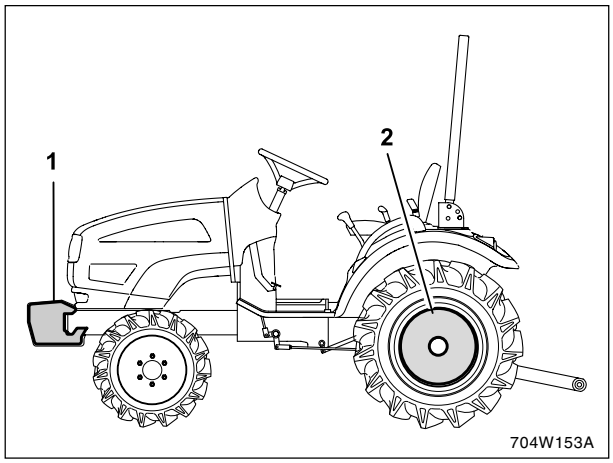

(1) Front End Weights

(2) Rear Wheel Weights

9.4 TRAVELING SPEED

* At rated engine rpm with standard tires.

CK25/27/30/35 km/h (mile/h)

Main	Hi-Low	Main	CK25/CK27	CK30/CK35
Forward	Low	1	1.41 (0.88)	1.50 (0.93)
		2	2.05 (1.27)	2.17 (1.35)
		3	3.11 (1.93)	3.29 (2.05)
		4	4.65 (2.88)	4.92 (3.06)
	High	1	6.59 (4.09)	6.97 (4.33)
		2	9.54 (5.93)	10.09 (6.27)
		3	14.49 (9.00)	15.34 (9.53)
		4	21.65 (13.45)	22.91 (14.24)
Reverse	Low	1	1.25 (0.77)	1.32 (0.82)
		2	1.80 (1.12)	1.91 (1.19)
		3	2.74 (1.70)	2.90 (1.80)
		4	4.09 (2.54)	4.33 (2.69)
	High	1	5.81 (3.60)	6.15 (3.82)
		2	8.40 (5.22)	8.89 (5.53)
		3	12.77 (7.93)	13.5 (8.39)
		4	19.07 (11.85)	20.19 (12.55)

CK25H/27H/30H/35H km/h (mile/h)

Main	Hi-Low	CK25H/27H	CK30H/CK35H
Forward	Low	0~4.99 (3.10)	0~5.28 (3.28)
	Mid	0~9.78 (6.08)	0~10.35 (6.44)
	High	0~19.95 (12.4)	0~21.11 (13.13)
Reverse	Low	0~3.28 (2.04)	0~3.47 (2.16)
	Mid	0~6.11 (3.80)	0~6.46 (4.02)
	High	0~12.47 (7.75)	0~13.19 (8.20)

CREEP SHIFT LEVER (only EU-option) km/h (mile/h)

Main	Hi-Low	Creep	Main	CK25/CK27	CK30/CK35
Forward	Low	Low	1	0.17 (0.11)	0.18 (0.11)
			2	0.25 (0.16)	0.26 (0.16)
			3	0.38 (0.24)	0.39 (0.24)
			4	0.56 (0.35)	0.59 (0.37)
		High	1	1.41 (0.25)	1.47 (0.91)
			2	2.04 (1.27)	2.12 (1.32)
			3	3.10 (1.93)	3.22 (2.00)
			4	4.63 (2.88)	4.82 (3.00)
	High	Low	1	0.80 (0.50)	0.83 (0.52)
			2	1.16 (0.72)	1.21 (0.75)
			3	1.76(1.09)	1.83 (1.14)
			4	2.63 (1.63)	2.74 (1.70)
		High	1	6.56 (4.08)	6.83 (4.24)
			2	9.50 (5.90)	9.88 (6.14)
			3	14.44 (8.97)	15.02 (9.33)
			4	21.56 (13.40)	22.44 (13.94)
Reverse	Low	Low	1	0.15 (0.09)	0.16 (0.10)
			2	0.22 (0.14)	0.23 (0.14)
			3	0.33 (0.21)	0.35 (0.22)
			4	0.50 (0.31)	0.52 (0.32)
		High	1	1.24 (0.77)	1.29 (0.81)
			2	1.80 (1.12)	1.87 (1.16)
			3	2.73 (1.70)	2.84 (1.76)
			4	4.08 (2.54)	4.24 (2.63)
	High	Low	1	0.71 (0.44)	0.73 (0.45)
			2	1.02 (0.63)	1.06 (0.66)
			3	1.55 (0.96)	1.61 (1.00)
			4	2.32 (1.44)	2.41 (1.50)
		High	1	5.78 (3.59)	6.02 (3.74)
			2	8.37 (5.20)	8.71 (5.41)
			3	12.72 (7.90)	13.23(8.22)
			4	19.00 (11.81)	19.77 (12.28)

CK25/27/30/35

ENGINE

TABLE OF CONTENTS

1. SPECIFICATIONS 2-3

1.1 TD1300 specifications (CK25) 2-3

1.1.1 Engine body 2-3

1.1.2 Lubricating system 2-6

1.1.3 Cooling system 2-7

1.1.4 Fuel system 2-7

1.1.5 Tightening torques 2-8

1.2 3A139(CK27)/3A150(CK30)/3A165 (CK35) 2-9

1.2.1 Engine body 2-9

1.2.2 Lubricating system 2-12

1.2.3 Cooling system 2-13

1.2.4 Fuel system 2-13

1.2.5 Tightening torques 2-14

2. OPERATING PRINCIPLE 2-15

2.1 Lubricating system 2-15

2.2 Cooling system 2-16

2.3 Fuel system 2-17

2.3.1 Fuel flow route 2-17

2.3.2 Fuel filter 2-18

2.3.3 Bleeding the fuel system 2-18

2.3.4 Fuel feed pump 2-19

2.3.5 Fuel injection pump 2-19

2.4 Governor system 2-23

2.4.1 Basic principle of governor system 2-23

2.4.2 Operation of governor 2-24

2.5 PCV valve 2-25

2.5.1 PCV (positive crankcases ventilation) 2-25

3. TROUBLESHOOTING 2-26

4. MEASUREMENT AND ADJUSTMENT. 2-29

4.1 Fan belt 2-29

4.2 Engine body 2-29

4.2.1 Checking and adjusting 2-29

4.3 Valve clearance 2-30

4.4 Injection timing measurement and adjustment 2-31

4.5 Engine oil pressure 2-33

5. EXPLODED VIEW 2-35

6. SERVICING 2-37

6.1 Removal and reassembly 2-37

6.1.1 Draining the coolant 2-37

6.1.2 Draining the engine oil 2-38

6.1.3 Bonnet 2-39

6.1.4 Hydraulic pipe and electric wiring 2-39

6.1.5 Propeller shaft 2-40

6.1.6 Separating engine & clutch housing 2-40

6.1.7 Removing clutch 2-41

6.1.8 Separating the fuel tank 2-41

TABLE OF CONTENTS

6.1.9 Disassembling front axle frame 2-42

6.1.10 Disassembling other engine parts 2-42

6.1.11 Cylinder head cover, glow plugs and fuel overflow pipes 2-43

6.1.12 Heat seal removal procedure .. 2-43

6.1.13 Rocker arm assembly 2-44

6.1.14 Cylinder head..... 2-45

6.1.15 Valve 2-45

6.1.16 injection pump 2-46

6.1.17 Crankcase 2-51

6.1.18 Idle gear and crank gear 2-52

6.1.19 Valve camshaft 2-53

6.1.20 Fuel camshaft 2-53

6.1.21 Connecting rod and piston .. 2-54

6.1.22 Crankshaft 2-56

6.2 Inspection for overhaul 2-58

6.2.1 Cylinder head and valve 2-58

6.2.2 Valve spring 2-61

6.2.3 Checking oil clearance between rocker arm shaft and bushing .. 2-62

6.2.4 Timing gears and camshafts 2-63

6.2.5 Connecting rod and piston .. 2-66

6.2.6 Crankshaft 2-69

6.2.7 Cylinder bore 2-72

6.2.8 Lubricating system 2-73

6.2.9 Cooling system 2-75

6.2.10 Fuel system 2-78

1. SPECIFICATIONS

1.1 TD1300 SPECIFICATIONS (CK25)

1.1.1 ENGINE BODY

A. CYLINDER HEAD

Item	Factory Specification	Allowable Limit
Cylinder head surface flatness	-	0.05 mm / 100 mm 0.002 in. / 3.94 in.
Top clearance	0.7 ~ 0.9 mm 0.0276 ~ 0.0354 in.	-
Thickness of gasketfree	When tightened 1.18 ~ 1.28 mm 0.0465 ~ 0.0504 in.	-
Compression pressure (when cranking with starting motor)	3.24 ~ 3.73 MPa 33 ~ 38 kgf/cm^2 469 ~ 540 psi	2.55 MPa 26 kgf/cm^2 370 psi

* Variance of compression pressure among cylinders should be 10% or less.

B. VALVES

Item		Factory Specification	Allowable Limit
Valve clearance (cold)	IN. EX.	0.1 mm 0.0039 in. 0.1 mm 0.0039 in.	-
Valve seat angle	IN. EX.	0.785 rad. 45° 0.785 rad. 45°	-
Valve face angle	IN. EX.	1.047 rad. 60° 1.047 rad. 60°	-
Valve recessing		1.1 ~ 1.3 mm 0.0433 ~ 0.0512 in.	1.6 mm 0.0630 in.
Clearance between valve stem and valve guide		0.025 ~ 0.055 mm 0.0010 ~ 0.0022 in.	0.10 mm 0.004 in.
Valve stem O.D		7.960 ~ 7.975 mm 0.31339 ~ 0.31398 in.	-
Valve stem I.D		8.0 ~ 8.015 mm 0.31496 ~ 0.31555 in.	-

C. VALVE TIMING

Item		Factory Specification	Allowable Limit
Inlet valve	Open Close	0.349rad 20° before T.D.C 0.785rad 45° after B.D.C	-
Exhaust valve	Open Close	0.873rad 50° before B.D.C 0.262rad 15° after T.D.C	-

D. CYLINDER BORE

Item	Factory Specification	Allowable Limit
Cylinder bore inner diameter	82.000 ~ 82.022 mm 3.2283 ~ 3.2292 in.	0.15 mm 0.0059 in.

E. VALVE SPRING

Item	Factory Specification	Allowable Limit
Free length	41.7 ~ 42.2 mm 1.6417 ~ 1.6614 in.	41.2 mm 1.6220 in.
Assembling load / Assembling length	12.0 kgf / 35.15 mm 26.5 lbs / 1.3839 in.	10.2 kgf / 35.15 mm 22.5 lbs / 1.3839 in.
Squareness	-	1.0 mm 0.039 in.

F. ROCKER ARM

Item	Factory Specification	Allowable Limit
Rocker arm shaft O.D	13.973 ~ 13.984 mm 0.55012 ~ 0.55055 in.	-
Rocker arm bushing I.D	13.998 ~ 14.023 mm 0.55110 ~ 0.55209 in.	-

G. TAPPET

Item	Factory Specification	Allowable Limit
Clearance between tappet and guide	0.020 ~ 0.062 mm 0.00079 ~ 0.00244 in.	0.07 mm 0.0028 in.
Tappet O.D	23.959 ~ 23.980 mm 0.94327 ~ 0.94410 in.	-
Tappet guide I.D	24.000 ~ 24.021 mm 0.94488 ~ 0.94571 in.	-

H. CAMSHAFT

Item		Factory Specification	Allowable Limit
Camshaft alignment		0.01 mm 0.0004 in.	0.05 mm 0.0020 in.
Cam height	IN.	33.5 ~ 33.6 mm 1.319 ~ 1.323 in.	33.45 mm 1.3169 in.
	EX.	33.5 ~ 33.6 mm 1.319 ~ 1.323 in.	33.45 mm 1.3169 in.
Clearance between camshaft		0.050 ~ 0.091 mm 0.00197 ~ 0.00358 in.	0.15 mm 0.0059 in.
Camshaft journal O.D		39.934 ~ 39.950 mm 1.57221 ~ 1.57284 in.	39.88 mm 1.5701 in.
Camshaft counter bore I.D		40.000 ~ 40.025 mm 1.57480 ~ 1.57579 in.	-

I. TIMING GEAR

Item		Factory Specification	Allowable Limit
Timing gear backlash		0.04 ~ 0.11 mm 0.0016 ~ 0.0043 in.	0.15 mm 0.0059 in.
Idle gear side clearance		0.20 ~ 0.51 mm 0.0079 ~ 0.0201 in.	0.9 mm 0.035 in.
Clearance between	Idle gear shaft and idle gear bushing	0.020 ~ 0.054 mm 0.00079 ~ 0.00213 in.	0.1 mm 0.0039 in.
	Idle gear shaft O.D	27.967 ~ 27.980 mm 1.10106 ~ 1.10157 in.	-
	Idle gear bushing I.D	28.000 ~ 28.021 mm 1.10236 ~ 1.10319 in.	-

J. PISTON RING

Item		Factory Specification	Allowable Limit
Piston pin-bore I.D		23.00 ~ 23.013 mm 0.90551 ~ 0.90602 in.	23.053 mm 0.9076 in.
Clearance between	Oil ring and ring groove	0.020 ~ 0.060 mm 0.00079 ~ 0.00236 in.	0.15 mm 0.0059 in.
	Oil ring groove width	5.01 ~ 5.03 mm 0.19724 ~ 0.19803 in.	-
	Oil ring width	4.97 ~ 4.99 mm 0.19567 ~ 0.19646 in.	-
Clearance between	2nd ring and ring groove	0.065 ~ 0.100 mm 0.00256 ~ 0.00394 in.	0.15 mm 0.0059 in.
	2nd ring groove width	2.055 ~ 2.070 mm 0.08091 ~ 0.08150 in.	-
	2nd ring width	1.97 ~ 1.99 mm 0.07756 ~ 0.07834 in.	-
Top ring, oil ring end gap		0.25 ~ 0.40 mm 0.0098 ~ 0.01570 in.	1.25 mm 0.0492 in.
2nd ring end gap		0.25 ~ 0.40 mm 0.0098 ~ 0.01570 in.	1.25 mm 0.0492 in.

K. CONNECTING ROD

Item		Factory Specification	Allowable Limit
Connecting rod alignment		-	0.05 mm 0.0020 in.
Clearance between bushing	Piston and small end	0.014 ~ 0.038 mm 0.00055 ~ 0.00150 in.	0.15 mm 0.0059 in.
	Piston pin O.D	23.002 ~ 23.011 mm 0.90560 ~ 0.90594 in.	-
	Small end bushing I.D	23.025 ~ 23.040 mm 0.90650 ~ 0.90708 in.	-

L. CRANKSHAFT

Item		Factory Specification	Allowable Limit
Crankshaft alignment		-	0.08 mm 0.0031 in.
Clearance between	Crankshaft and crankshaft bearing 1	0.040 ~ 0.118 mm 0.00157 ~ 0.00465 in.	0.20 mm 0.0079 in.
	Crankshaft O.D	51.921 ~ 51.940 mm 2.04414 ~ 2.04488 in.	-
	Crankshaft bearing 1 I.D	51.980 ~ 52.039 mm 2.04646 ~ 2.04878 in.	-
Clearance between	Crankshaft and crankshaft bearing 2	0.040 ~ 0.104 mm 0.00157 ~ 0.00409 in.	0.20 mm 0.0079 in.
	Crankshaft O.D	51.921 ~ 51.940 mm 2.04414 ~ 2.04488 in.	-
	Crankshaft bearing 2 I.D	51.980 ~ 52.025 mm 2.04646 ~ 2.04823 in.	-
Clearance between	Crank pin and crank pin bearing	0.035 ~ 0.093 mm 0.0014 ~ 0.0037 in.	0.20 mm 0.0079 in.
	Crank pin O.D	43.959 ~ 43.975 mm 1.73067 ~ 1.73130 in.	-
	Crank pin bearing I.D	44.010 ~ 44.052 mm 1.73268 ~ 1.73433 in.	-
Crankshaft side clearance		0.15 ~ 0.31 mm 0.0059 ~ 0.0122 in.	0.5 mm 0.020 in.

1.1.2 LUBRICATING SYSTEM

A. OIL PUMP

Item		Factory Specification	Allowable Limit
Engine oil pressure (oil temp. 85 ~ 95 °C, 185 ~ 203 °F)	At idle speed	more than 68.6 kPa 0.7 kgf/cm^2 9.95 psi	-
	At rated speed	294.2 ~ 441 kPa 3.0 ~ 4.5 kgf/cm^2 42.7 ~ 64.0 psi	294.2 kPa 3.0 kgf/cm^2 42.7 psi
Clearance between inner rotor and outer rotor		0.10 ~ 0.16 mm 0.0039 ~ 0.0063 in.	0.2 mm 0.0079 in.
Radial clearance between outer rotor and pump		0.11 ~ 0.19 mm 0.0043 ~ 0.0078 in.	0.25 mm 0.0098 in.
End clearance between inner rotor and cover		0.105 ~ 0.150 mm 0.00413 ~ 0.00591 in.	0.2 mm 0.00787 in.

1.1.3 COOLING SYSTEM

A. THERMOSTAT

Valve opening temperature at beginning	69.5 ~ 72.5 °C (157.1 ~ 162.5 °F)
Opened completely (height 8 mm 0.315 in.)	85 °C (185 °F)

B. RADIATOR

Radiator tightness	No leak at 137 kPa, 1.4 kgf/cm^2, 20 psi
Radiator cap tightness	10 seconds or more for pressure falling from 88 ~ 59 kPa from 0.9 ~ 0.6 kgf/cm^2 from 13 ~ 9 psi
Fan belt tension [deflection at 78 N (8 kgf, 18 lbs) of force]	7 ~ 9 mm 0.28 ~ 0.35 in.

1.1.4 FUEL SYSTEM

A. INJECT PUMP

Injection timing (BTDC)	20°

B. INJECTION NOZZLE

Fuel injection pressure	14.709 MPa 150 kgf/cm^2 2,134 psi
Fuel tightness of nozzle valve seat	No fuel leak for 5 sec. at pressure 12.75 MPa 130 kgf/cm^2 1,849 psi

NOTE:

- *Injection Sequence*
  Three Cylinders: 1 → 2 → 3
  (The cylinder number is given in order from the gear case end.)

1.1.5 TIGHTENING TORQUES

Item	Size x Pitch	Nm	kgf-m	lb-ft
Cylinder head screws	M11 x 1.25	103.0 ~ 107.9	10.5 ~ 11.0	75.9 ~ 79.6
Head cover bolts	M6 x 1.0	8.8 ~ 11.8	0.9 ~ 1.2	6.5 ~ 8.7
* Bearing case screw 1	M9 x 1.25	46.1 ~ 51.0	4.7 ~ 5.2	34.0 ~ 37.6
* Bearing case screw 2	M10 x 1.25	68.6 ~ 73.6	7.0 ~ 7.5	50.6 ~ 54.2
* Flywheel screw	M12 x 1.25	98.1 ~ 107.9	10.0 ~ 11.0	72.3 ~ 79.6
* Connecting rod screws	M8 x 1.0	46.1 ~ 51.0	4.5 ~ 5.0	34.0 ~ 37.6
Rocker arm support bolts	M10 x 1.25	68.0 ~ 70.6	6.2 ~ 7.2	44.8 ~ 52.1
Drain plug	M12 x 1.25	32.4 ~ 37.3	3.3 ~ 3.8	23.9 ~ 37.3
Glow plugs	M10 x 1.25	19.6 ~ 24.5	2.0 ~ 2.5	14.5 ~ 18.1
Oil switch	PT1/8	14.7 ~ 19.6	1.5 ~ 2.0	10.8 ~ 14.5
Nozzle locating screws	M20 x 1.5	49.1 ~ 68.7	5.0 ~ 7.0	36.2 ~ 50.6
Injection pipe nuts	M12 x 1.5	24.5 ~ 34.3	2.5 ~ 3.5	18.1 ~ 25.3

NOTE:

- *For *marked screw, bolts and nuts on the table, apply engine oil to their threads and seats before tightening.*
- *The letter “M” in Size x Pitch means that the screw, bolt or nut dimension stands for metric. The size is the nominal outside diameter in mm of the threads. The pitch is the nominal distance in mm between two threads.*

1.2 3A139(CK27) / 3A150 (CK30) / 3A165 (CK35)

1.2.1 ENGINE BODY

A. CYLINDER HEAD

Item	Factory Specification	Allowable Limit
Cylinder head surface flatness	-	0.05 mm / 100 mm 0.002 in. / 3.94 in.
Top clearance	0.750 ~ 0.9 mm 0.0294 ~ 0.0354 in.	-
Thickness of gasketfree (MSL Gasket)	When tightened 1.21 mm 0.0476 in.	-
Compression pressure (when cranking with starting motor)	3.24 ~ 3.73 MPa 33 ~ 38 kgf/cm^2 469 ~ 540 psi	2.55 MPa 26 kgf/cm^2 370 psi

* Variance of compression pressure among cylinders should be 10% or less.

B. VALVES

Item		Factory Specification	Allowable Limit
Valve clearance (cold)	IN. EX.	0.25 mm 0.0098 in. 0.30 mm 0.0118 in.	±0.05mm ±0.0020 in.
Valve seat angle	IN. EX.	1.047 rad. 60° 0.785 rad. 45°	-
Valve face angle	IN. EX.	1.047 rad. 60° 0.785 rad. 45°	-
Valve recessing		0.2 ~ 0.5 mm 0.0079 ~ 0.0197 in.	0.8 mm 0.0315 in.
Clearance between valve stem and valve guide		0.040 ~ 0.070 mm 0.0016 ~ 0.0028 in.	0.10 mm 0.0039 in.
Valve stem O.D		7.960 ~ 7.975 mm 0.31339 ~ 0.31398 in.	-
Valve stem I.D		8.015 ~ 8.030 mm 0.3156 ~ 0.3161 in.	-

C. VALVE TIMING

Item		Factory Specification	Allowable Limit
Inlet valve	Open Close	0.14rad 8° before T.D.C 0.611rad 35° after B.D.C	-
Exhaust valve	Open Close	0.785rad 45° before B.D.C 0.140rad 8° after T.D.C	-

D. CYLINDER BORE

Item		Factory Specification	Allowable Limit
Cylinder bore inner diameter	3A139	80.000 ~ 80.022 mm 3.1496 ~ 3.1505 in.	0.15 mm 0.0059 in.
	3A165	87.000 ~ 87.022 mm 3.4252 ~ 3.4261 in.	
	3A150	83.000 ~ 83.022 mm 3.2677 ~ 3.2690 in.	

E. VALVE SPRING

Item	Factory Specification	Allowable Limit
Free length	41.7 ~ 42.2 mm 1.6417 ~ 1.6614 in.	41.2 mm 1.6220 in.
Assembling load / Assembling length	12.0 kgf / 35.15 mm 26.5 lbs / 1.3839 in.	10.2 kgf / 35.15 mm 22.5 lbs / 1.3839 in.
Squareness	-	1.0 mm 0.039 in.

F. ROCKER ARM

Item	Factory Specification	Allowable Limit
Rocker arm shaft O.D	18.955 ~ 18.980 mm 0.7463 ~ 0.7472 in.	-
Rocker arm bushing I.D	19.000 ~ 19.025 mm 0.7480 ~ 0.7490 in.	-

G. TAPPET

Item	Factory Specification	Allowable Limit
Clearance between tappet and guide	0.020 ~ 0.062 mm 0.00079 ~ 0.00244 in.	0.07 mm 0.0028 in.
Tappet O.D	23.959 ~ 23.980 mm 0.94327 ~ 0.94410 in.	-
Tappet guide I.D	24.000 ~ 24.021 mm 0.94488 ~ 0.94571 in.	-

H. CAMSHAFT

Item		Factory Specification	Allowable Limit
Camshaft alignment		0.01 mm 0.0004 in.	0.05 mm 0.0020 in.
Cam height	IN.	33.59 mm 1.3224 in.	33.54 mm 1.3205 in.
	EX.	33.69 mm 1.326 in.	33.64 mm 1.3244 in.
Clearance between camshaft		0.050 ~ 0.091 mm 0.00197 ~ 0.00358 in.	0.15 mm 0.0059 in.
Camshaft journal O.D		39.934 ~ 39.950 mm 1.57220 ~ 1.57283 in.	39.88 mm 1.5701 in.
Camshaft counter bore I.D		40.000 ~ 40.025 mm 1.57480 ~ 1.57579 in.	-

I. TIMING GEAR

Item		Factory Specification	Allowable Limit
Timing gear backlash		0.04 ~ 0.11 mm 0.0016 ~ 0.0043 in.	0.15 mm 0.0059 in.
Idle gear side clearance		0.20 ~ 0.51 mm 0.0079 ~ 0.0201 in.	0.9 mm 0.035 in.
Clearance between	Idle gear shaft and idle gear bushing	0.025 ~ 0.066 mm 0.00098 ~ 0.00250 in.	0.1 mm 0.0039 in.
	Idle gear shaft O.D	37.9590 ~ 37.9750 mm 1.49445 ~ 1.49508 in.	-
	Idle gear bushing I.D	38.000 ~ 38.025 mm 1.49608 ~ 1.49705 in.	-

J. PISTON RING

Item		Factory Specification	Allowable Limit
Piston pin-bore I.D		25.00 ~ 25.006 mm 0.98425 ~ 0.98448 in.	25.03 mm 0.9854 in.
Clearance between	Oil ring and ring groove	0.020 ~ 0.060 mm 0.00079 ~ 0.00236 in.	0.15 mm 0.0059 in.
	Oil ring groove width	3.01 ~ 3.03 mm 0.1185 ~ 0.1193 in.	-
	Oil ring width	2.97 ~ 2.99 mm 0.1169 ~ 0.1177 in.	-
Clearance between	2nd ring and ring groove	0.04 ~ 0.08 mm 0.0016 ~ 0.0031 in.	0.15 mm 0.0059 in.
	2nd ring groove width	2.03 ~ 2.05 mm 0.0799 ~ 0.0807 in.	-
	2nd ring width	1.97 ~ 1.99 mm 0.07756 ~ 0.07834 in.	-
Top ring, oil ring end gap	3A150 Model Oil ring end gap	0.20 ~ 0.40 mm 0.0079 ~ 0.0157 in.	1.25 mm 0.0492 in.
	3A150 Model Top ring and gap	0.25 ~ 0.40 mm 0.0098 ~ 0.0157 in.	1.25 mm 0.0492 in.
	3A165/3A139 Model		
2nd ring end gap		0.55 ~ 0.70 mm 0.0217 ~ 0.0276 in.	

K. CONNECTING ROD

Item		Factory Specification	Allowable Limit
Connecting rod alignment		-	0.05 mm 0.0020 in.
Clearance between	Piston and small end bushing	0.014 ~ 0.038 mm 0.00055 ~ 0.00150 in.	0.15 mm 0.0059 in.
	Piston pin O.D	25.002 ~ 25.011 mm 0.98433 ~ 0.98469 in.	-
	Small end bushing I.D	25.025 ~ 25.040 mm 0.98524 ~ 0.98583 in.	-

L. CRANKSHAFT

Item		Factory Specification	Allowable Limit
Crankshaft alignment		-	0.08 mm 0.0031 in.
Clearance between	Crankshaft and crank-shaft bearing 1	0.040 ~ 0.118 mm 0.00157 ~ 0.00465 in.	0.20 mm 0.0079 in.
	Crankshaft O.D	51.921 ~ 51.940 mm 2.04414 ~ 2.04488 in.	-
	Crankshaft bearing 1 I.D	51.980 ~ 52.039 mm 2.04646 ~ 2.04878 in.	-
Clearance between	Crankshaft and crank-shaft bearing 2	0.040 ~ 0.104 mm 0.00157 ~ 0.00409 in.	0.20 mm 0.0079 in.
	Crankshaft O.D	51.921 ~ 51.940 mm 2.04414 ~ 2.04488 in.	-
	Crankshaft bearing 2 I.D	51.980 ~ 52.025 mm 2.04646 ~ 2.04823 in.	-
Clearance between	Crank pin and crank pin bearing 2	0.025 ~ 0.087 mm 0.0010 ~ 0.0034 in.	0.20 mm 0.0079 in.
	Crank pin O.D	46.959 ~ 46.975 mm 1.84877 ~ 1.84940 in.	-
	Crank pin bearing I.D	47.000 ~ 47.046 mm 1.85039 ~ 1.85220 in.	-
Crankshaft side clearance		0.15 ~ 0.31 mm 0.0059 ~ 0.0122 in.	0.5 mm 0.020 in.

1.2.2 LUBRICATING SYSTEM

A. OIL PUMP

Item		Factory Specification	Allowable Limit
Engine oil pressure (oil temp. 85 ~ 95 °C, 185 ~ 203 °F)	At idle speed	more than 68.6 kPa 0.7 kgf/cm^2 9.95 psi	-
	At rated speed	245.1 ~ 441.2 kPa 2.5 ~ 4.5 kgf/cm^2 35.5 ~ 64.0 psi	245.0 kPa 2.5 kgf/cm^2 35.6 psi
Clearance between inner rotor and outer rotor		0.10 ~ 0.16 mm 0.0039 ~ 0.0063 in.	0.2 mm 0.0079 in.
Radial clearance between outer rotor and pump		0.11 ~ 0.19 mm 0.0043 ~ 0.0078 in.	0.25 mm 0.0098 in.
End clearance between inner rotor and cover		0.105 ~ 0.150 mm 0.00413 ~ 0.00591 in.	0.2 mm 0.00787 in.

1.2.3 COOLING SYSTEM

A. THERMOSTAT

Valve opening temperature at beginning	69.5 ~ 72.5 °C (157.1 ~ 162.5 °F)
Opened completely (height 8 mm 0.315 in.)	85 °C (185 °F)

B. RADIATOR

Radiator tightness	No leak at 137 kPa, 1.4 kgf/cm^2, 20 psi
Radiator cap tightness	10 seconds or more for pressure falling from 88 ⟶ 59 kPa from 0.9 ⟶ 0.6 kgf/cm^2 from 13 ⟶ 9 psi
Fan belt tension [deflection at 78 N (8 kgf, 18 lbs) of force]	7 ~ 9 mm 0.28 ~ 0.35 in.

1.2.4 FUEL SYSTEM

A. INJECT PUMP

Injection timing (BTDC)	18°

B. INJECTION NOZZLE

Fuel injection pressure	14.709 MPa 150~160 kgf/cm^2 2,134~2,276 psi
Fuel tightness of nozzle valve seat	No fuel leak for 5 sec. at pressure 12.75 MPa 130 kgf/cm^2 1,849 psi

NOTE:

- *Injection Sequence*
  Three Cylinders: 1 → 2 → 3
  (The cylinder number is given in order from the gear case end.)

1.2.5 TIGHTENING TORQUES

Item	Size x Pitch	Nm	kgf-m	lb-ft
Cylinder head screws	M11 x 1.25	103.0 ~ 107.9	10.5 ~ 11.0	75.9 ~ 79.6
Head cover bolts	M6 x 1.0	8.8 ~ 11.8	0.9 ~ 1.2	6.5 ~ 8.7
* Bearing case screw 1	M9 x 1.25	46.1 ~ 51.0	4.7 ~ 5.2	34.0 ~ 37.6
* Bearing case screw 2	M10 x 1.25	68.6 ~ 73.6	7.0 ~ 7.5	50.6 ~ 54.2
* Flywheel screw	M12 x 1.25	98.1 ~ 107.9	10.0 ~ 11.0	72.3 ~ 79.6
* Connecting rod screws	M8 x 1.0	46.1 ~ 51.0	4.5 ~ 5.0	34.0 ~ 37.6
Rocker arm support bolts	M10 x 1.25	60.8 ~ 70.6	6.2 ~ 7.2	44.8 ~ 52.1
Drain plug	M12 x 1.25	32.4 ~ 37.3	3.3 ~ 3.8	23.9 ~ 37.3
Glow plugs	M10 x 1.25	19.6 ~ 24.5	2.0 ~ 2.5	14.5 ~ 18.1
Oil switch	PT1/8	14.7 ~ 19.6	1.5 ~ 2.0	10.8 ~ 14.5
Nozzle locating screws	M20 x 1.5	49.1 ~ 68.7	5.0 ~ 7.0	36.2 ~ 50.6
Injection pipe nuts	M12 x 1.5	24.5 ~ 34.3	2.5 ~ 3.5	18.1 ~ 25.3

NOTE:

- *For *marked screw, bolts and nuts on the table, apply engine oil to their threads and seats before tightening.*
- *The letter “M” in Size x Pitch means that the screw, bolt or nut dimension stands for metric. The size is the nominal outside diameter in mm of the threads. The pitch is the nominal distance in mm between two threads.*

2. OPERATING PRINCIPLE

2.1 LUBRICATING SYSTEM

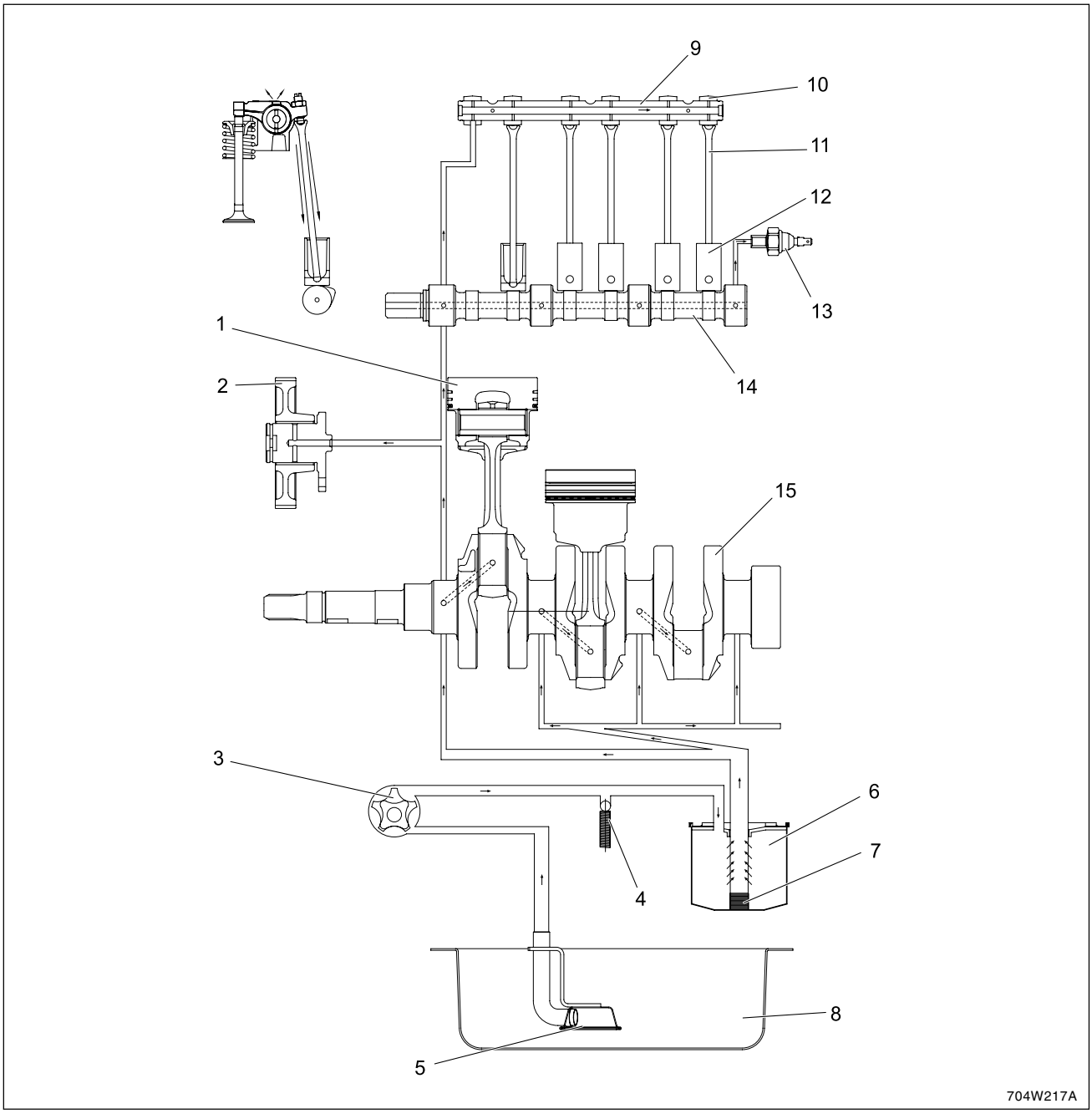

(1) Piston	(5) Strainer	(9) Rocker Arm Shaft	(13) Oil Pressure Switch
(2) Idle Gear	(6) Oil Filter Element	(10) Rocker Arm	(14) Camshaft
(3) Oil Pump	(7) Bypass Valve	(11) Push Rod	(15) Crankshaft
(4) Relief Valve	(8) Oil Pan	(12) Tappet	

The lubricating oil is forced to each journal through the oil passages of the cylinder block, cylinder head and shafts. The oil, splashed by the crankshaft or thrown off from the bearings, lubricates other engine parts such as the push rods (11), tappets (12), camshaft (14), and crankshaft (15).

2.2 COOLING SYSTEM

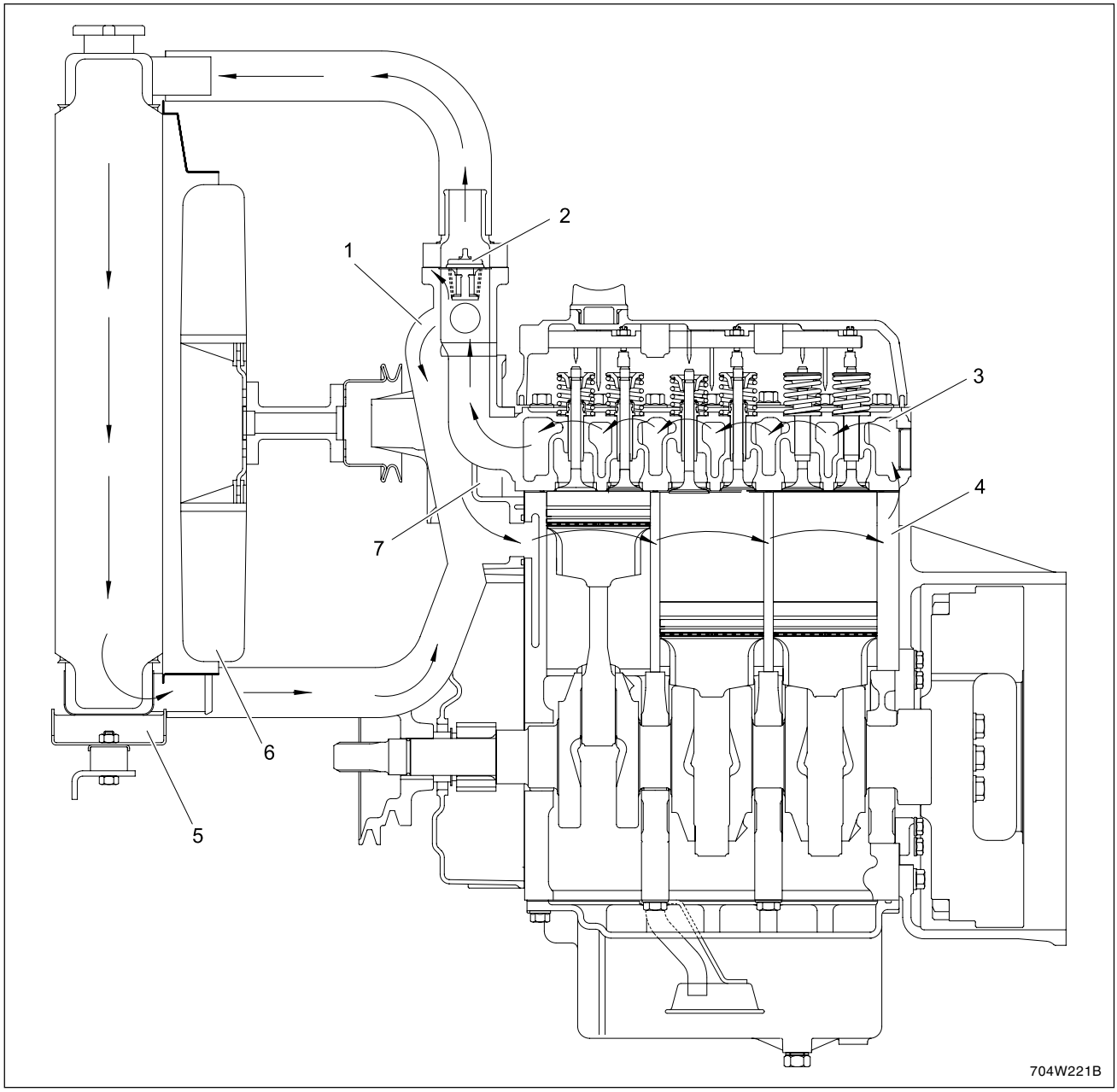

(1) Water Return Pipe
(2) Thermostat
(3) Cylinder Head Water Jacket
(4) Cylinder Block Water Jacket
(5) Radiator
(6) Cooling Fan
(7) Water Pump

The cooling system consists of a radiator (5), a centrifugal water pump (7), a cooling fan (6) and a thermostat (2). The water is cooled as it flows through the radiator core, and the fan behind the radiator pulls the cooling air through the radiator core. The water pump receives water from the radiator or from the cylinder head and forces it into cylinder block. The thermostat open or closes according to the water temperature. When the water temperature is high, the thermostat opens to allow the water to flow from the cylinder block to the radiator. When the water temperature is low, the thermostat closes and the flow stays within the block. The opening temperature of the thermostat is approx. 71°C (160°F).

2.3 FUEL SYSTEM

2.3.1 FUEL FLOW ROUTE

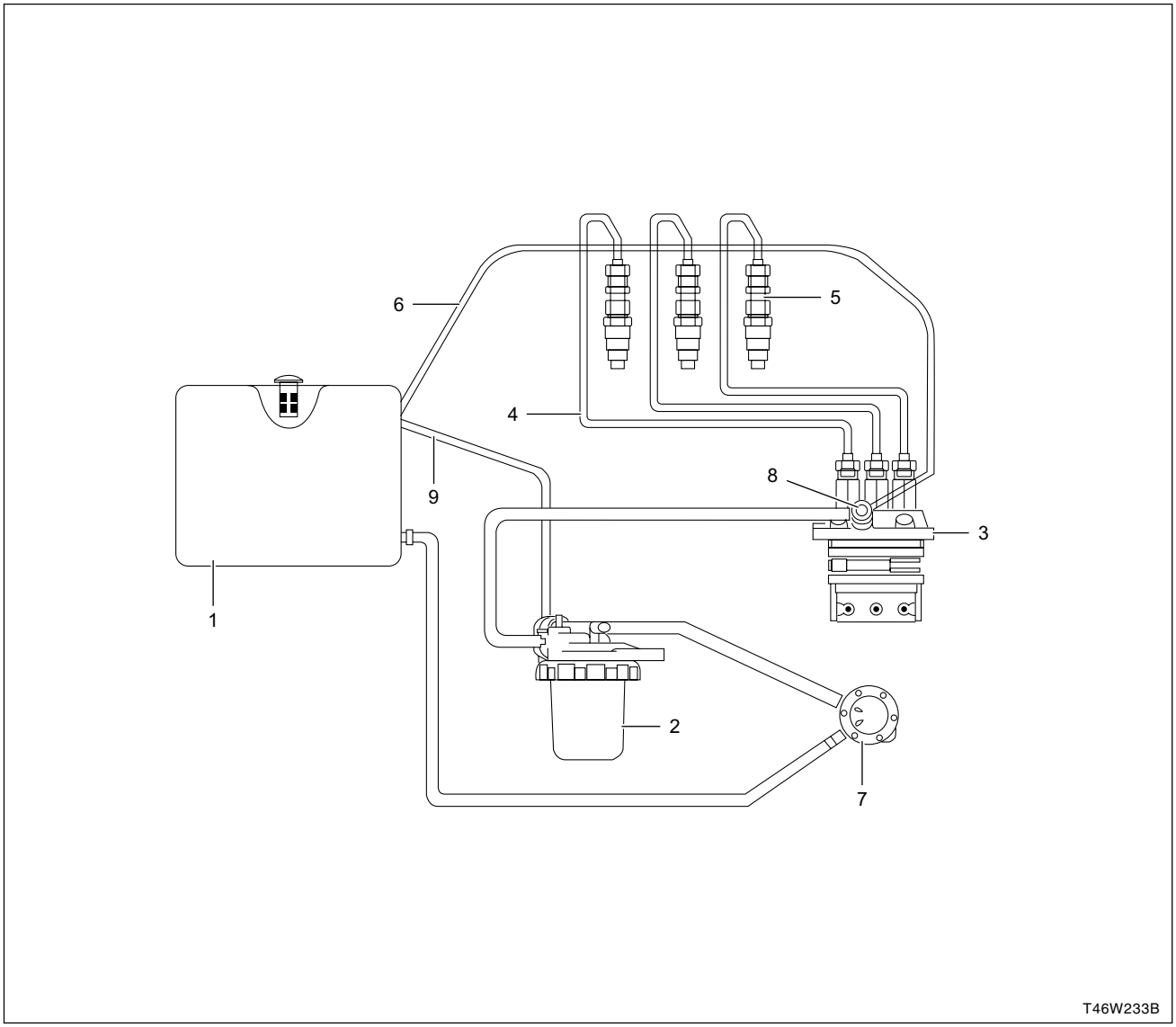

(1) Fuel Tank
(2) Fuel Filter
(3) Fuel Injection Pump
(4) Injection Pipe
(5) Injection Nozzle
(6) Fuel Overflow Pipe (Hose)
(7) Fuel Feed Pump
(8) Bleeding Bolt
(9) Bleeding Hose

The fuel in the fuel tank (1) is drawn to the fuel feed pump (7) and then is supplied to the fuel injection pump (3) passed through the fuel filter (2). Then, the fuel injection pump feeds the fuel to the injection nozzles (5) which then inject the fuel into the cylinders for combustion. The excessive fuel from the fuel injection pump to the injection nozzles is collected in the fuel overflow pipes (6) and returns to the fuel tank.

NOTE:

- *For air bleeding, see the next page.*

2.3.2 FUEL FILTER

The fuel from fuel feed pump enters into the filter port through the (b) port and passes through the filter paper. Then, it is drained through the (c) port and supplied to the fuel injection pump. The filter paper collects the particles bigger than 90 microns (0.0034 in.) at 20 kPa (0.2 kgf/cm², 3 psi).

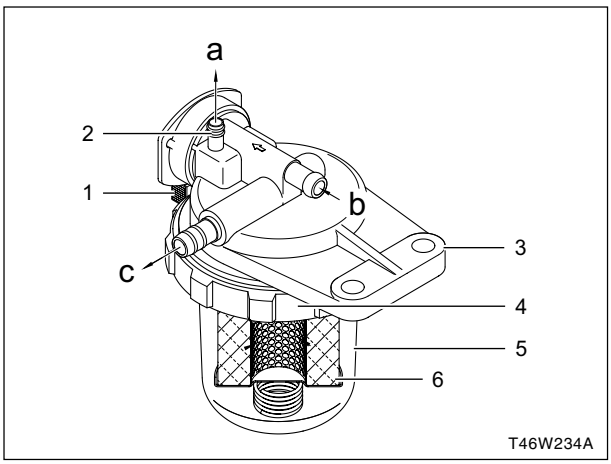

(a) To fuel tank
(b) From fuel feed pump
(c) To fuel injection pump

(1) Cock
(2) Air vent
(3) Filter body
(4) Retainer ring
(5) Port
(6) Filter element

2.3.3 BLEEDING THE FUEL SYSTEM

1. Make sure that the amount of fuel in the fuel tank is sufficient.
2. If there is air in the fuel filter, turn the filter cock (5), shown in the figure, to the air side and crank the engine. Then, the air in the filter port is discharged through the bleeding hose (1) shown in the figure.

CAUTION

- ***Do not crank for over 5 seconds. Crank the engine for several times while keeping the cranking time below 5 seconds.***

3. When the amount of fuel in the fuel filter port goes over 3/4 level, stop cranking the engine and turn the cock (5) of the figure to the “ON” position.

NOTES:

- *The bleeding process could be skipped if installing the fuel port after filling the bowl with fuel.*

4. Loosen the bleeding bolt (2) in the figure and crank the engine to bleed air. Then tighten the bolt again.
5. If the engine still cannot be started, loosen 1 or 2 nozzle holders (3) and crank the engine to bleed air.
6. When the air bubble is not seen anymore in the bleeding fuel, tighten the loose parts and start the engine.

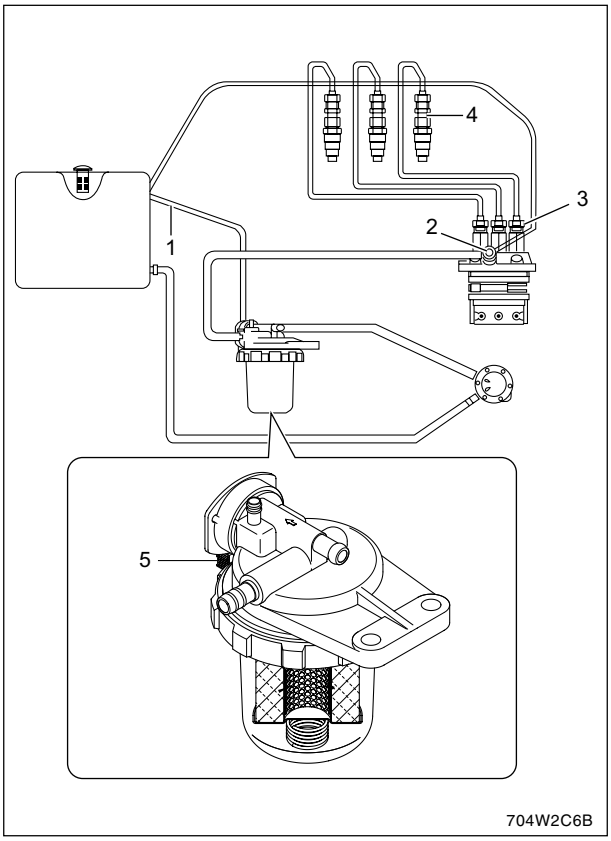

2.3.4 FUEL FEED PUMP

The diaphragm (6) is linked to the tappet (3) with the push rod (2). The tappet is reciprocated by the eccentric cam on the fuel camshaft (7).

A. INTAKE STROKE

When the diaphragm is pulled down by the spring, vacuum in the chamber (5) causes the exhaust valve (4) to close and the atmospheric pressure in the fuel tank to force the fuel into the chamber, opening the intake valve (1).

B. SCAVENGING STROKE

When the diaphragm is pushed up by the cam, the pressure in the chamber causes the intake valve to close and forces out the fuel, opening the exhaust valve.

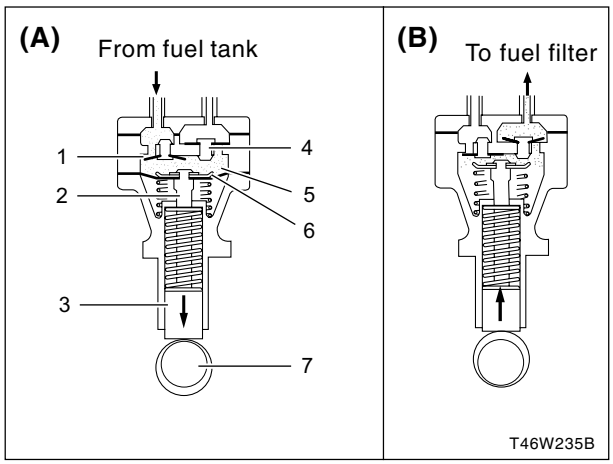

(1) Intake valve
(2) Push rod
(3) Tappet
(4) Exhaust Valve
(5) Chamber
(6) Diaphragm
(7) Fuel camshaft

2.3.5 FUEL INJECTION PUMP

This fuel injection pump is Bosch K type fuel injection pump. It features a compact and light weight design.

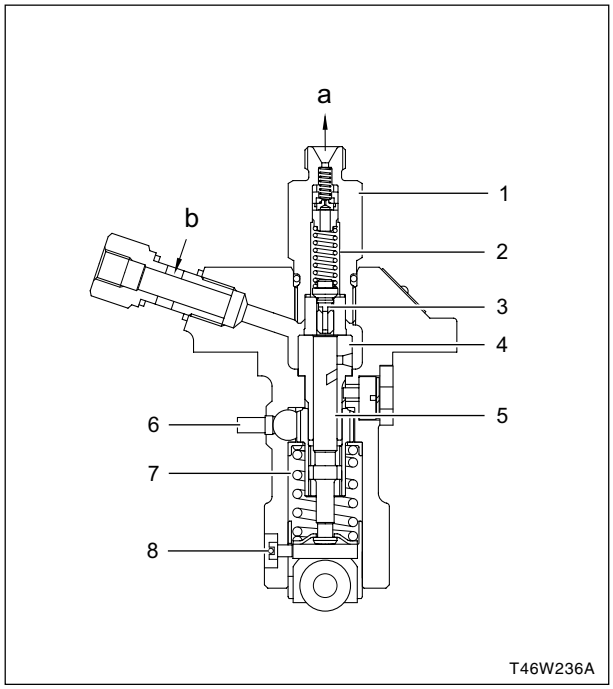

(a) To injection nozzle
(b) From fuel filter

(1) Delivery valve holder
(2) Delivery valve spring
(3) Delivery valve
(4) Cylinder
(5) Plunger
(6) Control rack
(7) Plunger spring
(8) Tappet

A. PUMP ELEMENT

The pump element (1) consists of a plunger (3) and cylinder (2) which their sliding surfaces are finely machined to maintain the fuel tightness. The plunger (3) is installed in the control sleeve (5) and the sleeve is engaged with the control rack that rotates the plunger in the cylinder to control the amount of fuel delivered.

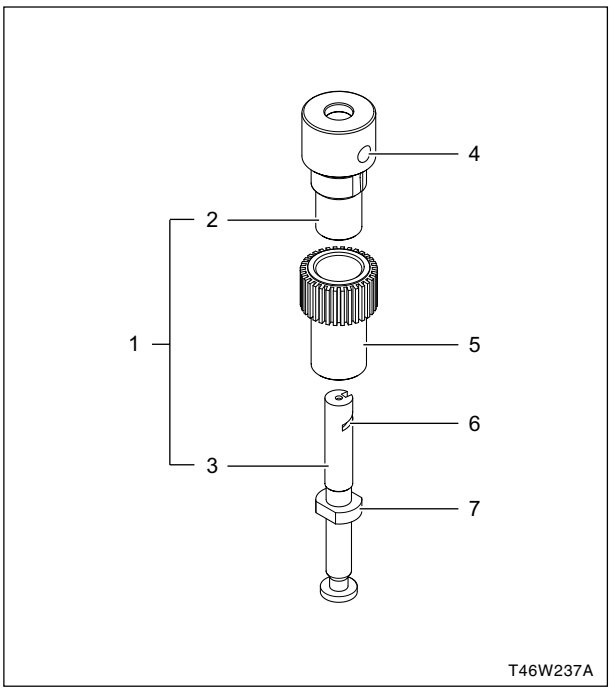

(1) Pump element
(2) Cylinder
(3) Plunger
(4) Feed hole
(5) Control sleeve
(6) Control groove
(7) Sliding surface

B. OPERATION OF PUMP ELEMENT

a. Before delivery

As the plunger (2) lowers, fuel is drawn into the delivery chamber (1) through the feed hole (4) from the fuel chamber (5).

b. Beginning of delivery

When the plunger is pushed up by the cam and the head of the plunger closes the feed hole (4), the pressure in the delivery chamber (1) rises to push the delivery valve (3) open.

c. Delivery

While the plunger (2) is rising, delivery of fuel continues.

d. End of delivery

When the plunger rises further and the control groove (6) on its periphery meets the feed hole, the injection stops because the pressure in the delivery chamber (1) is reduced to the opening pressure.

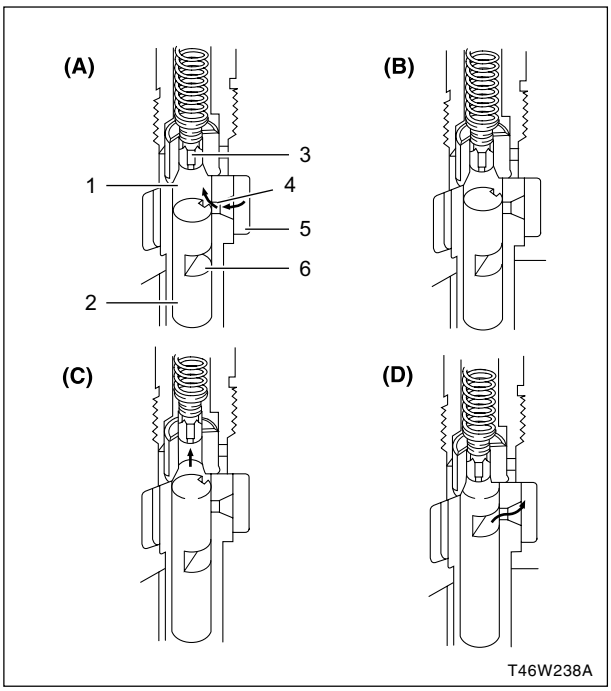

(1) Delivery chamber
(2) Plunger
(3) Delivery valve
(4) Feed hole
(5) Fuel chamber
(6) Control

C. AMOUNT OF FUEL DELIVERY

a. No fuel delivery

When the control rack (3) is at the engine stop position, the lengthwise slot (1) on the plunger (2) aligns with the feed hole (5). The pressure in the delivery chamber does not build up and no fuel is forced to the injection nozzle since the delivery chamber (4) is opened to the feed hole during the entire stroke of the plunger.

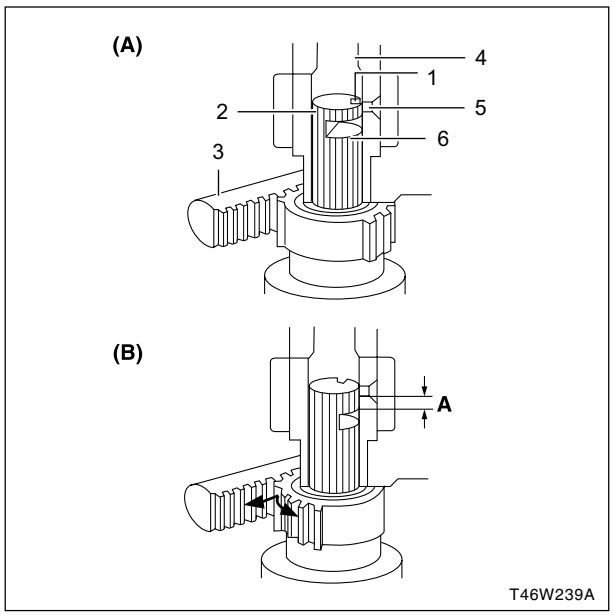

(1) Slot
(2) Plunger
(3) Control rack
(4) Delivery chamber
(5) Feed hole
(6) Control groove

b. Fuel delivery

The plunger is rotated by the control rack and the feed hole is not aligned with the lengthwise slot. When the plunger is pushed up, the feed hole is closed by the plunger. The pressure in the delivery chamber builds up and forces the fuel to the injection nozzle until the control groove (6) meets the feed hole. The amount of the fuel to be forced into the nozzle corresponds to distance A. In the above figure, the amount of injected fuel in (c) is larger than the amount of injected fuel in (b).

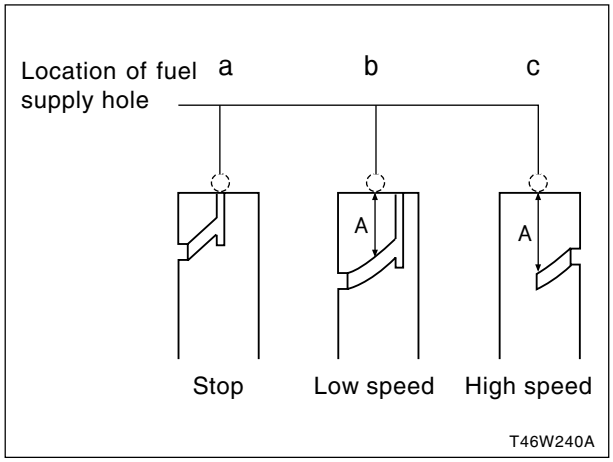

D. DELIVERY VALVE

The delivery valve (2) prevents the fuel in the injection pipe from flowing back into the delivery chamber and the fuel in the injection nozzle from dribbling after injection.

The relief plunger (6) sucks the fuel back from the injection pipe to prevent the leakage dribbling and unnecessary subsequent injection after the major injection.

The stroke of A corresponds to the amount of fuel sucked back (35 mm^3).

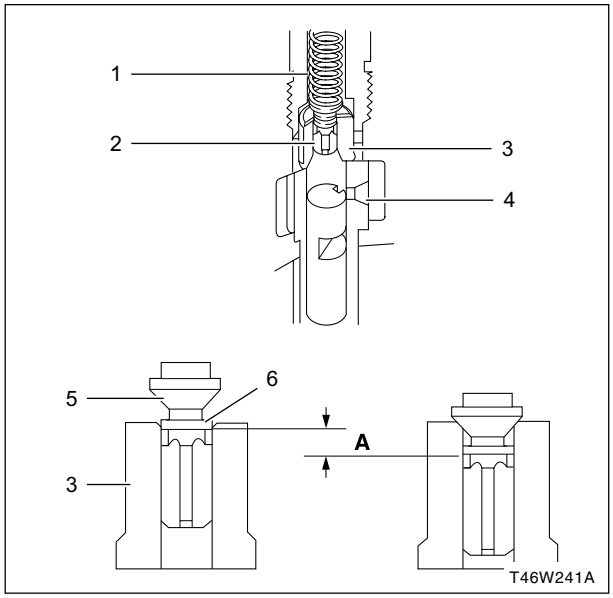

(1) Valve spring
(2) Delivery valve
(3) Valve seal
(4) Fuel chamber
(5) Valve face
(6) Relief plunger

E. INJECTION NOZZLE

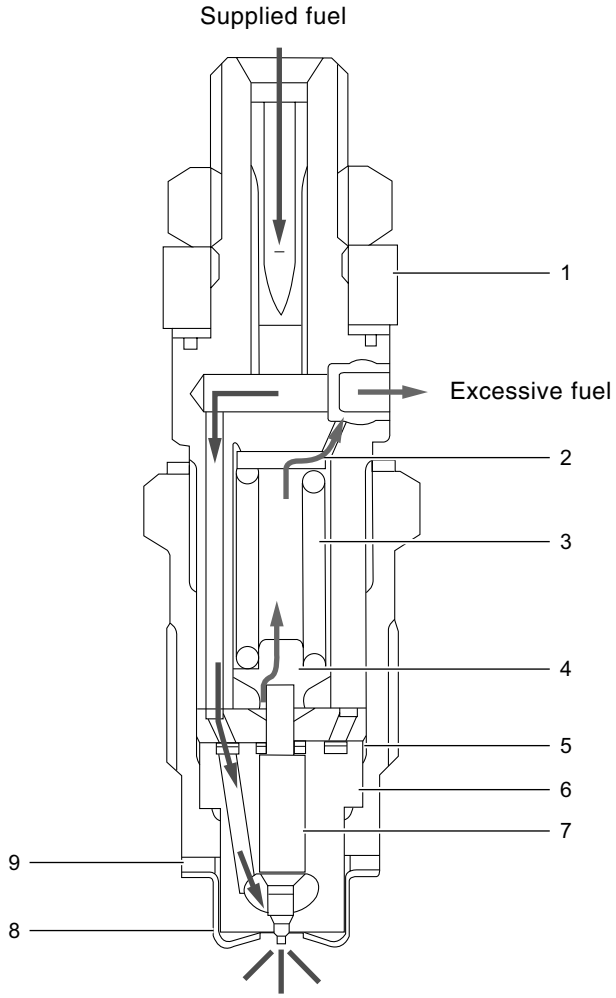

(1) Nozzle holder assembly
(2) Adjusting washer
(3) Nozzle spring
(4) Push rod
(5) Lock nut
(6) Nozzle body
(7) Needle valve
(8) Heat seal
(9) Packing

This injection nozzle is throttle type nozzle. It features the low fuel consumption and works well with DAEDONG combustion chamber. The nozzle valve opening pressure is about 14.7 MPa (150 kgf/cm², 2134 psi). When the pressure overcomes the counterforce of nozzle valve spring (3), the pressure pushes up the needle valve (7) constantly and then the proper amount of fuel is injected into the swirling air in the combustion chamber for combustion.

The opening pressure can be adjusted by adding or reducing the washer (2). A washer of 0.1 mm corresponds to 980 kPa (10 kgf/cm², 142 psi) change in opening pressure. The heat seal (8) is adopted to improve the durability and reliability of the nozzle.

2.4 GOVERNOR SYSTEM

2.4.1 BASIC PRINCIPLE OF GOVERNOR SYSTEM

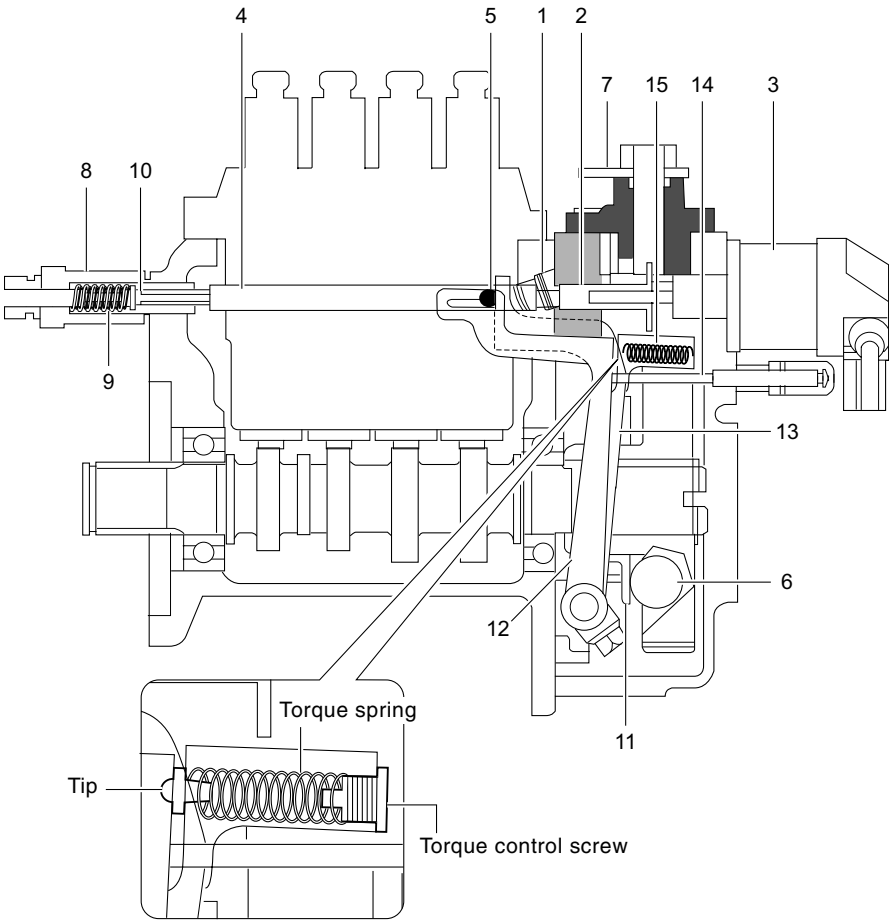

(1) Governor Spring 1, 2
(2) Solenoid Guide
(3) Stop Solenoid
(4) Pump Rack
(5) Rack Pin
(6) Steel Ball
(7) Governor Lever
(8) Idle Spring
(9) Start Spring
(10) Idle Shaft
(11) Governor Sleeve
(12) Fork Lever 2
(13) Fork Lever 1
(14) Fuel Limit Bolt
(15) Torque Spring

As shown in the above figure, the steel ball (6) in the fuel camshaft gear is supported by the governor sleeve (11) to prevent from coming out. The sleeve pushes the fork lever 1 (13) to transfer the power to the fuel injection pump pin (5).

2.4.2 OPERATION OF GOVERNOR

A. WHEN STOPPED

The fuel is blocked since the solenoid (3) pushes the speed control rack (4) to the left.

B. WHEN TURNING THE KEY SWITCH ON

When the electromagnet in the stop solenoid operates and the pin is retracted, the speed rack (4) of the fuel injection pump is pushed to the right by the start spring (9) and the start shaft (10) to supply the sufficient amount of fuel to start the engine.

C. WHEN STARTING THE ENGINE AND RUNNING THE ENGINE AT LOW IDLE SPEED

When the engine is started, the steel ball (6) pushes the sleeve (11) to the left as the centrifugal force of the steel ball increases. Therefore, the governor fork lever 1 (13) pushes the speed rack (4) of the pump to the left to reduce the amount of fuel supplied.

As the speed rack is stopped by the idle spring (8), it keeps the balance with the centrifugal force of the steel ball so that at least minimum amount of fuel is delivered for stable engine running at idle speed.

D. ACCELERATION AND DECELERATION

When depressing the accelerator pedal, the governor spring (1) pulls the fork lever 2 (12) to the right and then pushes the fork lever 1 (13) to the right. The fork lever (13) is stopped by the sleeve (11).

When the centrifugal force of the steel ball (6) that is proportional to the engine speed is balanced with the tension of the governor spring (1) that is determined by the driver, the stable speed is maintained.

E. LOAD INCREASE AT HIGH SPEED

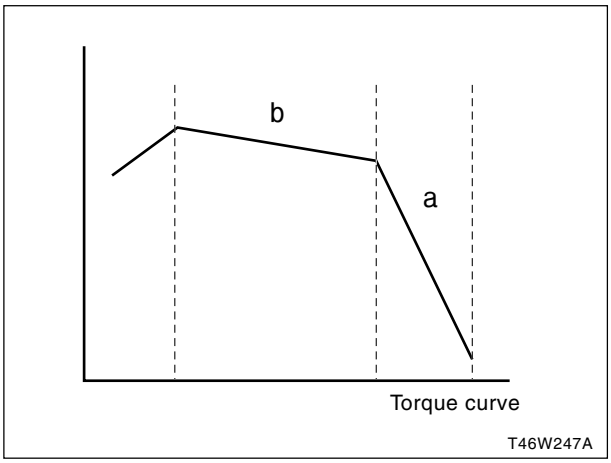

When a load is applied to the engine running at a high speed, the centrifugal force of steel ball (6) decreases as the engine speed drops. Also, the fork lever 2 (12) is pulled to the right by the governor spring until it contacts the fuel limit bolt (14). Until then, the amount of injected fuel per one stroke of the injector plunger and the torque increase.

This range (a) is between the max. speed point with no load and the max. power point of the torque curve.

When the fork lever 2 is blocked by the fuel limit bolt (14) and does not move any more and the load is increased, the centrifugal force of steel ball drops further and the torque spring (15) compressed between the fork lever 1 and 2 is loosened. Then, the fork lever 2 moves to the right until the torque spring is free, and the amount of fuel supplied and the torque increase simultaneously.

This range (b) is between the max. power and the max. torque point in the torque curve.

IMPORTANT

- ***The fuel limit bolt (14), idle spring (9) and max. rpm setting bolt are set at factory. Unauthorized adjustment of such components can negatively effect the performance of the engine. Therefore, never adjust them without permission from DAEDONG. Such action violates the EPA regulation and also can void the warranty.***

F. WHEN STOPPED

When the key switch is moved to the “OFF” position, the stop solenoid power is cut off to release the electromagnet. Therefore, the stop pin comes off by the return force of the spring and pushes the solenoid guide (2) and fuel injection pump rack to the stop position to stop the engine.

2.5 PCV VALVE

2.5.1 PCV (POSITIVE CRANKCASES VENTILATION)

The PCV system is a system that prevents air pollution by returning the blow-by gas to the intake manifold through the bleeding pipe of the cylinder head cover for recirculation of the gas. (However, the turbo charged engine has the open crankcase type that discharges the blow-by gas to the air.)

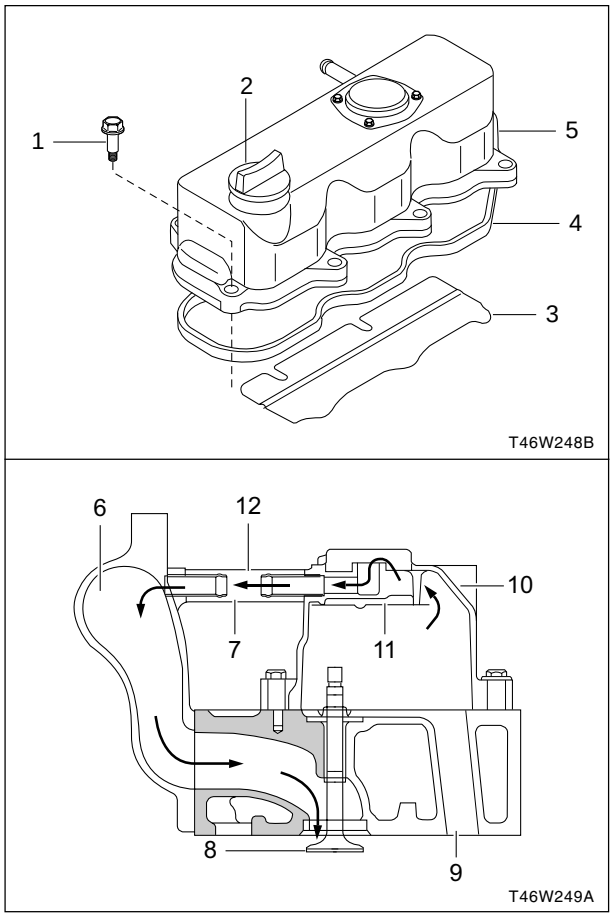

(1) Head Cover Bolt
(2) Oil Filler Cap
(3) Oil Baffle Plate
(4) Head Cover Gasket
(5) Cylinder Head Cover
(6) Intake Manifold
(7) Bleeding Pipe
(8) Intake Valve
(9) Cylinder Head
(10) Cylinder Head Cover
(11) Oil Baffle Plate
(12) Bleeding Pipe Connection

3. TROUBLESHOOTING

ENGINE DOES NOT START.

- Crankshaft does not turn
  - Frictional resistance of moving parts is too much
    - Crankshaft and camshaft have seized up.
    - Piston and cylinder liner have seized up.
    - Bearings are oil-stuck.
    - Lubrication system not working property.
  - Starter faulty.
  - Battery capacity is low or terminal loose.
- Crankshaft turns
  - No or small fuel injection sounds.
    - Fuel supply to injection pump is insufficient.
      - Fuel pipe broken.
      - Air enters fuel pipe through connection.
      - Fuel filter clogged.
      - Fuel pump faulty.
    - Injection pump does not send on fuel.
      - Plunger has worn or seized up.
      - Delivery valve spring broken.
      - Delivery valve not completely oil-tight.
    - Fuel does not inject through injection nozzle.
      - Needle valve stuck.
      - Needle spring broken.
      - Injection pressure maladjusted.
      - Injection pipe mounting nut loose.
  - Regular fuel injection sounds.
    - Injection mistimed.
      - Injection timing maladjusted.
    - Compressed air leaks.
      - Contact between intake/exhaust valve and seat not tight.
      - Intake/exhaust valve spring broken.
      - Intake/exhaust valve stuck.
      - Gasket faulty.
      - Tightness torque of cylinder head not enough.
      - Piston ring stuck.
      - Piston ring worn.
      - Cylinder liner worn.
      - Tightness torque of injection nozzle and glow plug not enough.
    - Valve action timing improper.
      - Valve clearance excessive.

Engine does not turn normally.

- Irregular Revolution
  - Revolution is not smooth at high speeds.
    - Fuel filter clogged.
    - Fuel pipes broken or loose.
    - Injection pump wrong.
      - Air in pump.
      - Pump capacity not constant.
      - Tappet roller and pin worn.
      - Delivery valve not completely oil-tight.
    - Injection nozzle faulty.
      - Fuel leaks from nozzle tip.
      - Fuel not spraying properly.
    - Governor spring deformed.
    - Valve clearance incorrect.
  - Idling not smooth.
    - Injection pump or nozzle not functioning normally.
    - Compression pressure is different among cylinders.
    - Governor not functioning normally.
      - Governor sleeve not sliding property.
      - Fork lever not functioning normally.
      - Start spring deformed.
      - Control rack not sliding property.
    - Idling maladjusted.
      - Idling regulator maladjusted.
      - Accelerator rod maladjusted.

Engine output insufficient.

- Slow engine revolutions.
  - Main moving parts have almost seized up.
  - Engine overheated.
  - Injection mistimed.
  - Governor not functioning normally.
  - Fuel supply insufficient.
    - Filter clogged.
    - Fuel pipe broken or loose.
    - Injection pump's capacity not enough.
    - Nozzle needle valve worn.
  - Compression pressure not enough.
    - Air leaking.
    - Air cleaner clogged.

Color of exhaust fumes not normal.

- White or blue exhaust fumes.
  - Lubricant rises through piston gap.
    - Piston ring stuck.
    - Piston ring worn.
    - Excessive gap between cylinder liner and piston.
    - Too much oil.
  - Injection delayed.
  - Compression pressure insufficient.
- Black or dark gray exhaust fumes.
  - Injection mistimed.
    - Injection too early.
    - Injection delayed.
  - Fuel pump's injecting capacity varies.
    - Plunger does not return completely because spring is stuck or broken.
    - Plunger worn.
  - Nozzle does not inject fuel properly.
    - Needle valve stuck.
    - Nozzle spring broken.
    - Too much carbon sticks to nozzle tip.
    - Injection pressure too low.
  - Compressed air leaks.
  - Not enough air.

Excessive lubricant consumption.

- Excessive gap between piston and liner.
- Piston ring stuck.
- Piston ring worn.
- Excessive gap between intake/exhaust valve and valve stem.
- Valve stem seal broken.
- Oil leaks from defective packings.

Lubricant increasing.

- Fuel mixed with oil.
  - Injection pump plunger leaks much fuel.
  - Fuel pump leaks much fuel.
- Water mixed with oil.
  - Head gasket packing faulty.
  - Crankcase cracked.
- Gear oil mixed with oil.
  - Hydraulic pump's oil seal broken.

4. MEASUREMENT AND ADJUSTMENT

4.1 FAN BELT

1. Measure the deflection, depressing the belt halfway between the fan drive pulley and the alternator pulley at 78 N (8 kgf, 18 lbs) of force.
2. If the deflection is not between the factory specifications, loosen the bolts and nuts, and relocate the alternator to adjust.
3. If the belt is damaged or worn (See figure), replace the belt.

Belt tension (direction)	Factory spec	7 ~ 9 mm 0.28 ~ 0.35 in.
		at 78 N (8 kgf, 18 lbs) of force

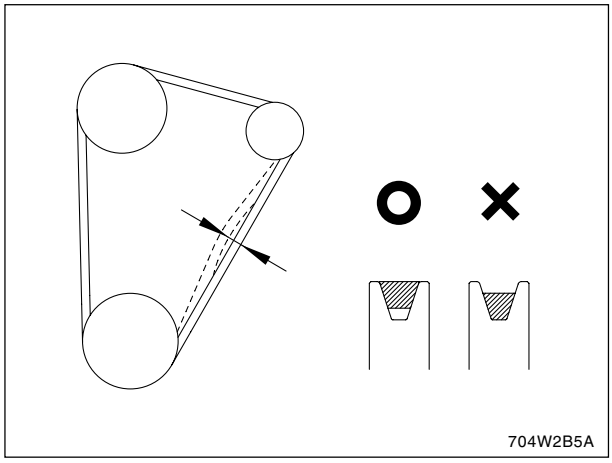

4.2 ENGINE BODY

4.2.1 CHECKING AND ADJUSTING

A. COMPRESSION PRESSURE

1. Run the engine until warmed up.
2. Stop the engine and remove the air cleaner, the muffler and all nozzle holders.
3. Connect a compression tester to the nozzle holder hole.
4. Pull the stop lever to cut the fuel and run the engine with the starter at 250 ~ 350 rpm for 5 ~ 10 seconds.
5. Measure the maximum pressure while running, several times.
6. If the pressure does not reach the allowable limit, apply a small amount of oil to the cylinder wall through the nozzle holder hole and check the pressure again.
7. If the pressure raises after oil is apply, check the cylinder wall and piston ring.
8. If the pressure is still low, check the top clearance, valve clearance and cylinder head.

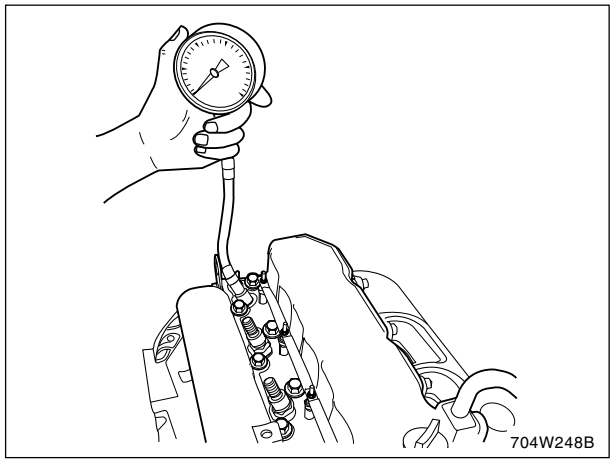

Compression pressure	Factory spec.	3.24 ~ 3.73 MPa 33 ~ 38 kgf/cm^2 470 ~ 541 psi
	Allowable limit	2.55 MPa 26 kgf/cm^2 370 psi
Difference between two cylinders	Allowable limit	10 %

NOTE:

- *Check the compression pressure with the specified valve clearance for proper air in taking.*

4.3 VALVE CLEARANCE

1. Remove the cylinder head cover and the timing window cover on the flywheel housing and all glow plugs.
2. Turn the flywheel and align the 1 TC mark mark with the timing mark of window on the flywheel housing. This will position the 1st cylinder valves at the top dead center during compression stroke.
3. Measure the clearance at the valves marked with in the table below with a feeler gauge.
4. If the clearance is not within the factory specifications, turn the adjusting screw to adjust.
5. Turn the flywheel just one turn to position the 1st cylinder valves at the top head center during overlap.
6. Measure the clearance at the valves marked with in the table below with a feeler gauge.
7. If the clearance is not within spec. ; adjust. See above.

Factory spec.	3A139/ 3A150	In. : 0.25 mm 0.0098 in.
		Ex. : 0.30 mm 0.0118 in.
	3A165 TD1300	In. : 0.1 mm 0.0039 in.
		Ex. : 0.1 mm 0.0039 in.

Cylinder NO.	1		2		3	
Valve	IN.	EX.	IN.	EX.	IN.	EX.
Checking	○	○	●	○	○	●

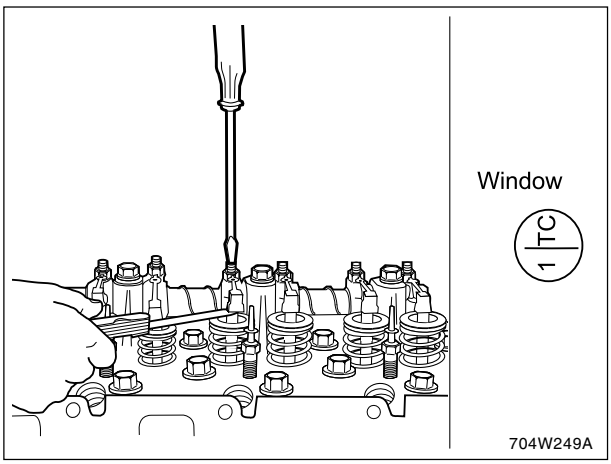

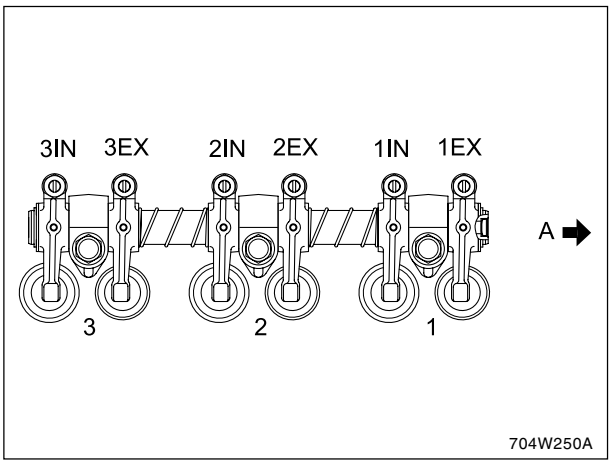

(A) Gear Case

4.4 INJECTION TIMING MEASUREMENT AND ADJUSTMENT

NOTE:

- *Perform the work with the engine installed in the tractor.*

1. Remove the engine stop solenoid.

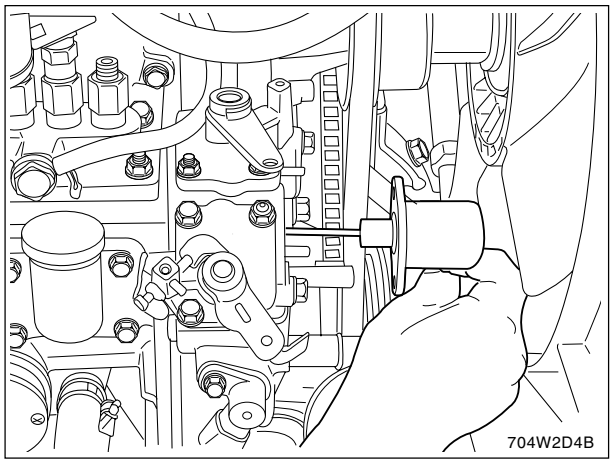

2. Remove the timing check window cover of the flywheel housing.
3. Turn the flywheel to find 1 FI mark for 3-cylinder engine on the flywheel.
4. When the mark was found, turn the crankshaft counterclockwise approx. 30° (when looking at the front of the engine).

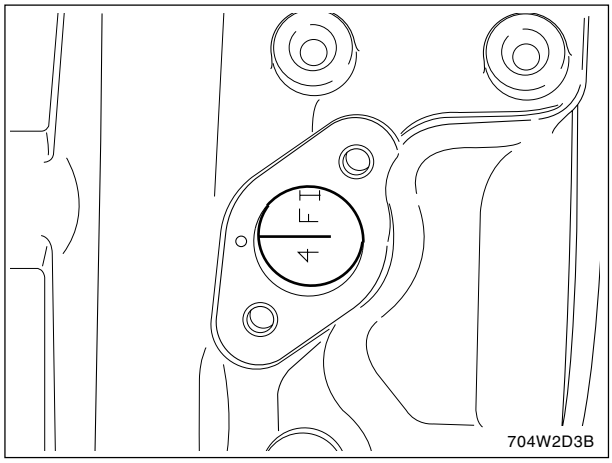

- When turning the crankshaft, use a special service tool (socket) for turning the crankshaft by engaging it with the socket wrench.

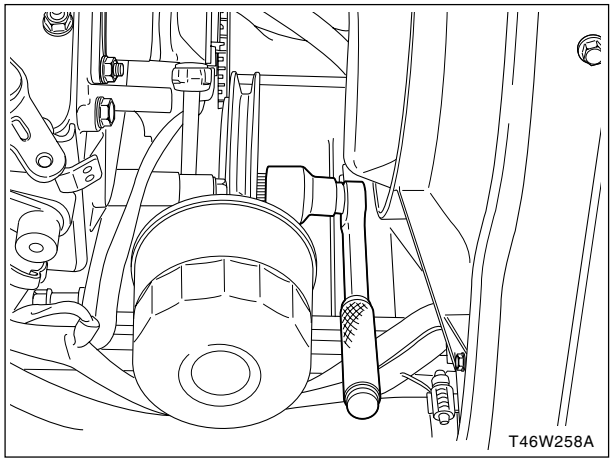

NOTE:

- *How to make the crankshaft turning socket*

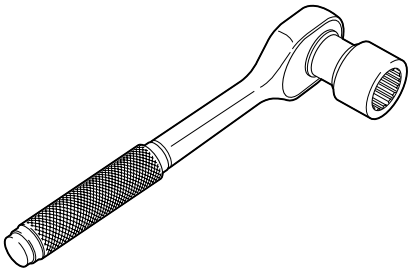

a. *Cut the coupler (DAEDONG part No.: 37805-4452-1) in half.*
b. *Weld the 1/2" socket to the coupler.*
c. *You can use DAEDONG speical tool kit (part No.: G0611-B0010).*

5. Remove the No. 1 high pressure pipe.
6. Unscrew the nozzle holder (1) slightly and tighten it when it is filled with fuel.

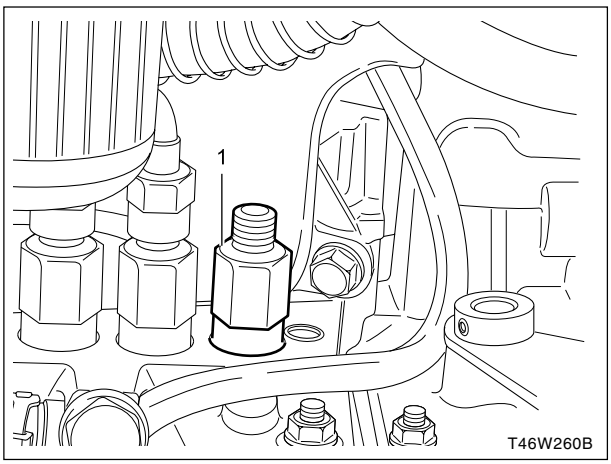

7. Remove the fuel in the nozzle holder with clean cloth and leave only small amount of fuel.
8. Observe the fuel of the nozzle holder while turning the crankshaft clockwise (when looking at the front of the engine) slowly.
9. When the amount of the fuel in the nozzle holder increases abruptly, that moment is the injection timing.
   - If the fuel increases too much, it means that the injection timing is passed already. Repeat the above process to identify the moment when the amount of fuel starts to increase.
   - If the fuel does not increase, it means that it is the exhaust cycle. Therefore, turn the crankshaft 360° to find the compression cycle and repeat the above procedures.
10. Mark the measured injection timing on the flywheel through the timing window and measure the distance between the “1 FI” and the mark you made.

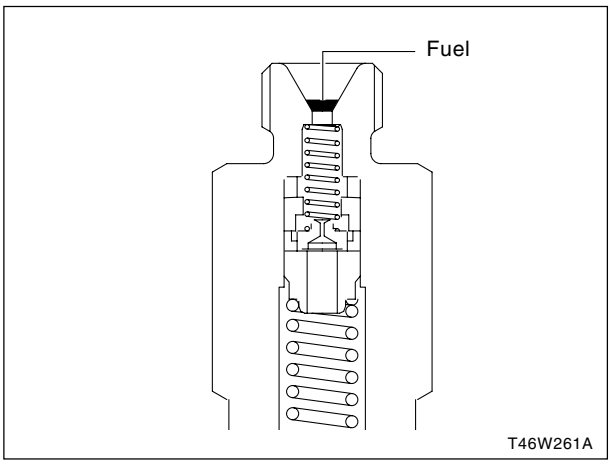

11. To advance the injection timing, reduce the amount of shims. To delay the injection timing, increase the amount of shims(2).

Model	Injection timing	Diameter of flywheel	Flywheel circumference for 1°	Amount of shims to adjust 1°
CK25 CK27 CK30 CK35	BTDC 18°	282 mm (11.1 in.)	2.46 mm (0.097 in.)	0.1 mm (0.004 in.)

* BTDC: Before top dead center

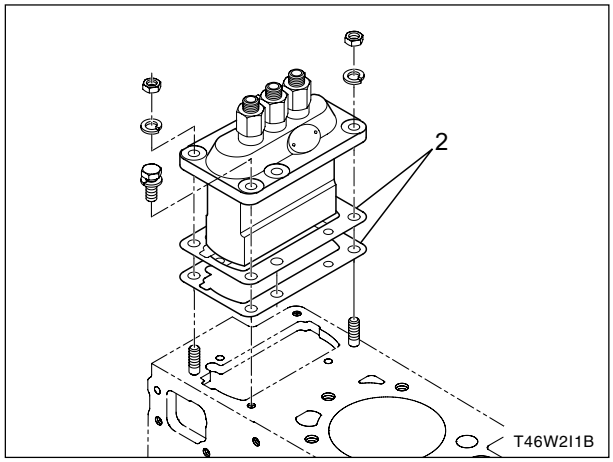

Example)

For 3A150 / 3A165, if the measured injection timing is on the 2.74 mm above the FI mark, it means that the injection timing is 1° advanced. Therefore, the measured injection timing is BTDC 19°. In this case, the injection is adjusted to 18° if adding 0.1 mm of shim under the fuel injection pump.

4.5 ENGINE OIL PRESSURE

1. Remove the oil pressure switch. Install the adapter and pressure tester in its place.
2. Start the engine and run it until it is warmed up. Measure the oil pressure at both idling and rated speed.
3. If the oil pressure is less than the allowable limit, check the oil level, oil filter, oil pump relief valve, oil passages and oil clearance.

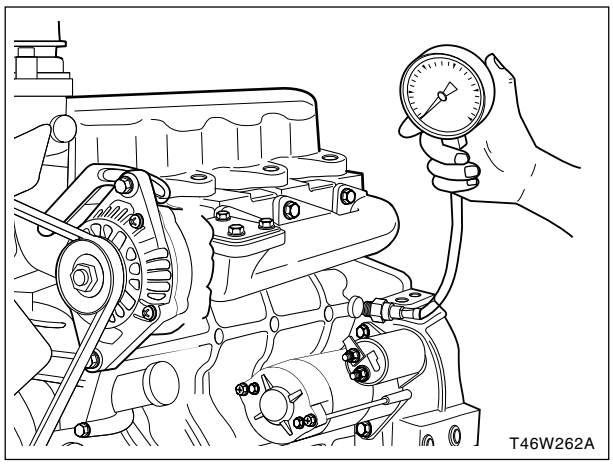

Engine oil pressure	At idle speed	Factory spec.		more than 49.0 kPa 0.5 kgf/cm² 7.11 psi
	At rated speed	3A139 3A150 3A165	Factory spec.	245 ~ 441 kPa 2.5 ~ 4.5 kgf/cm² 35.6 ~ 64.0 psi
			Allowable limit	245 kPa 2.5 kgf/cm² 35.6 psi
		TD1300	Factory spec.	245 ~ 441 kPa 2.5 ~ 4.5 kgf/cm² 35.6 ~ 64.0 psi
			Allowable limit	245 kPa 2.5 kgf/cm² 35.6 psi

(Reference)

Tightening torque	Oil pressure switch	14.7 ~ 19.6 Nm 1.5 ~ 2.0 kgf-m 10.8 ~ 14.5 lb-ft

5. EXPLODED VIEW (CK25/27/30/35)

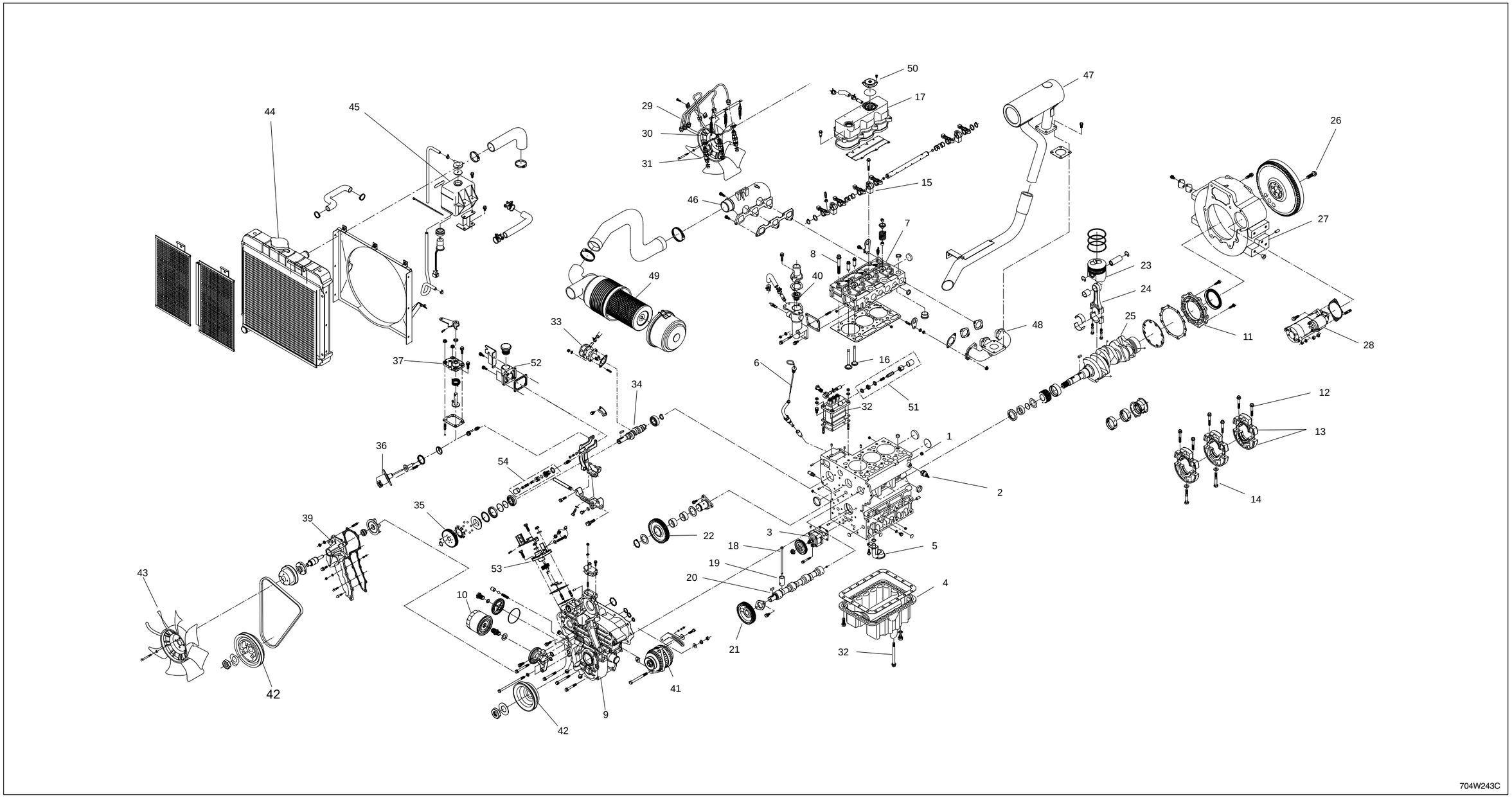

(1) Cylinder Block
(2) Oil Pressure Switch
(3) Oil Pump
(4) Oil Pan
(5) Oil Strainer
(6) Oil Gauge
(7) Cylinder Head
(8) Head Bolt
(9) Gearcase
(10) Oil Filter
(11) Mainbearing Case Cover
(12) Bearing Case Bolt 1
(13) Mainbearing Case
(14) Bearing Case Bolt 2
(15) Rocker Arm
(16) Inlet, Exhaust Valve
(17) Cylinder Hear Cover
(18) Push Rod
(19) Tappet
(20) Camshaft
(21) Camshaft Gear
(22) Idle Gear
(23) Piston
(24) Connecting Rod
(25) Crankshaft
(26) Flywheel
(27) Flywheel Housing
(28) Starter
(29) Injection Pipe
(30) Glow Plug
(31) Nozzle
(32) Fuel Injection Pump
(33) Fuel Feed Pump
(34) Fuel Camshaft
(35) Fuel Camshaft Gear
(36) Engine Stop Solenoid
(37) Manual Stop Lever
(38) Fork Lever (Governor)
(39) Water pump
(40) Thermostat
(41) Alternator
(42) Fan Drive Pulley
(43) Cooling Fan
(44) Radiator
(45) Reserve Tank Ass'y
(46) Inlet Manifold
(47) Muffler
(48) Exhaust Manifold
(49) Air Cleaner
(50) PCV V/v
(51) Idle Limit System
(52) Oil Filter
(53) Speed Control
(54) Fuel Control Limit

6. SERVICING

6.1 REMOVAL AND REASSEMBLY

6.1.1 DRAINING THE COOLANT

CAUTION

- ***Never open radiator cap when the coolant's temprature reaches boiling point.***
- ***Do not remove the radiator cap when the engine is hot. Then loosen cap slightly to the stop. Relieve any excess pressure before removing cap completely.***

1. Stop the engine and let it cool down.
2. After open the bonnet
3. To drain the coolant, open the radiator drain plug and remove radiator cap. The radiator cap must be removed to completely drain the coolant.
4. After all coolant is drained, close the drain plug.

(Filling)

- Fill water up the point between "Full" and "Low" mark on the recovery water tank.

Coolant capacity	CK25/27/35	7.4 ℓ (2.0 U.S.gal.)
	CK30	7.8 ℓ (2.1 U.S.gal.)

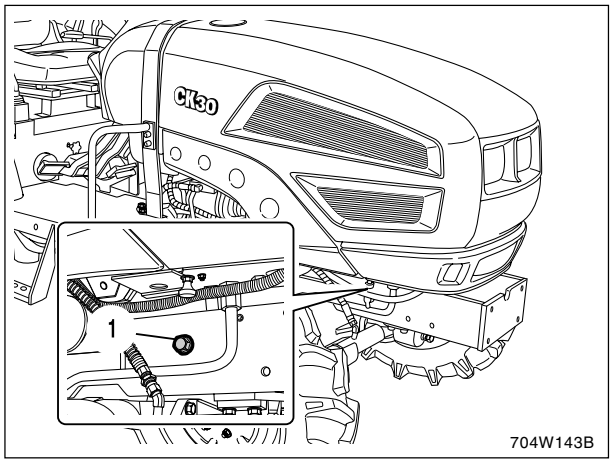

(1) Drain Plug

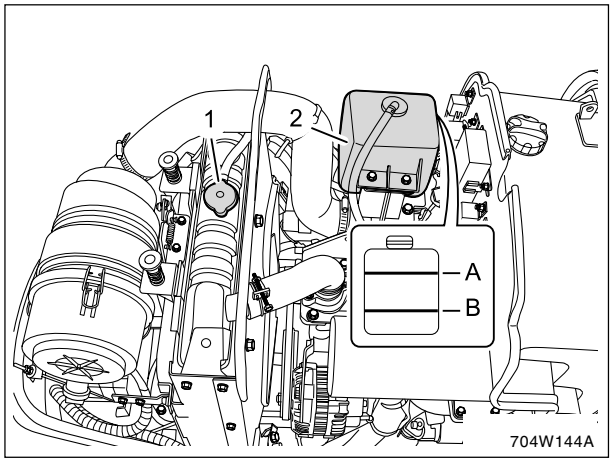

(1) Radiator Cap (A) FULL
(2) Recovery Tank (B) LOW

6.1.2 DRAINING THE ENGINE OIL

CAUTION

To avoid personal injury:

- ***Be sure to stop the engine before changing the oil.***
- ***Allow engine to cool down sufficiently, oil can be hot and can burn.***

1. To drain the used oil, remove the drain plug at the bottom of the engine and drain the oil completely into the oil pan.

   All the used oil can be drained out easily when the engine is still warm.
2. After draining reinstall the drain plug.
3. Fill with the new oil up to the upper notch on the dipstick.

Oil capacity with filter	5.8ℓ (1.53 U.S.gal.)

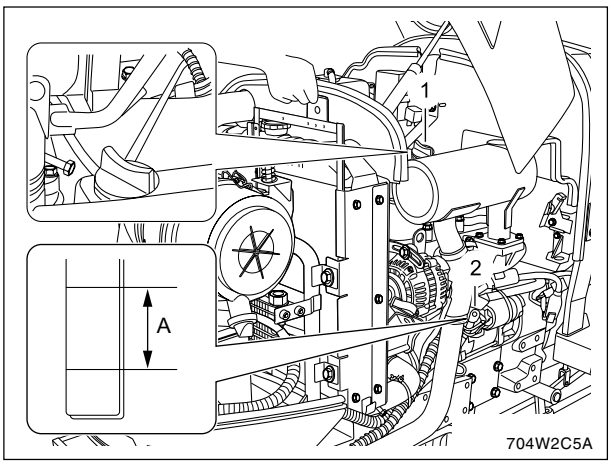

(1) Oil Inlet

(2) Dipstick

(A) Oil Level is Acceptable Within this Range

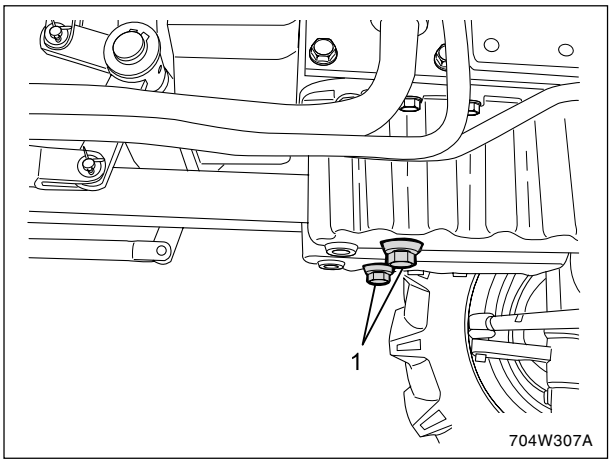

(1) Drain Plug

6.1.3 BONNET

1. Open the bonnet (1) and disconnect the electronic connector (2).
2. Remove the air-cylinder (3).
3. Remove the snap-pin, joint-pin and bonnet(1).
4. Remove the side cover (LH/RH) (4).
5. Disconnect the battery terminal (-) (5).

NOTE:

- *When disconnecting the battery cords, disconnect the (-) cord first. Connecting, (+) cable first.*

(For assembly)

After connecting the battery terminal (-), apply a little grease to it.

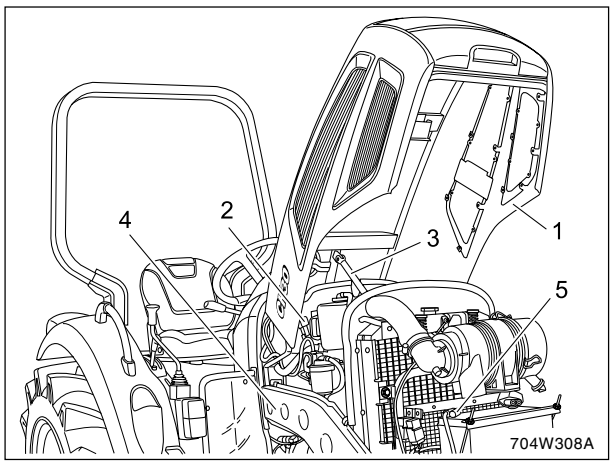

(1) Bonnet
(2) Connector
(3) Air-cylinder
(4) Side Cover
(5) Battery Terminal (-)

6.1.4 HYDRAULIC PIPE AND ELECTRIC WIRING

1. Remove the steering hoses(R, P, T).(2, 3, 4).
2. Remove the accelerator wires (hand, pedal).(5, 6)
3. Disconnect the bonnet wire harness 2 Assy.
4. Remove the rubber pipe 1 (7) out of suction pipe 3 (8).
5. Remove the hydraulic pipe (B1).(9)
6. Remove the cooling pipe 3 (HST type)
7. Remove the steering hose (L).(10)
8. Remove the cooling pipe 4 (HST type)
9. Disconnect the bonnet wire harness 1 Assy.(11)

(When reassembling)

- A hose classification
  - Steering hose P : A red tag attachment
  - Steering hose R : A white tag attachment
  - Steering hose L : A yellow tag attachment
  - Steering hose T : No tag

Item	Tightening torque
Steering hose P, R, L	9.8 Nm 1.0 kgf-m 7.2 lb-ft
Pipe bed	9.8 Nm 1.0 kgf-m 7.2 lb-ft

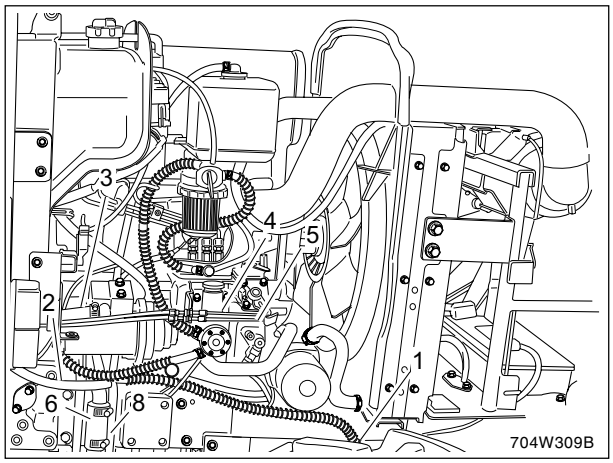

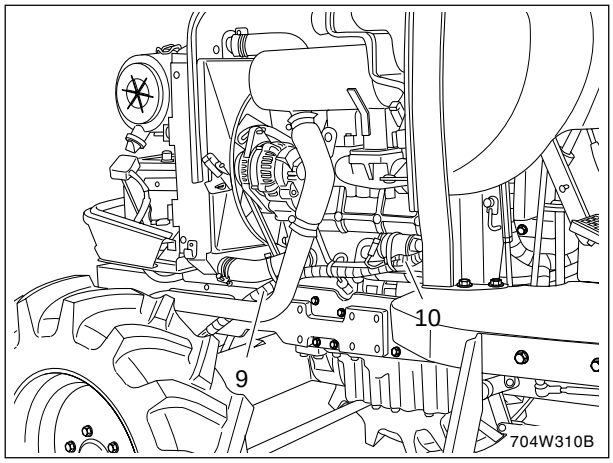

(1) Steering Hose (R)
(2) Steering Hose (P)
(3) Steering Hose (T)
(4) Accelerator Wire (Hand)
(5) Accelerator Wire (Pedal)
(6) Rubber Pipe
(7) Suction Pipe 3
(8) Hydraulic Pipe (B1)
(9) Steering Hose (L)
(10) Bonnet Wire Harness 1 Assy

6.1.5 PROPELLER SHAFT

1. Remove the bolts and slide the propeller shaft cover .
2. Tap out the spring pin (8), and then slide the coupling (2) to the rear.
3. Romove the propeller shaft and cover.

(When reassembling)

- Apply grease to the splines of the propeller shaft.

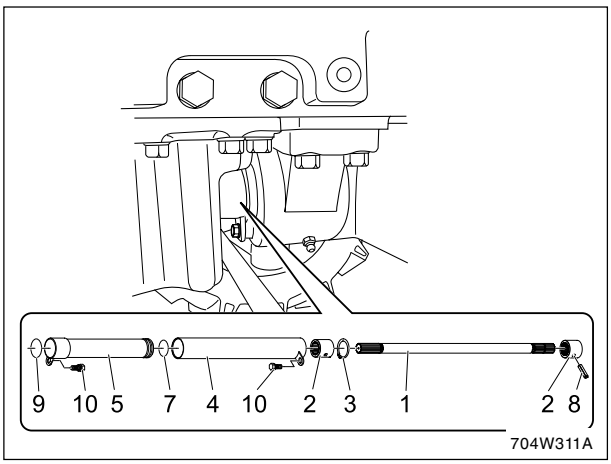

(1) Propeller Shaft
(2) Coupling
(3) Cir-Clip
(4) Propeller Shaft Cover 1
(5) Propeller Shaft Cover 2
(6) O-ring
(7) O-ring
(8) Spring Pin
(9) O-ring
(10) Bolt

6.1.6 SEPARATING ENGINE & CLUTCH HOUSING

1. Place the jacket to the bottom of the clutch housing and engine.
2. Remove the mounting bolts for the fuel tank support.
3. Separate engine and clutch housing.

(When reassembling)

- Apply grease to the spline of main shaft.
- Apply liquid gasket (Three Bond 1,211 or equivalent) to the joint face of the flywheel housing and clutch housing.

Item	Tightening torque
Bolts, nuts	48.1 ~ 55.9 Nm 4.9 ~ 5.7 kgf-m 1.004 ~ 1.167 lb-ft
Stud bolts	24.5 ~ 31.4 Nm 2.5 ~ 3.2 kgf-m 0.512 ~ 0.655 lb-ft

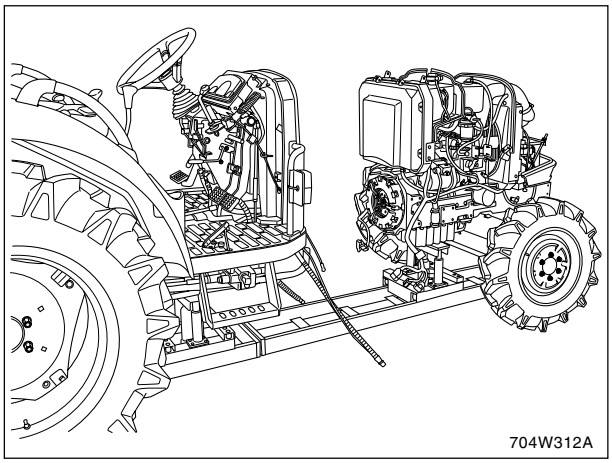

6.1.7 REMOVING CLUTCH

1. Put alignment marks on the clutch cover and fly wheel. (CK25/27/30/35)
2. Insert the clutch center tool.
3. Remove the clutch assembly.

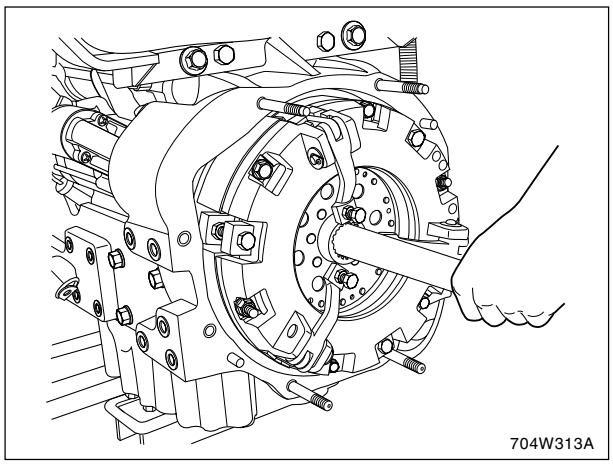

6.1.8 SEPARATING THE FUEL TANK

1. Remove the bonnet wire-harness1 (1).
2. Remove the air cleaner (2).
3. Remove the reovery tank (3).
4. Loosen bolts and remove the fuel tank (4).
5. Remove the muftler (5).
6. Remove the bonnet wire harness2 (6).
7. Remove the water pipe (7, 8)

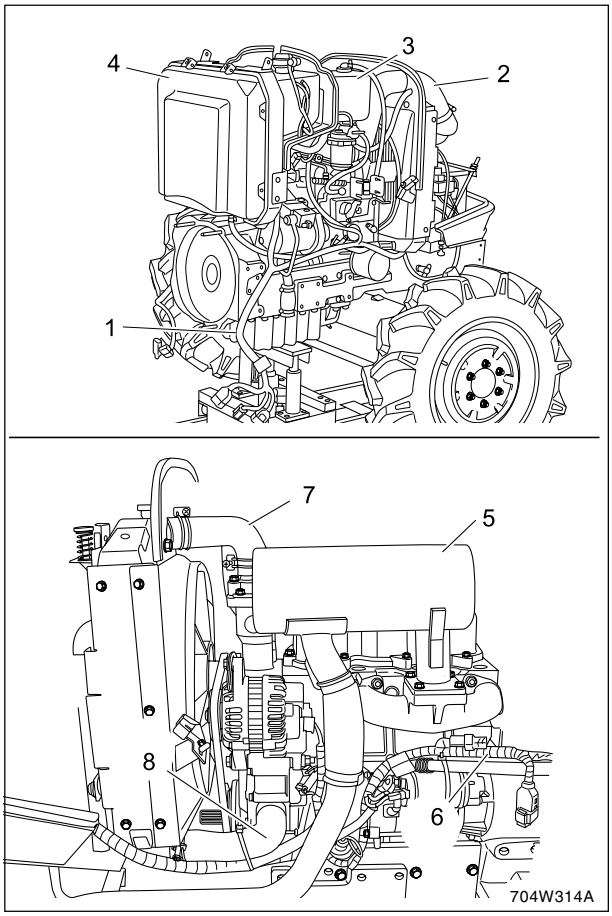

(1) Bonnet Wire Harness 1
(2) Air Cleaner
(3) Recovery Tank
(4) Fuel Tank
(5) Muftler
(6) Bonnet Wire Harness2
(7) Water Pipe (Upper)
(8) Water Pipe (Lower)

6.1.9 DISASSEMBLING FRONT AXLE FRAME

1. Lift engine with chain hook and support it.
2. Loosen bolts and remove the engine from the front axle frame.

Item	Tightening torque
M10 Bolt (Only CK30)	60.9 ~ 70.6 Nm 6.2 ~ 7.2 kgf-m 44.9 ~ 52.0 lb-ft
M12 Bolts	103 ~ 117 Nm 10.5 ~ 12.0 kgf-m 76.0 ~ 86.7 lb-ft

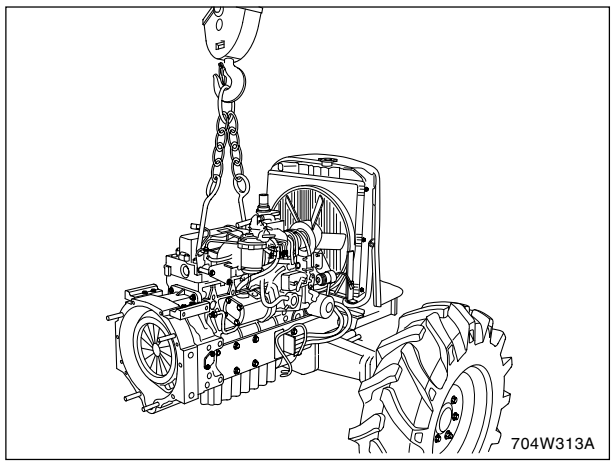

6.1.10 DISASSEMBLING OTHER ENGINE PARTS.

1. Remove the gear pump assy (1) and pump holder.
2. Remove the fan belt (2), cooling fan (3) and fan pulley.
3. Remove the dynamo assy (4).
4. Remove the start motor (5).

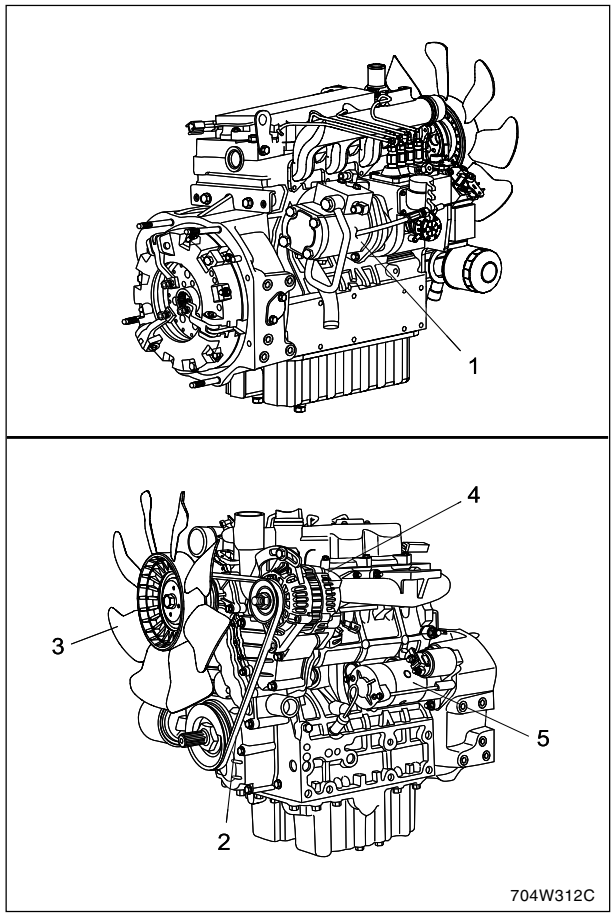

(1) Gear Pump
(2) Fan Belt
(3) Cooling Fan
(4) Dynamo Assy
(5) Starter Motor

6.1.11 CYLINDER HEAD COVER, GLOW PLUGS AND FUEL OVERFLOW PIPES

1. Remove the injection pipes and over flow pipe.
2. Remove the glow plugs.
3. Remove the injection nozzles, gaskets, and heat seals.
4. Remove the cylinder head cover.

(When reassembling)

- Check that the cylinder head cover gasket is not defective.
- Tighten the cylinder head cover cap nuts in several steps.

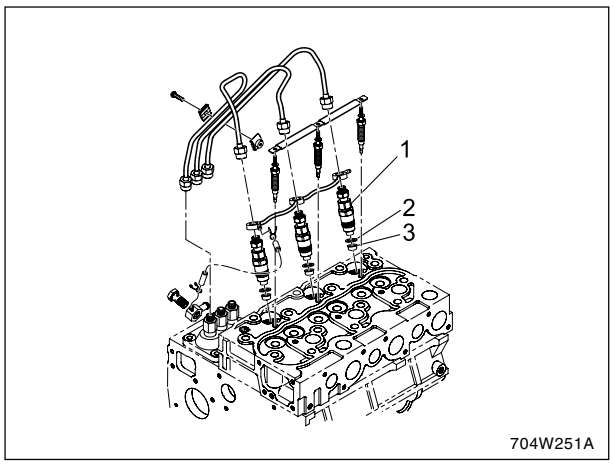

(1) Injection Nozzle (3) Heat Seal
(2) Gasket

6.1.12 HEAT SEAL REMOVAL PROCEDURE

1. Drive screw driver lightly into the heat seal hole.
2. Turn screw driver three or four times each way.
3. While turning the screw driver, slowly pull the heat seal and the injection nozzle gasket. If the heat seal drops, repeat the above procedure.
4. The heat seal and injection nozzle gasket must be changed when the injection nozzle is removed for cleaning or for service.

NOTE:

- *Use a philips screw driver that has a diameter which is bigger than the heat seal hole 1/4 in. (approx. ϕ 6 mm).*

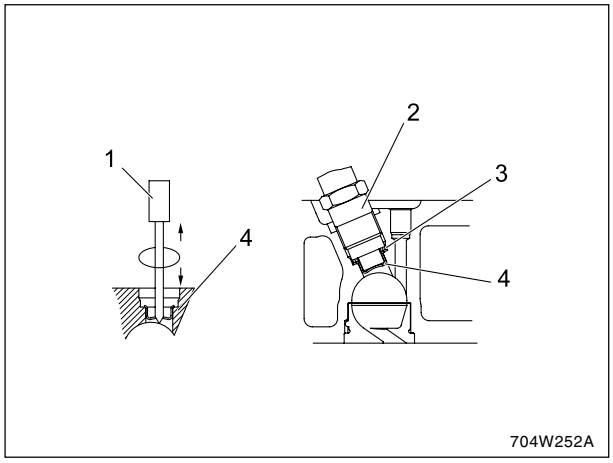

(1) Philips Screw Driver
(2) Nozzle
(3) Injection Nozzle Gasket
(4) Heat Seal

6.1.13 ROCKER ARM ASSEMBLY

1. Loosen the bolts in several steps and the specified sequence shown in the figure and remove them.
   - To loosen (3) to (1)
   - To tighten (1) to (3)
2. Remove the rocker arm assembly and the push rod.

(When reassembling)

- Rest the end of push rod at the indent of tappet and install the rocker arm assembly.
- Tighten the bolts in several steps and in the specified sequence to the specified torque. Refer to the figure.
- Adjust the valve clearance after assembling the rocker arm assembly.

Tightening torque	3A139	60.8 ~ 70.6 Nm
	3A150	6.2 ~ 7.2 kgf-m
	3A165	44.8 ~ 52.1 lb-ft
	TD1300	29.4 ~ 34.3 Nm
		3.0 ~ 3.5 kgf-m
		21.7 ~ 25.3 lb-ft

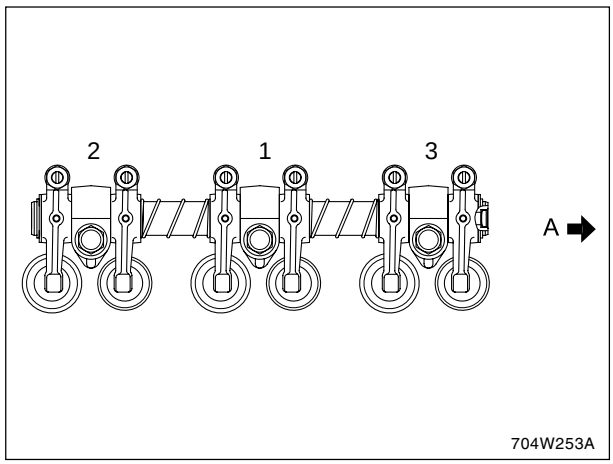

(A) Gear Case

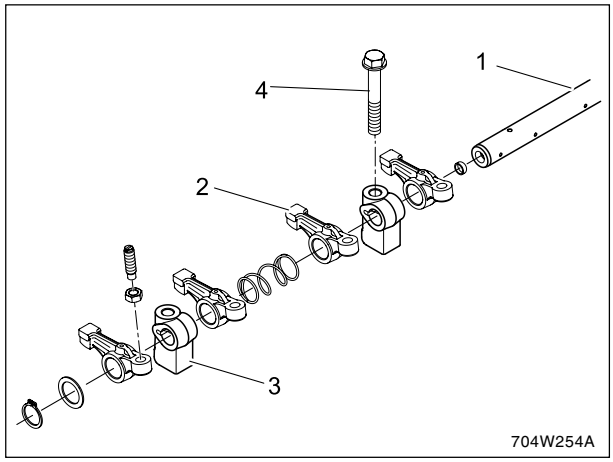

(1) Rocker Arm Shaft
(2) Rocker Arm
(3) Rocker Arm Bracket
(4) Bolt

6.1.14 CYLINDER HEAD

1. Remove the screw in the specified sequence shown in the figure and remove the cylinder head (1) and head gasket.
- To loosen (14) to (1)
- To tighter (1) to (14)
2. Remove the water flange (2).
3. Take out the tappets from the cylinder block.

NOTE:

- *Mark the cylinder number to the tappets to prevent interchanging.*

(When reassembling)

- Apply liquid gasket (Three bond 1215 or equivalent) on the both sides of the water flange gasket.
- Replace the head gasket with a new one and place on the cylinder block, be careful of its direction and side.
- When using the head gasket shim, install the shim on the cylinder head prior to the gasket.
- Before installing the tappets apply engine oil around them.

IMPORTANT

- ***Apply oil to the thread of screws and tighten in several steps and the specified sequence shown in the figure to the specified torque.***
- ***Check the torque after 30 minutes operation of the assembled engine, and adjust valve clearance.***

Tightening torque	3A139 3A150 3A165	103.0 ~ 107.9 Nm 10.5 ~ 11.0 kgf-m 75.9 ~ 79.6 lb-ft
	TD1300	78.5 ~ 83.4 Nm 8.0 ~ 8.5 kgf-m 57.9 ~ 61.5 lb-ft

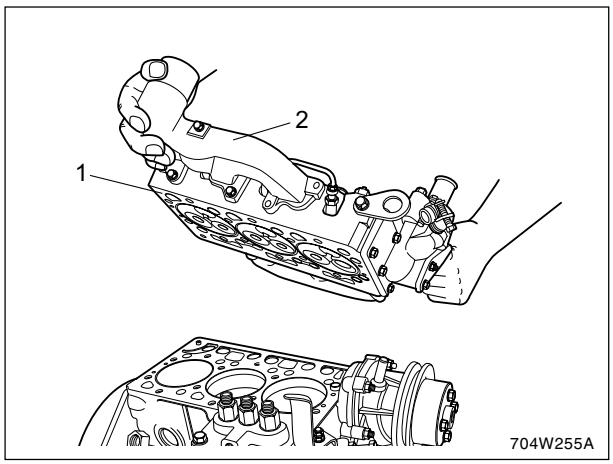

(1) Cylinder Head (2) Water Flange

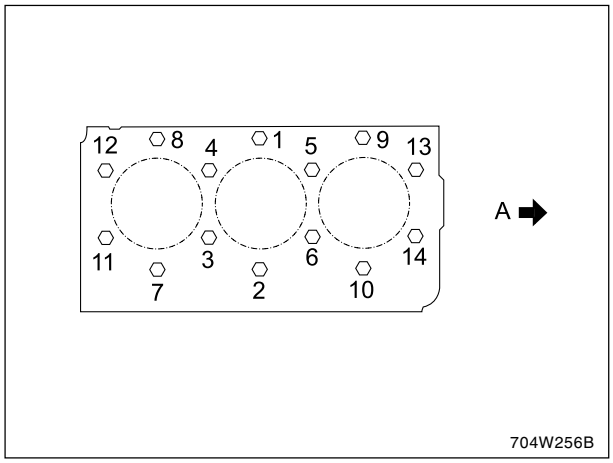

(A) Gear Caser

6.1.15 VALVE

1. Compress the valve spring and remove the collect (2).
2. Remove the retainer (3), valve spring (4), valve stem seal (5) and the valve (1).

IMPORTANT

- ***Do not interchange valves and valve parts.***
- ***Mark the cylinder number on the valve and the parts to prevent interchanging.***

(When reassembling)

- Apply oil to the stem of valve and install in the cylinder head.
- Lubricate the valve and the parts after reassem-bling.

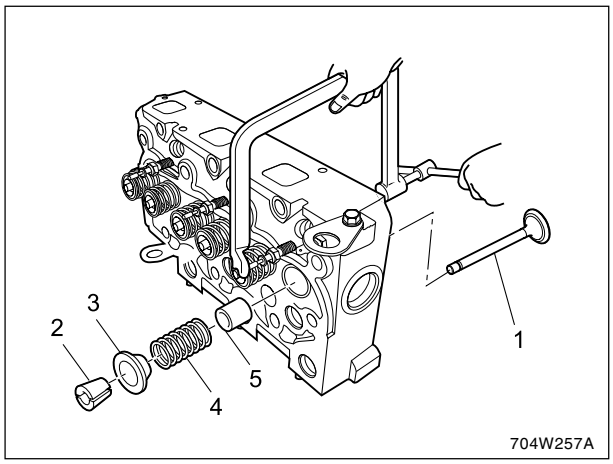

(1) Valve (4) Valve Spring
(2) Collect (5) Valve Stem Seal
(3) Retainer

6.1.16 INJECTION PUMP

A. INJECTION PUMP REMOVAL

1. Remove the injection pipes (1) and the intake manifold (2).
2. Remove the overflow pipe (3).
3. Remove the oil filler flange (4).

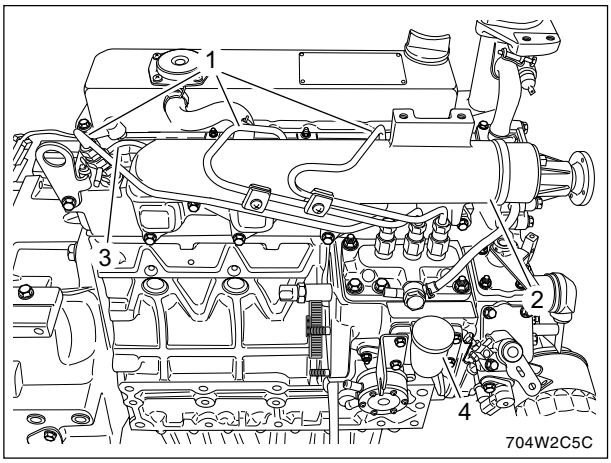

(1) Injection Pipes
(2) Intake Manifold
(3) Overflow Pipe
(4) Oil Filler Flange

4. Remove the idle adjusting bolt (1) and oil filler flange (3).
5. Remove the manual stop lever cover (4).

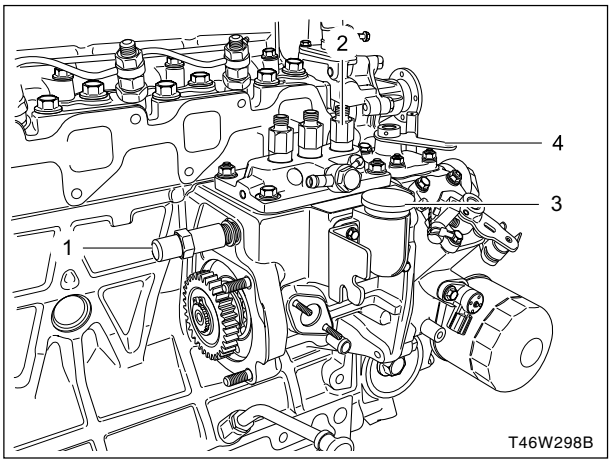

(1) Idle Adjusting Bolt
(2) Fuel Injection Pump
(3) Oil Filler Flange
(4) Manual Stop Lever Cover

6. Remove the stop solenoid (1). Be careful not to drop the stop solenoid guide (2).

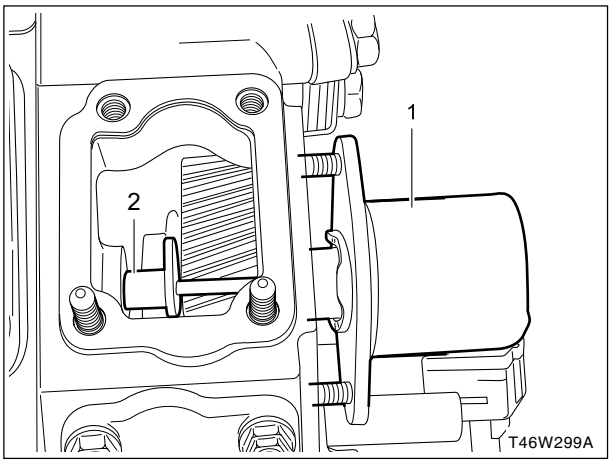

(1) Stop Solenoid
(2) Stop Solenoid Guide

7. Remove the fuel injection pump (1).
8. Keep the shims just like they were.

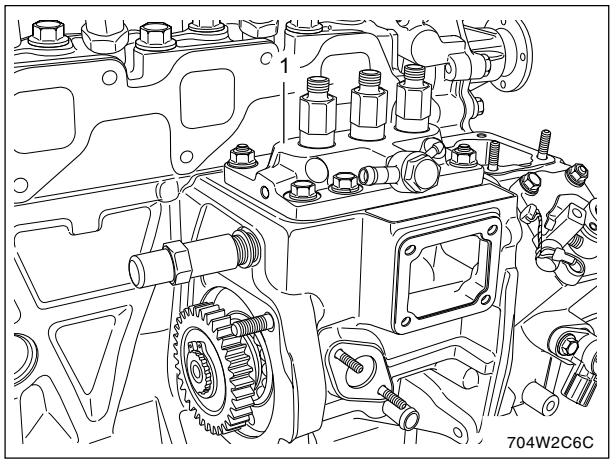

B. INJECTION PUMP INSTALLATION

1. Apply the liquid gasket (Three bond 1215, 1104 or equivalent) on the pump installation surface of the cylinder block.
2. Install the shims as they were.
3. Make sure that the lever of the pump control rack is on the outer side from the fork lever 1 when installing the pump.

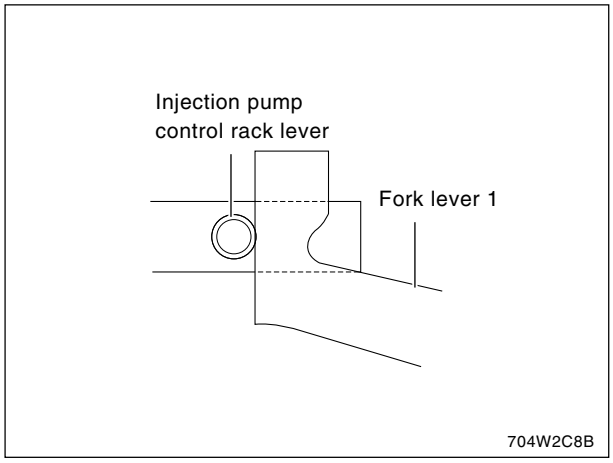

4. Tighten the nuts to the specified torque in several steps in the correct sequence as shown in the figure.

Tightening torque	M8	23.5 ~ 27.4 Nm 2.4 ~ 2.8 kgf-m 17.3 ~ 20.2 lb-ft

5. Tighten the idle limit spring mounting bolt.

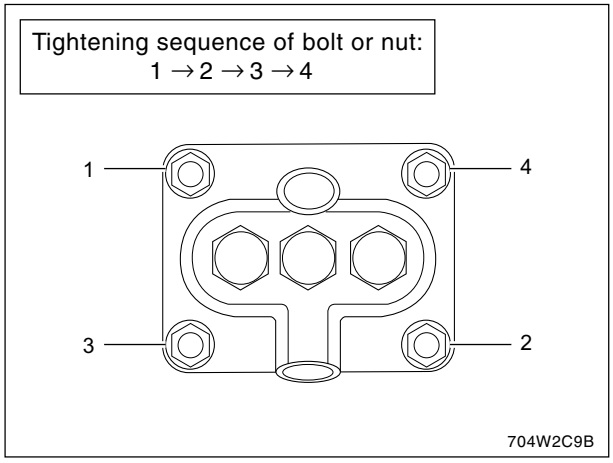

C. INJECTION PUMP DISASSEMBLY

IMPORTANT

- ***When disassembling the pump components, the amount of fuel injection should be adjusted on a designated bench.***
- ***Only authorized service personnel should disassemble or reassemble the fuel injection pump.***

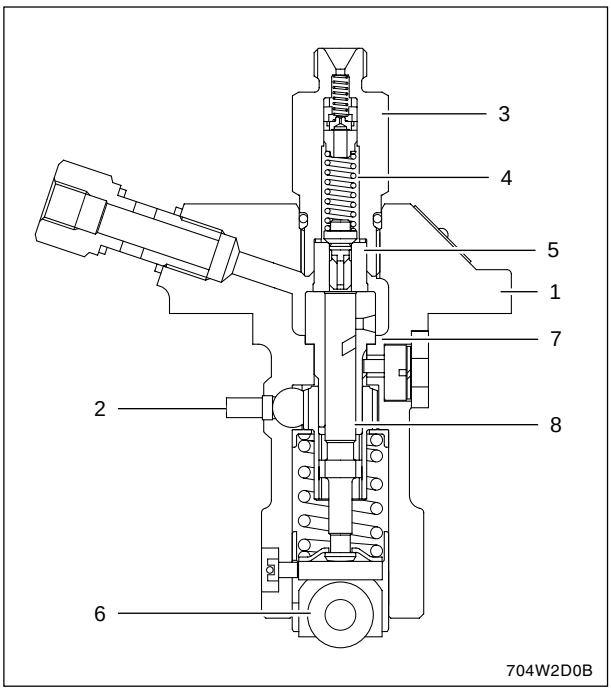

(1) Pump Body
(2) Control Rack
(3) Delivery Valve Holder
(4) Delivery Valve Spring
(5) Delivery Valve
(6) Tappet Roller
(7) Plunger
(8) Cylinder

D. NOZZLE HOLDER DISASSEMBLY

1. Secure the nozzle retaining nut (7) with a vise.
2. Remove the nozzle holder (1) and take out the internal components.

a. Installation

- Before installing the nozzle, soak it in clean fuel.
- When installing the push rod (4), be careful of its direction.

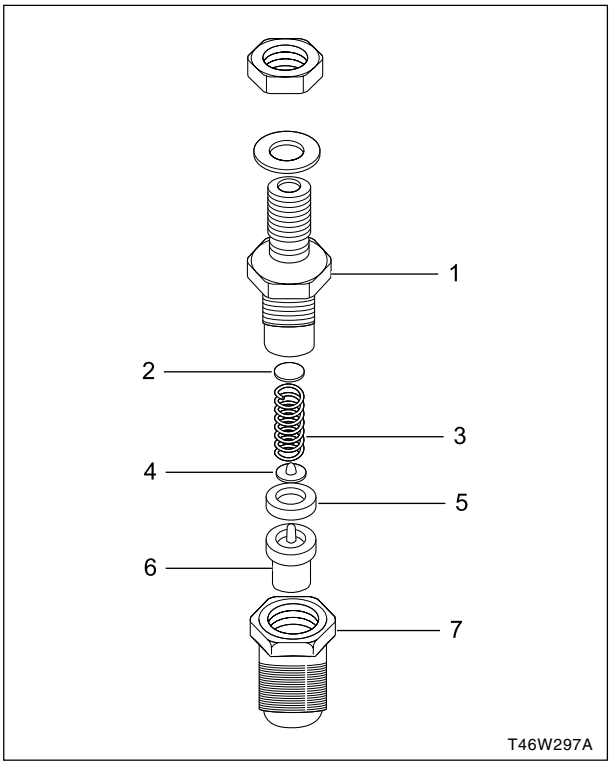

(1) Nozzle Holder
(2) Adjusting Washer
(3) Nozzle Spring
(4) Push Rod
(5) Distance Piece
(6) Nozzle
(7) Nozzle Nut

E. GOVERNOR SPRING AND STOP SOLENOID

a. Removal

1. Remove the idle adjusting bolt (1), stop solenoid fuel injection pump (2) and oil filler flange (3).
2. Remove the manual stop lever cover (4).
3. Open the governor lever cover.

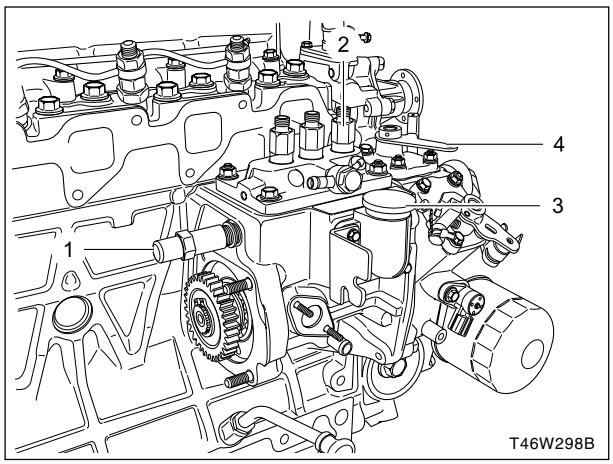

(1) Idle Adjusting Bolt
(2) Fuel Injection Pump
(3) Oil Filler Flange
(4) Manual Stop Lever Cover

4. Remove the governor spring using a hook after removing the throttle cover (1).

   Be careful not to pop out the governor spring.

   - The governor spring can also be removed by disengaging it from the fork lever and then removing it engaged with the throttle lever.

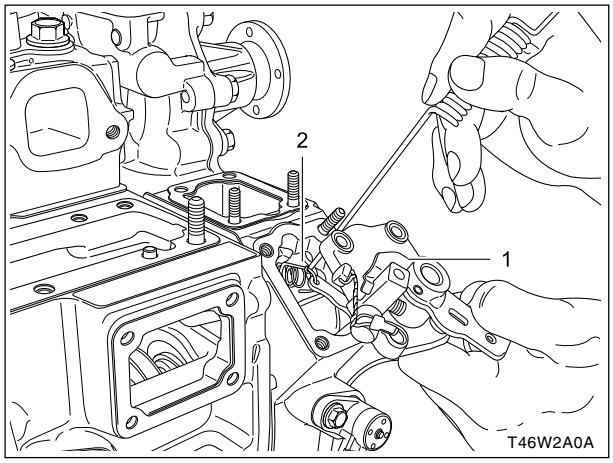

(1) Throttle Cover

b. Installation

1. When installing the governor spring, make sure that the governor spring 2 is installed on the inside of governor spring 1.

CAUTION

- ***Be careful of the direction of the governor spring 1. The longer side should face the governor fork.***
- ***If the governor spring is dropped during the installation, the crankcase should be disassembled again. Therefore, use a hook not to drop the governor spring.***

2. The governor spring can also be installed by installing one end to the throttle lever first and then the other end to the long hole of the governor fork.

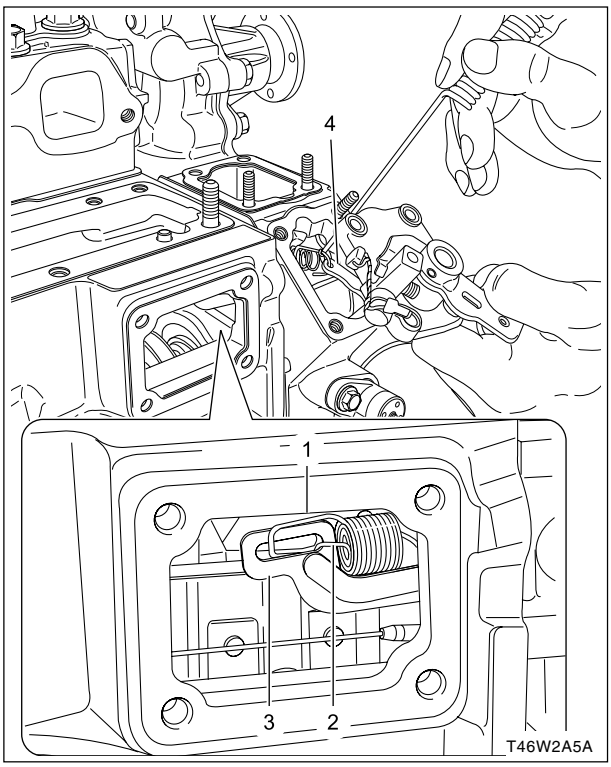

(1) Governor Spring 1
(2) Governor Spring 2
(3) Fork Lever 2

6.1.17 CRANKCASE

A. REMOVAL

1. Straighten the locking washer (1) and remove the crankshaft nut (2).
2. Remove the fan drive pulley (3).

Tightening torque	Crankshaft nut	137.3 ~ 156.9 Nm 14.0 ~ 16.0 kgf-m 101.3 ~ 115.7 lb-ft

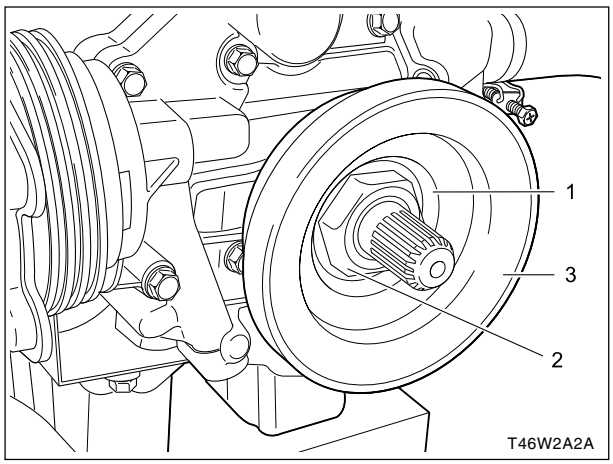

(1) Locking Washer (3) Fan Drive Pulley
(2) Crankshaft Nut

3. Unscrew the crankcase mounting bolts to remove the gear case.

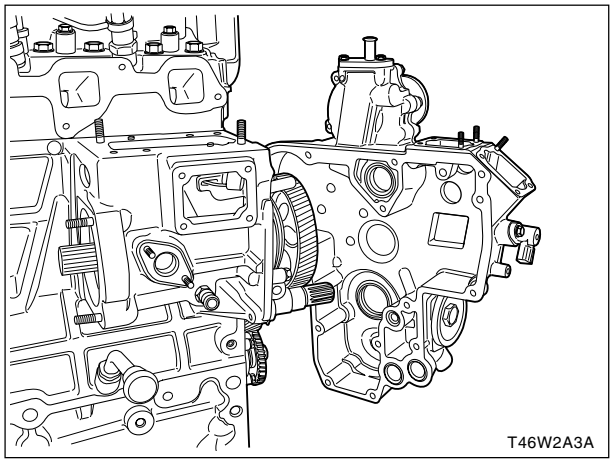

B. INSTALLATION

1. Apply the liquid gasket (Three bond 1215 or equivalent) to the both sides of the gearcase gasket.
2. Apply the grease to the crankshaft oil seal (1) lip on the gearcase and take care not to damage it when installing.
3. Apply the grease on the O-ring (2) and attach it to the gearcase to prevent it from coming off during reassembling.
4. Make sure that the gearcase mounting bolts are installed at correct locations.

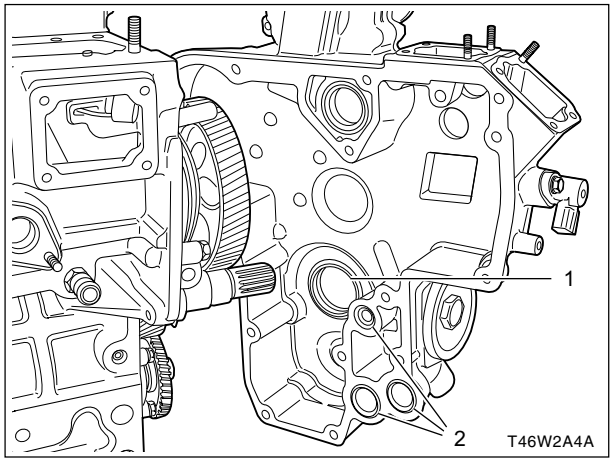

(1) Crankshaft Oil Seal (2) O-ring

IMPORTANT

- ***In general, the bolt should be screwed as 1.5 times as the diameter of the bolt in length.***

5. Install all bolts and increase the tightening torque gradually (in 2 to 3 steps).

Tightening torque	M8	23.5 ~ 27.4 Nm 2.4 ~ 2.8 kgf-m 17.3 ~ 20.2 lb-ft

6.1.18 IDLE GEAR AND CRANK GEAR

A. REMOVAL

1. Remove the crankshaft collar (6), O-ring (5), oil slinger (4) and oil pump drive gear 1 (3) in order.
2. Remove the idle gear (1).
3. Remove the crankshaft gear (2) with a puller set.

NOTE:

- *The oil pump drive gear (3) is only for the B series engine. It is not installed to the A series engine.*

  Instead, the crankshaft gear (2) of the A series engine is longer than that of the B series as much as the thickness of the oil pump drive gear (3).

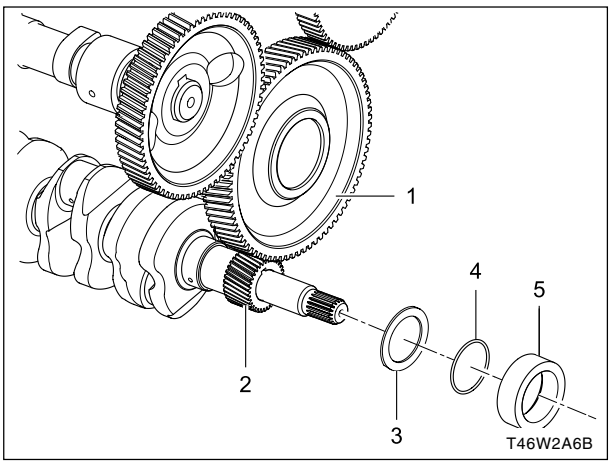

(1) Idle Gear
(2) Crankshaft Gear
(3) Oil Slinger
(4) O-ring
(5) Crankshaft Collar

B. INSTALLATION

1. If necessary, heat the crankshaft (2) gear up to approx. 80°C (176°F) and insert it to the crankshaft.
2. Apply the oil to the O-ring (5) on the left figure.
3. The tapered face of the crankshaft collar should be first to contact with the O-ring.
4. Install the idle gear while aligning the marks on the all gears as shown in the figure.

IMPORTANT

- ***Even the one misalignment of these marks on the gears can lead to fatal failure of the engine.***

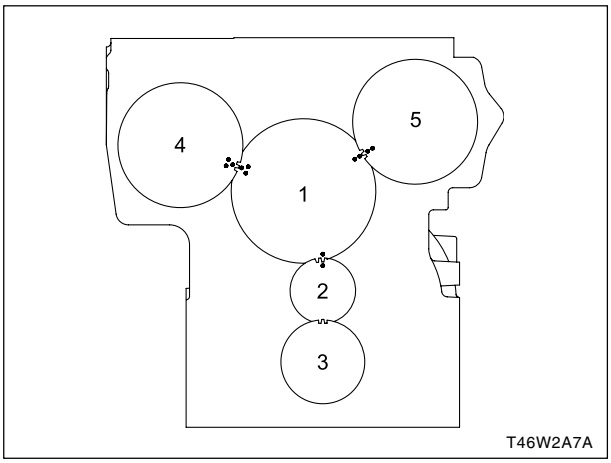

(1) Idle Gear
(2) Crankshaft Gear
(3) Oil Pump Gear
(4) Fuel Camshaft Gear
(5) Valve Camshaft Gear

6.1.19 VALVE CAMSHAFT

A. REMOVAL

1. Align the holes on the cam gear (2) with the bolt holes and unscrew the bolts through the service hole with a T handle wrench.
2. Remove the camshaft (1).
3. Remove the cam gear (2).

B. INSTALLATION

1. If necessary, heat the cam gear up to approx. 80°C (176°F) and insert it to the camshaft (1).

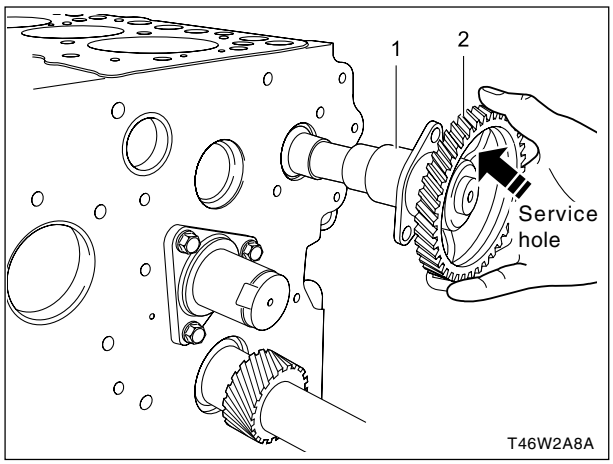

(1) Camshaft (2) Cam Gear

6.1.20 FUEL CAMSHAFT

A. REMOVAL

1. Remove the fuel camshaft stopper (1).

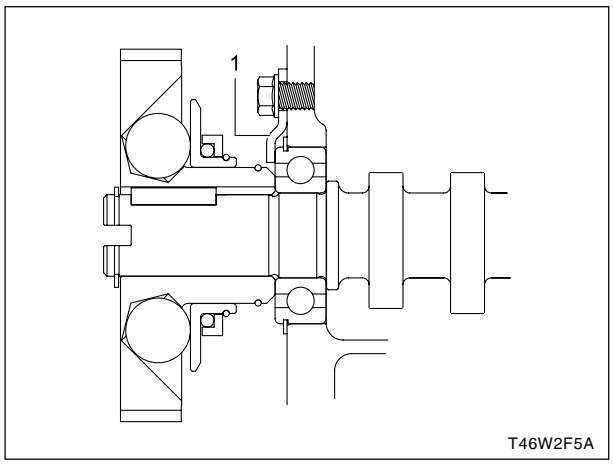

(1) Fuel Camshaft Stopper

2. Unscrew the fork lever holder screws and remove the fuel camshaft (4), fork lever holder (5), fork lever 1 (1) and fork lever 2 (2) at the same time.
3. Remove the fuel camshaft gear (3) from the fuel camshaft if necessary.

B. INSTALLATION

- If necessary, heat the fuel camshaft gear up to approx. 80°C (176°F) and insert it to the camshaft.

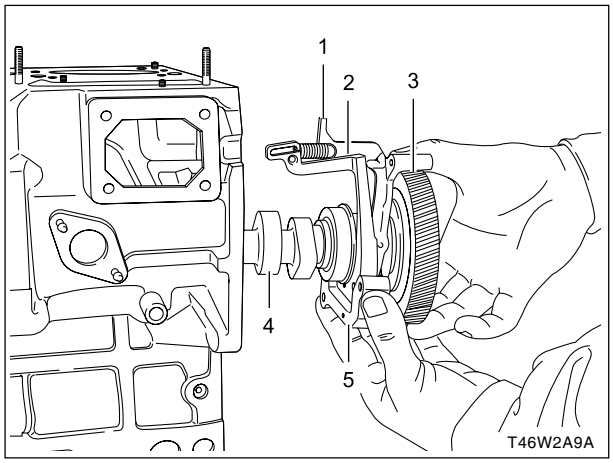

(1) Fork Lever 1 (4) Camshaft
(2) Fork Lever 2 (5) Fork Lever Holder
(3) Fuel Injection Pump Gear

6.1.21 CONNECTING ROD AND PISTON

A. OIL PAN AND OIL FILTER

1. Remove the oil pan.
2. Remove the oil strainer (1).

(When reassembling)

- Be sure to install the O-ring (2) between the oil strainer and the cylinder block.

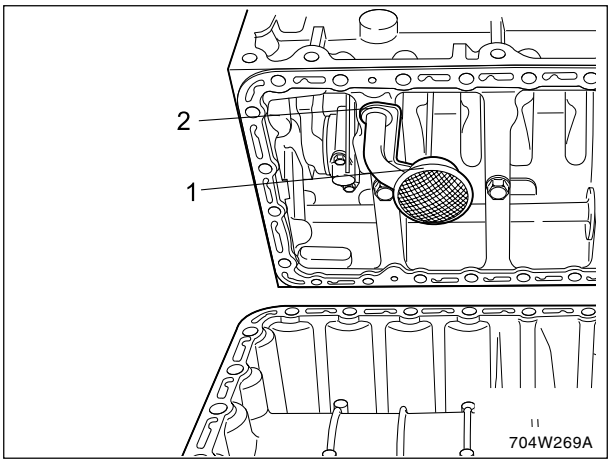

(1) Oil Strainer (2) O-ring

B. PISTON AND CONNECTING ROD

1. Remove the screws and the connecting rod cap.
2. Push out the rod and piston assembly.

(When reassembling)

- Apply oil to the crankpin bearing, cylinder wall and connecting rod cap screw.
- Insert the connecting rod and piston assembly with the mark on the rod facing the injection pump, using a piston ring compressor.

IMPORTANT

- ***Mark the cylinder number on the piston and connecting rod to prevent interchanging.***
- ***Carefully insert the piston and ring assembly in the cylinder. Be careful when compressing the rings not to damage the chrome-plate on the piston rings.***
- ***If the connecting rod cap screws can not be screwed to the end by hand, replace the screw.***

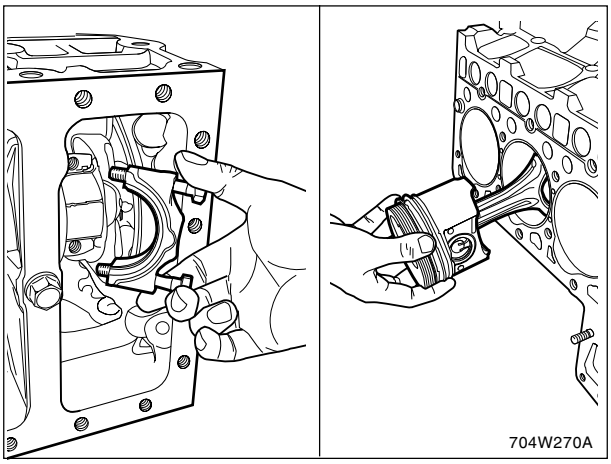

C. PISTON RING AND PISTON PIN

1. Remove the piston rings with a piston ring replacing tool.
2. Remove the piston pin.

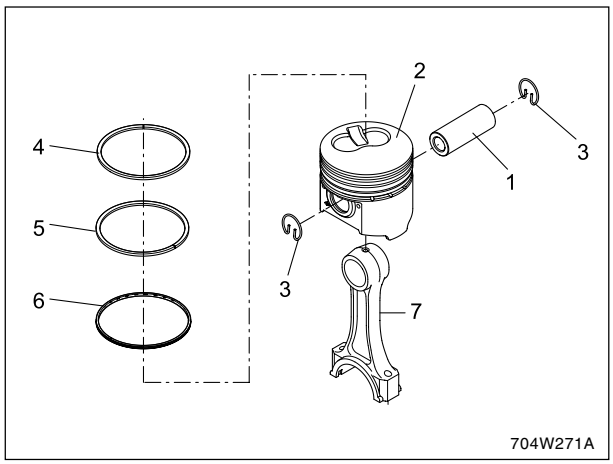

(1) Piston Pin
(2) Piston
(3) Piston Pin Snap Ring
(4) Top Ring
(5) Second Ring
(6) Oil Ring
(7) Connecting Rod

(When reassembling)

- Clean all the parts before assembling.
- Heat the piston in approx. 80°C (176°F) of oil for 10 ~ 15 minutes, when inserting the piston pin into the piston.
- Install the piston and connecting rod with the mark FW on the piston towards the flywheel and the mark on connecting rod towards the injection pump.
- Install the piston rings with their manufacture's mark to the top of piston.
- Install the expander in the oil ring with its gap opposite to the gap of oil ring.
- Install the top ring with its gap at 1.57 rad (90°) from the piston pin to the exhaust port.
- Install the second ring and the oil ring with their gap at every 2.09 rad (120°).

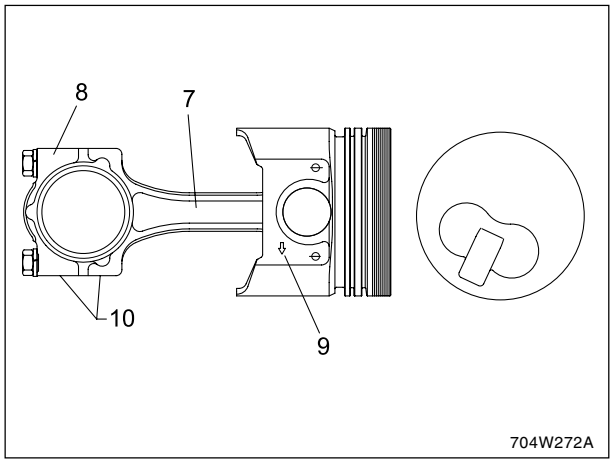

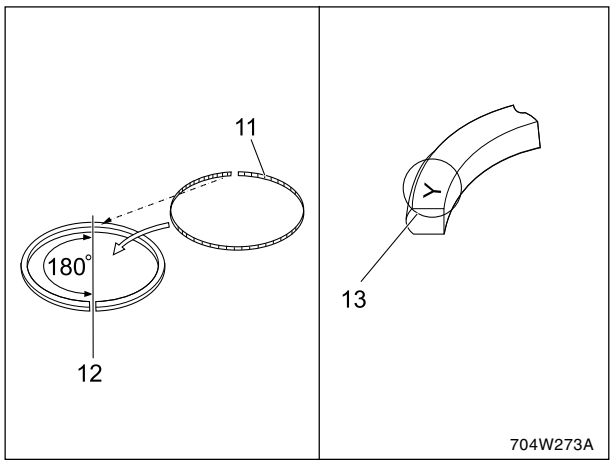

(7) Connecting Rod
(8) Connecting Rod Cap
(9) Casting Mark
(10) Marks
(11) Expander Joint
(12) Oil Ring Gap
(13) Manufacturer's Mark

6.1.22 CRANKSHAFT

A. FLYWHEEL

1. Install the stopper to the flywheel and loosen the screw.
2. Remove the flywheel stopper and the flywheel.

(When reassembling)

- Clean the end of the crankshaft and the mating surface of the flywheel.
- Apply oil to flywheel screws.
- Fit the flywheel hole to crankshaft hole and tighten the flywheel bolts to specified torque.

NOTE:

- *Screw longer screws to the flywheel to carry it if needed.*

Tightening torque	Flywheel screw	98.1 ~ 107.9 Nm 10.0 ~ 11.0 kgf-m 72.3 ~ 79.6 lb-ft

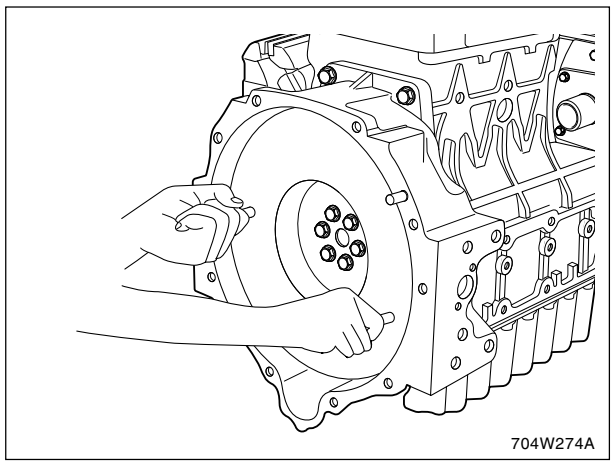

B. BEARING CASE COVER

Loosen the screw first inside and next outside, and lift the cover (1) by screwing the two screws gradually and evenly, referring to the photo.

(When reassembling)

- Apply grease to the oil seal lip. Take care that the lip seal is is not rolled while installing.

Tightening torque	Bearing case cover screw	23.5 ~ 27.5 Nm 2.4 ~ 2.8 kgf-m 17.4 ~ 20.3 lb-ft

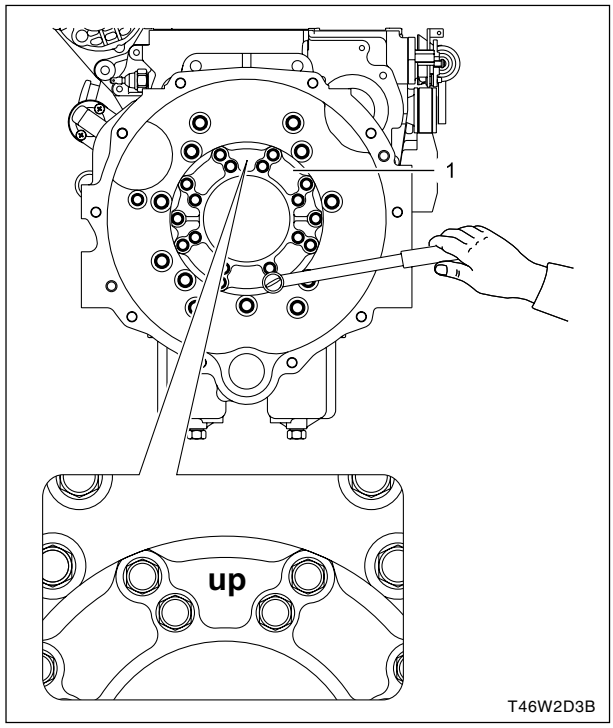

C. CRANKSHAFT

1. Remove the bearing case screw 2.
2. Pull out the crankshaft, taking care not to damage the crankshaft bearing 1.

(When reassembling)

- Apply oil to the bearing case screw 2.
- Clean the oil passage of the crankshaft with compressed air.

Bearing case screw 2	3A139 3A150 3A165	68.7 ~ 73.6 Nm 7.0 ~ 7.5 kgf-m 50.6 ~ 54.2 lb-ft
	TD1300	63.8 ~ 68.7 Nm 6.5 ~ 7.0 kgf-m 47.0 ~ 50.6 lb-ft

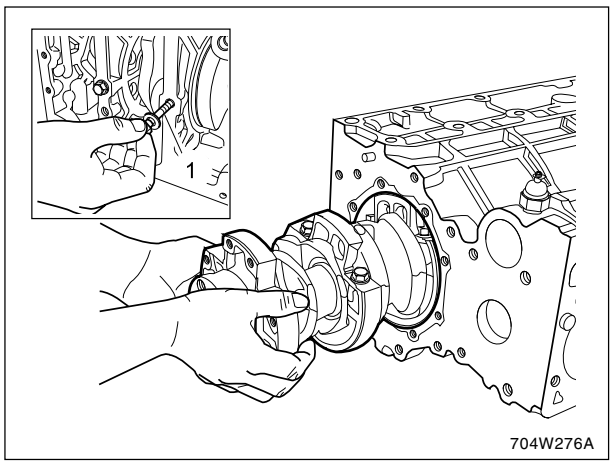

(1) Bearing Case Scraw 2

D. MAIN BEARING CASE

1. Remove the bearing case screws 1 (4) and remove the main bearing case 1, 2, 3 (1, 2, 3).
2. Remove the thrust bearing from the flywheel end bearing case.

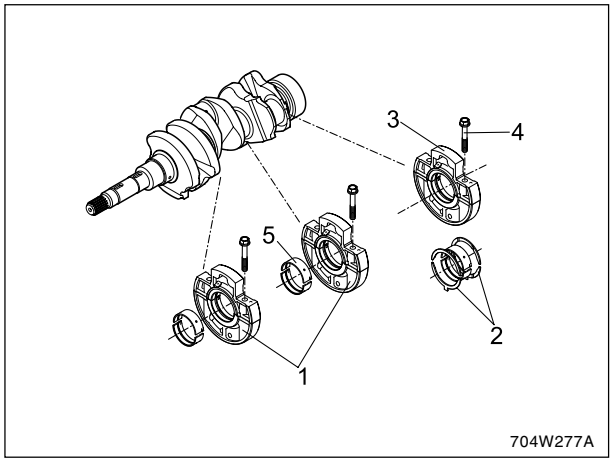

(1,2,3) Main Bearing Case Assembly 1, 2, 3
(4) Bearing Case Screw 1
(5) Thrust Bearings

IMPORTANT

- ***Mark the location line to the bearing case, to prevent interchanging.***

(When reassembling)

- Clean the parts and the oil passage of the bearing case.
- Apply oil to the journal, bearing inserts and the bearing case screws.
- Place the thrust bearings on the bearing case with their oil groove outside.
- Install the main bearing case with the mark “FLY WHEEL” toward the flywheel.

Bearing case screw 1	3A139 3A150 3A165	46.1 ~ 51.0 Nm 4.7 ~ 5.2 kgf-m 34.0 ~ 37.6 lb-ft
	TD1300	29.4 ~ 34.3 Nm 3.0 ~ 3.5 kgf-m 21.7 ~ 25.3 lb-ft

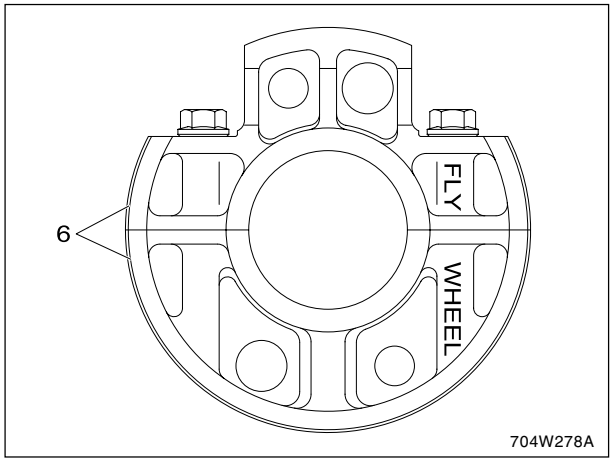

(6) Bearing Case

6.2 INSPECTION FOR OVERHAUL

6.2.1 CYLINDER HEAD AND VALVE

A. CYLINDER HEAD SURFACE FLATNESS

1. Thoroughly clean the cylinder head surface.
2. Place a straight edge on the cylinder head and measure the clearance with a feeler gage as shown in the figure.
3. If the measurement exceeds the allowable limit, replace the cylinder head.

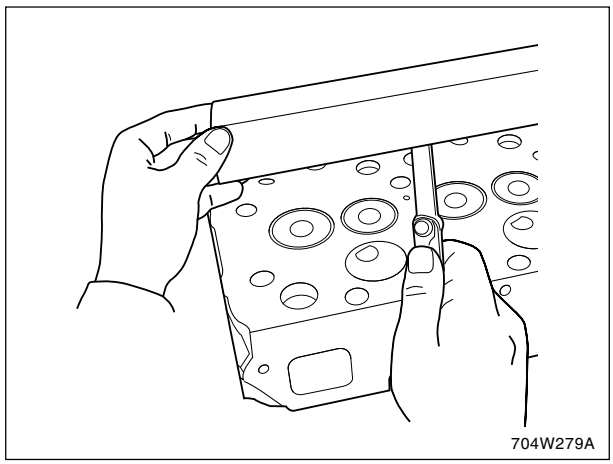

IMPORTANT

- ***Do not place the straight edge on the combustion chamber.***

Flatness	Allowable limit	0.05 mm 0.002 in.

NOTE:

- *When installing the main bearing case cover, the "UP" mark on it should be at the highest position so that its holes are aligned with the holes of the cylinder block.*

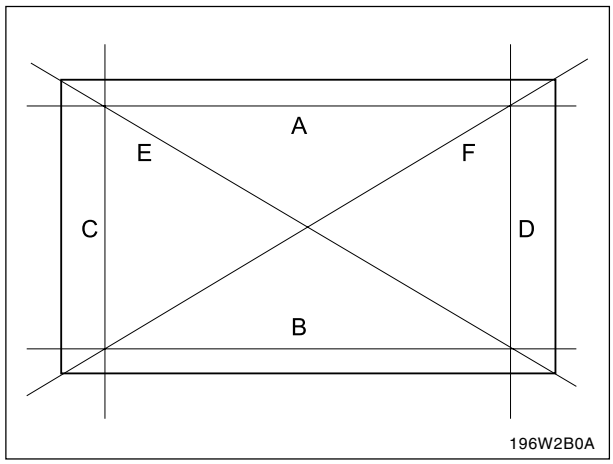

B. CYLINDER HEAD SURFACE FLAW

1. Prepare an air spray red check.
2. Clean the cylinder head surface with the detergent (B).
3. Spray the cylinder head surface with the red permeative liquid (A).
4. Wash away the red permeative liquid on the cylinder head surface with the detergent (B) after ten minutes.
5. Spray the cylinder head surface with the white developer (C).
6. If any flaw is found such as a red mark, replace the cylinder head.

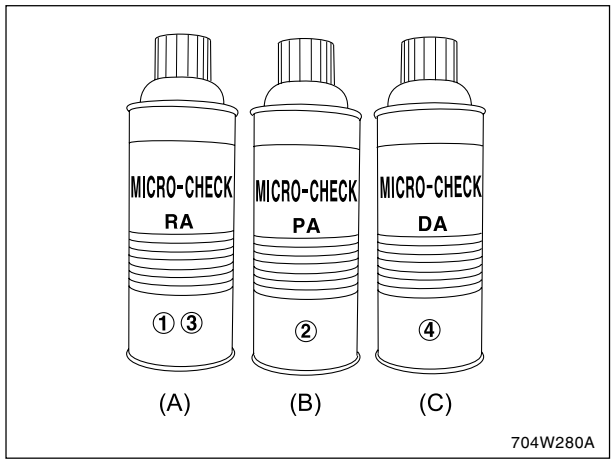

(A) Red Permeative Liquid
(B) Detergent
(C) White Developer

C. VALVE STEM CLEARANCE

1. Remove the carbon from the valve guide.
2. Measure the valve stem O.D. with an outside micrometer.
3. Measure the valve guide I.D. of cylinder head, and calculate the clearance.
4. If the measurement exceeds the allowable limit, replace the valve guide of the valve.

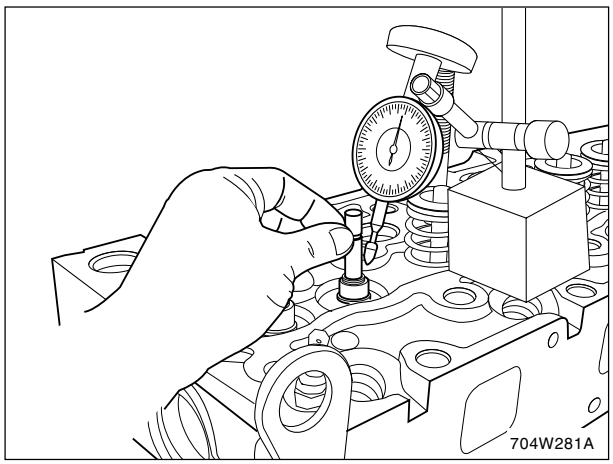

Valve stem clearance	Factory spec.	3A139 3A150 3A165	0.040 ~ 0.070 mm 0.00157 ~ 0.00276 in.
		TD1300	0.025 ~ 0.055 mm 0.00098 ~ 0.00216 in.
	Allowable limit		0.1 mm 0.004 in.
Valve guide bore I.D.	Factory spec.	3A139 3A150 3A165	8.015 ~ 8.030 mm 0.31555 ~ 0.31614 in.
		TD1300	8.0 ~ 8.015 mm 0.31496 ~ 0.31555 in.
Valve stem O.D.	Factory spec.		7.960 ~ 7.975 mm 0.31339 ~ 0.31398 in.

D. VALVE RECESSING

1. Clean the cylinder head, the valve face and the seat.
2. Insert the valve in the guide.
3. Measure the valve recessing with a depth gauge.
4. If the recessing exceeds the allowable limit, replace the valve and check the valve seating.

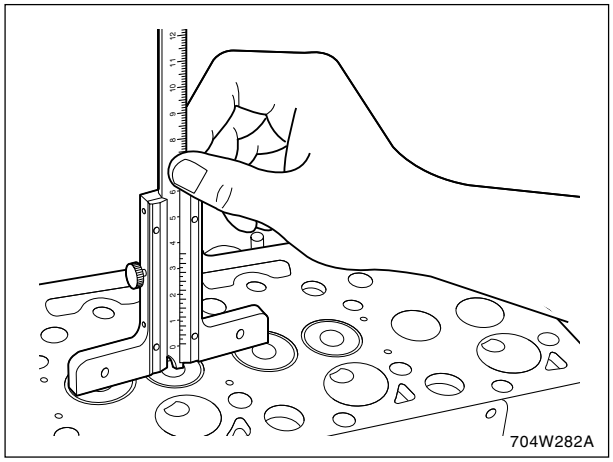

Valve recessing	Factory spec.	3A139 3A150 3A165	0.2 ~ 0.5 mm 0.0079~ 0.0197 in.
		TD1300	1.1 ~ 1.3 mm 0.0433 ~ 0.0512 in.
	Allowable limit	3A139 3A150 3A165	0.8 mm 0.0315 in.
		TD1300	1.6 mm 0.0630 in.

E. VALVE SEAT

1. Coat the valve face lightly with red lead and put the valve on its seat to check the contact.
2. If the valve does not seat all the way around the valve seat or the valve contact is less than 70%, correct the valve seating as follows.
3. Apply compound on the valve face evenly.
4. Put the valve on its seat hold it with the valve flapper.
5. Turn and lap the valve back and forth on the valve seat to lap.
6. Remove the compound and clean the valve and the seat.
7. Apply oil on the valve face and finish to complete fitting.
8. Repeat lapping until the valve seats correctly.

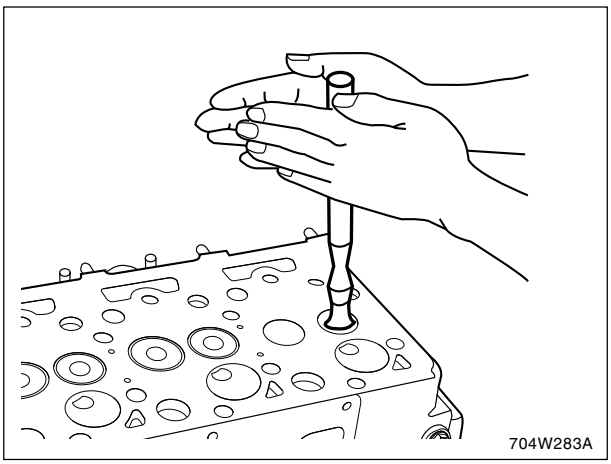

6.2.2 VALVE SPRING

A. VALVE SPRING

1. Measure the free length of the spring with venire calipers.
2. Place the spring on a spring compression tester and compress to the specified length, and get the tension.
3. If the measurement is less than the allowable limit, replace the valve spring.

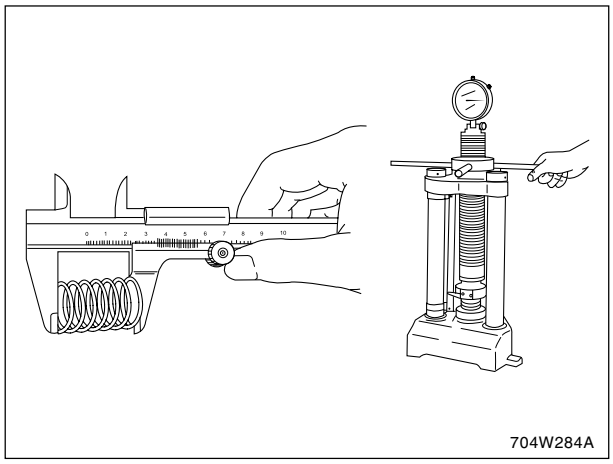

Tension	Factory spec.	17.7 N / 35.15 mm 12.0 kgf / 35.15 mm 26.5 lbs / 1.3839 in.
	Allowable limit	100 N / 35.15 mm 10.2 kgf / 35.15 mm 22.5 lbs / 1.3839 in.
Free length	Factory spec.	41.7 ~ 42.2 mm 1.6417 ~ 1.6614 in.
	Allowable limit	41.2 mm 1.622 in.

B. VALVE SPRING SQUARENESS (TILT)

1. Place the spring on the surface plate and a square at its side.
2. Measure the maximum distance A (See figure), rotating spring.
3. If the measurement exceeds the allowable limit replace.

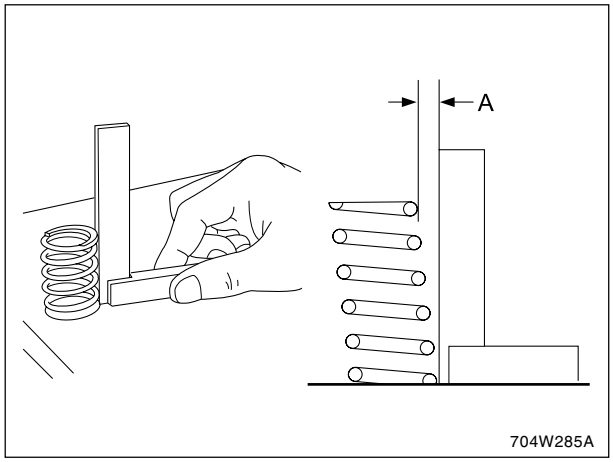

Valve spring square ness	Allowable limit	1.0 mm 0.039 in.

6.2.3 CHECKING OIL CLEARANCE BETWEEN ROCKER ARM SHAFT AND BUSHING

A. ROCKER ARM BUSHING AND SHAFT CLEARANCE

1. Measure the rocker arm I.D. with an inside micrometer.
2. Measure the rocker arm shaft O.D. with an outside micrometer.
3. If the clearance exceeds the allowable limit, replace the rocker arm.
4. If the clearance still exceeds the allowable limit after replacing the rocker arm replace the rocker arm shaft.

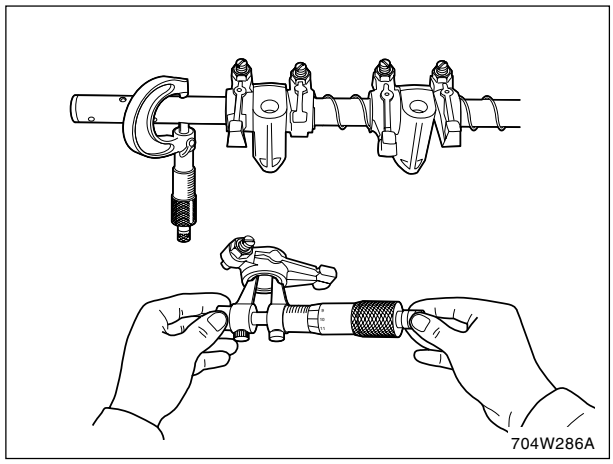

Clearance	Factory spec.	3A139 3A150 3A165	0.020 ~ 0.070 mm 0.00079 ~ 0.00276 in.
		TD1300	0.014 ~ 0.050 mm 0.00055 ~ 0.00197 in.
	Allowable limit		0.15 mm 0.0059 in.
Rocker arm shaft O.D.	Factory spec.	3A139 3A150 3A165	18.955 ~ 18.980 mm 0.74626 ~ 0.74724 in.
		TD1300	13.973 ~ 13.984 mm 0.5501 ~ 0.5506 in.
Rocker arm I.D.	Factory spec.	3A139 3A150 3A165	19.000 ~ 19.025 mm 0.74803 ~ 0.74902 in.
		TD1300	13.998 ~ 14.023 mm 0.5513 ~ 0.5529 in.

6.2.4 TIMING GEARS AND CAMSHAFTS

A. TIMING GEAR BACKLASH

1. Set a dial indicator (lever type) with its tip on the gear tooth.
2. Move the gear to measure the backlash, holding its mating gear.
3. If the backlash exceeds the allowable limit, check the oil clearance of the shafts and the gear.
4. If the oil clearance is improper, replace the gear.

Clearance	Factory spec.	0.04 ~ 0.11 mm 0.0016 ~ 0.0043 in.
	Allowable limit	0.15 mm 0.0059 in.

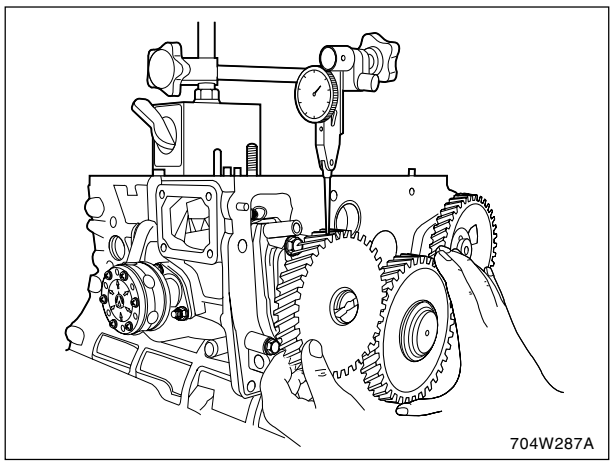

B. IDLE GEAR SIDE CLEARANCE

1. Pull the idle gear collar 2 (1) and push the idle gear (2) to each end.
2. Measure the clearance A between the idle gear and the idle gear collar 2 with a feeler gauge.
3. If the clearance exceeds the allowable limit, replace the idle gear collar 1 (3).

Side clearance	Factory spec.	0.20 ~ 0.51 mm 0.0079 ~ 0.0201 in.
	Allowable limit	0.9 mm 0.035 in.

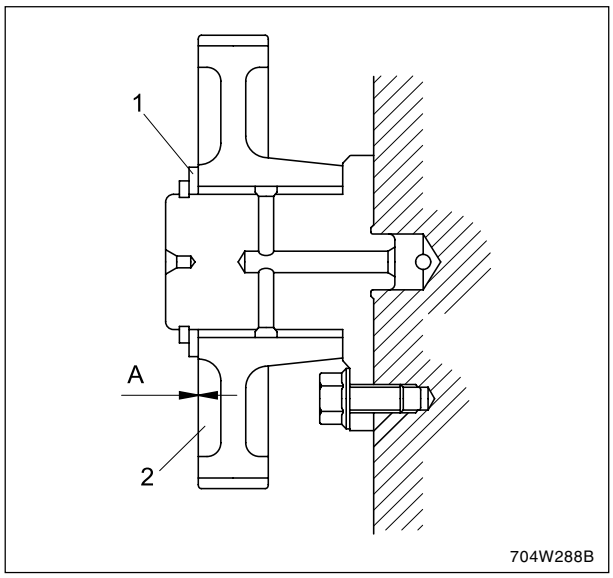

(1) Idle Gear Collar 2 (2) Idle Gear

C. CAM GEAR SIDE CLEARANCE

1. Pull the cam gear (2) with the camshaft (1) to its end.
2. Measure the clearance A between the cam gear (2) and the camshaft stopper (3).
3. If the clearance exceeds the allowable limit, replace the camshaft stopper (3).

Side clearance	Factory spec.	0.07 ~ 0.22 mm 0.0028 ~ 0.0087 in.
	Allowable limit	0.3 mm 0.0118 in.

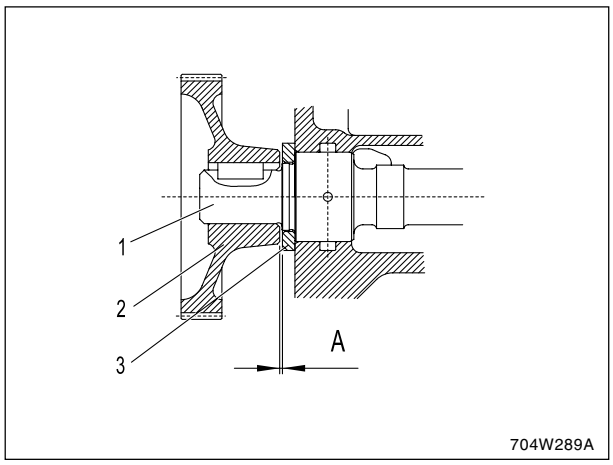

(1) Camshaft (3) Camshaft Stopper
(2) Cam Gear

D. INJECTION PUMP GEAR SIDE CLEARANCE

1. Pull the fuel camshaft and pull the injection pump gear (1) to each end.
2. Measure the clearance A between the injection pump gear (1) and the snap ring (2) on the fuel camshaft.
3. If the clearance exceeds the allowable limit, check the gear, the bearing and the key.

Side clearance	Factory spec.	0.15 ~ 0.57 mm 0.0059 ~ 0.0224 in.
	Allowable limit	0.9 mm 0.035 in.

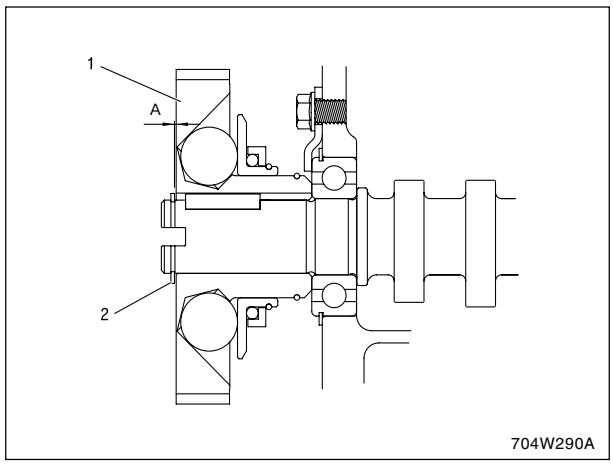

(1) Injection Pump Gear (2) Snap Ring

E. IDLE GEAR OIL CLEARANCE

1. Measure the idle gear shaft O.D. with an outside micrometer.
2. Measure the idle gear bushings I.D. with an inside micrometer.
3. If the clearance exceeds the allowable limit, replace the bushing.

Oil clearance	Factory spec.	3A139 3A150 3A165	0.025 ~ 0.066 mm 0.00098 ~ 0.00260 in.
		TD1300	0.02 ~ 0.054 mm 0.00078 ~ 0.00212 in.
	Allowable limit		0.1 mm 0.0039 in.
Shaft O.D.	Factory spec.	3A139 3A150 3A165	37.959 ~ 37.975 mm 1.49445 ~ 1.49508 in.
		TD1300	27.967 ~ 27.980 mm 1.10106 ~ 1.10157 in.
Bushing I.D.	Factory spec.	3A139 3A150 3A165	38.000 ~ 38.025 mm 1.49606 ~ 1.49705 in.
		TD1300	28.0 ~ 28.021 mm 1.10236 ~ 1.10319 in.

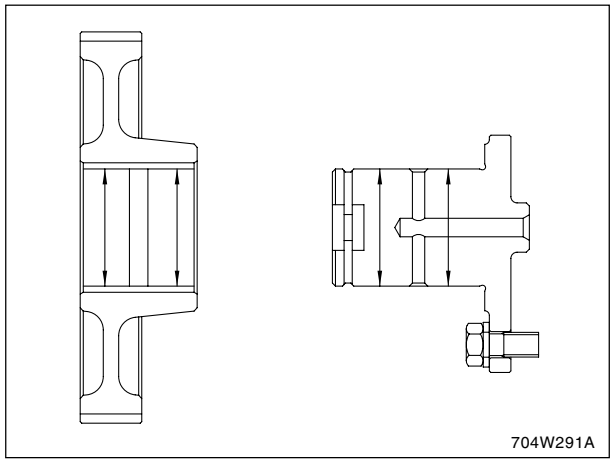

F. REPLACING IDLE GEAR BUSHINGS

1. Press out the bushings using an idle gear bushing replacing tool.
2. Clean the bushings and the bore, and apply oil to them.
3. Press in the bushing using the replacing tool.

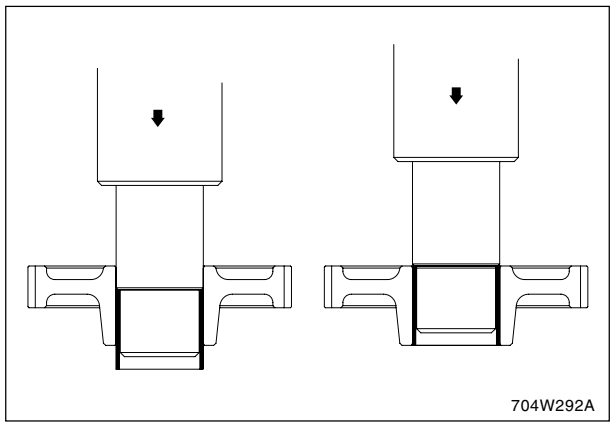

G. CAMSHAFT OIL CLEARANCE

1. Measure the I.D. of the camshaft bore on the crankcase with an inside micrometer.
2. Measure the O.D. of the camshaft journal with an outside micrometer.
3. If the clearance exceeds the allowable limit, replace the shaft.

Oil clearance	Factory spec.	0.050 ~ 0.091mm 0.00197 ~ 0.00358 in.
	Allowable limit	0.15 mm 0.0059 in.
Journal O.D.	Factory spec.	39.934 ~ 39.950 mm 1.57221 ~ 1.57284 in.
Bore I.D.	Factory spec.	40.000 ~ 40.025 mm 1.57480 ~ 1.57579 in.

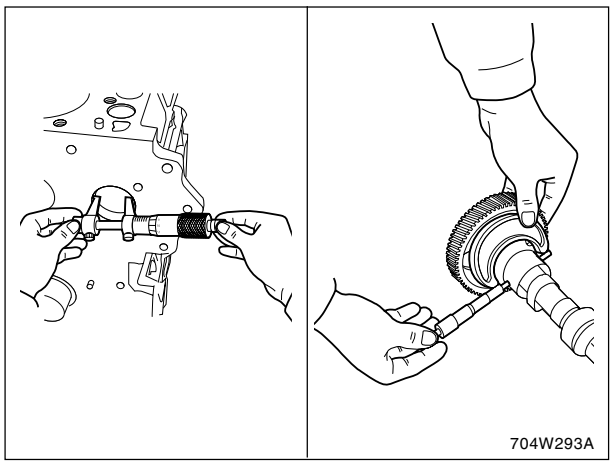

H. CAMSHAFT ALIGNMENT

1. Support the camshaft with V blocks on the surface plate at both end journals and set a dial indicator with its tip on the intermediate journal.
2. Rotate the camshaft in the V block and get the eccentricity (half of the measurement).
3. If the eccentricity exceeds the allowable limit, replace the camshaft.

Eccentricity	Allowable limit	0.05 mm 0.002 in.

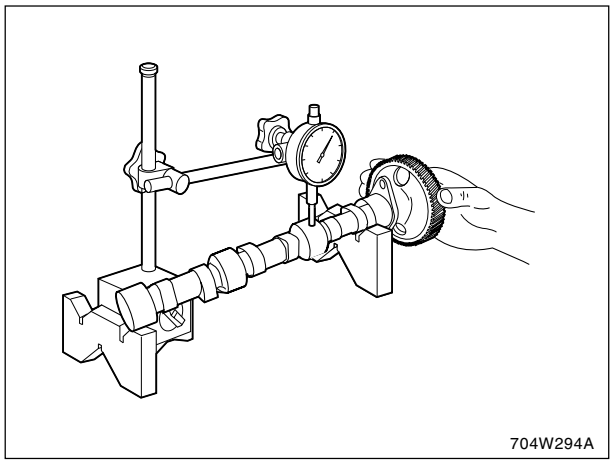

I. CAM HEIGHT

1. Measure the height of the camshaft lobes at their largest. O.D. with an outside micrometer.
2. If the measurement is less than the allowable limit, replace the camshaft.

Cam height	3A139 3A150 3A165	(IN.)	Specification	33.59 mm 1.3224 in.
			Allowable limit	33.54 mm 1.3205 in.
		(EX.)	Specification	33.69 mm 1.3264 in.
			Allowable limit	33.64 mm 1.3244 in.
	TD1300	(IN.)	Specification	33.5 ~ 33.6 mm 1.31889 ~ 1.32283 in.
			Allowable limit	33.45 mm 1.3169 in.
		(EX.)	Specification	33.5 ~ 33.6 mm 1.31889 ~ 1.32283 in.
			Allowable limit	33.45 mm 1.3169 in.

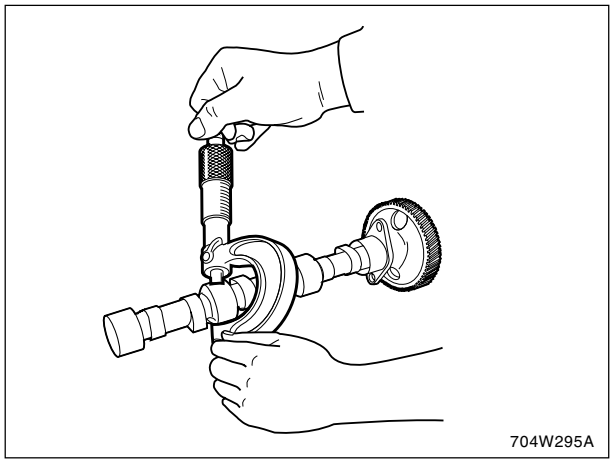

6.2.5 CONNECTING ROD AND PISTON

A. PISTON PIN BORE

1. Measure the I.D. of piston pin bore in piston (lengthwise and widthwise of the piston) with a cylinder gauge.
2. If the measurement exceeds the allowable limit, replace the piston.

Piston pin bore I.D.	3A139 3A150 3A165	Factory spec.	25.000 ~ 25.006 mm 0.9843 ~ 0.9845 in.
		Allowable limit	25.03 mm 0.9854 in.
	TD1300	Factory spec.	23.0 ~ 23.013 mm 0.9055 ~ 0.9060 in.
		Allowable limit	23.053 mm 0.9076 in.

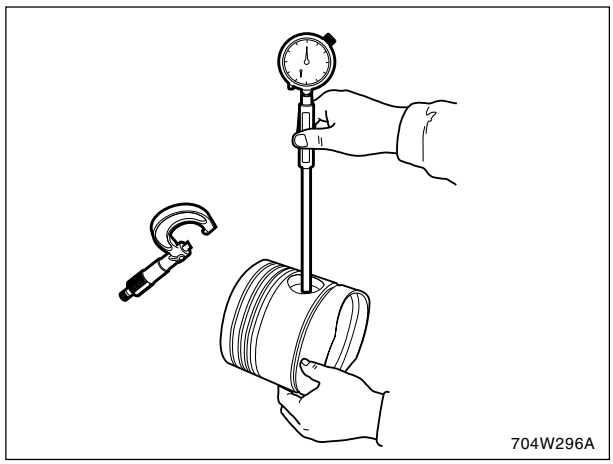

B. PISTON PIN AND BRUSHING CLEARANCE

1. Measure the piston pin O.D. with an outside micrometer.
2. Measure the piston pin busing I.D. with an inside micrometer.
3. If the clearance exceeds the allowable limit with new bushing, replace the piston pin.

Piston pin and bushing clearance	Factory spec.		0.014 ~ 0.038 mm 0.00055 ~ 0.00150 in.
	Allowable limit		0.15 mm 0.0059 in.
Piston pin O.D.	Factory spec.	3A139 3A150 3A165	25.002 ~ 25.011 mm 0.98433 ~ 0.98469 in.
		TD1300	23.002 ~ 23.011 mm 0.90559 ~ 0.90594 in.
Bushing I.D.	Factory spec.	3A139 3A150 3A165	25.025 ~ 25.040 mm 0.98524 ~ 0.98583 in.
		TD1300	23.025 ~ 23.040 mm 0.90650 ~ 0.90709 in.

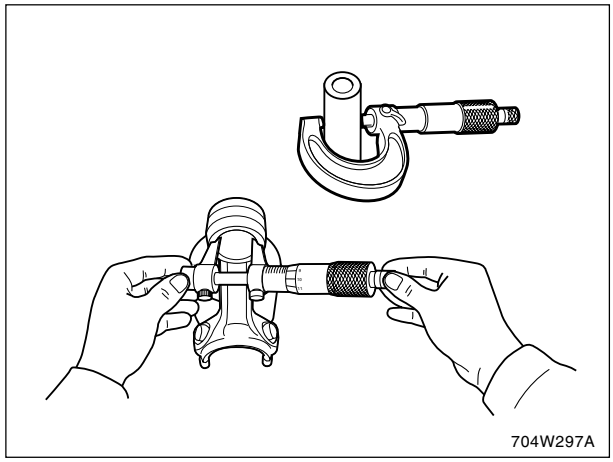

C. REPLACING PISTON PIN BUSHING

1. Press out the bushing, using a piston pin bushing replacing tool.
2. Clean the new bushing and the bore and apply oil to them.
3. Press in the bushing, using the replacing tool.

IMPORTANT

- ***Align the oil holes of the connecting rod and the bushing.***

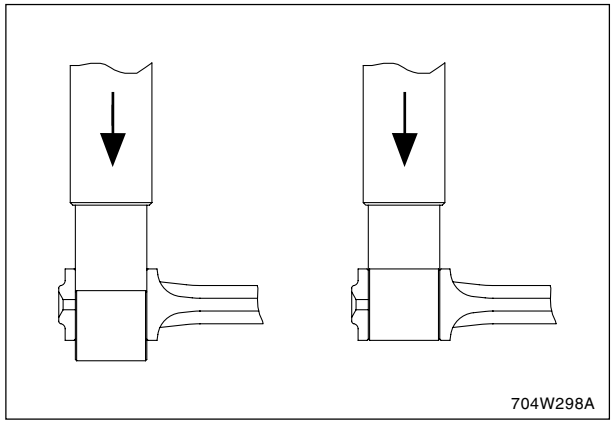

D. PISTON RING END GAP

1. Push down the ring into the cylinder to the lower limit of ring travel in the assembled engine with a piston.
2. Measure the ring gap with a feeler gauge.
3. If the gap exceed the allowable limit, replace the piston ring.

Piston ring end gap	2nd ring	Factory spec.	3A139 3A150 3A165	0.55 ~ 0.70 mm 0.0217 ~ 0.0276 in.
			TD1300	0.25 ~ 0.40 mm 0.0098 ~ 0.05575 in.
		Allowable limit		1.25 mm 0.0492 in.
	Top ring	Factory spec.		0.25 ~ 0.40 mm 0.0098 ~ 0.0157 in.
	Oil ring	Factory spec.	3A139 3A165	0.25 ~ 0.40 mm 0.0098 ~ 0.0157 in.
			3A150	0.20 ~ 0.40 mm 0.0078 ~ 0.0157 in.
	Top ring, oil ring	Allowable limit		1.25 mm 0.0492 in.

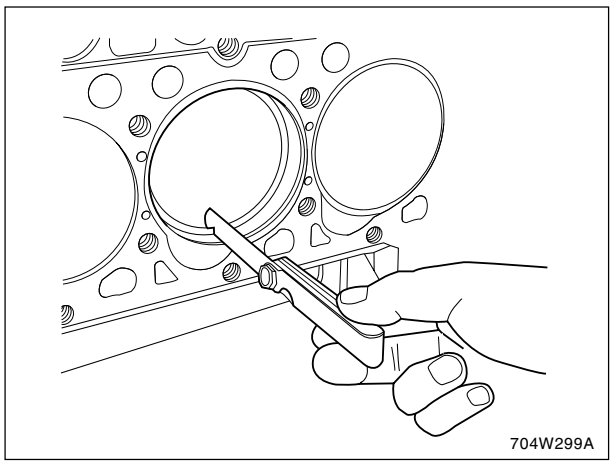

E. PISTON RING CLEARANCE

1. Clean the ring and the ring grooves, and install each ring in its groove.
2. Measure the clearance between the ring and the groove with a feeler gauge.
3. If the clearance exceeds the allowable limit, replace the piston ring.
4. If the clearance still exceeds the allowable limit with the new ring, replace the piston.

Piston ring clearance	2nd ring	Factory spec.	3A139 3A150 3A165	0.04 ~ 0.08 mm 0.00157 ~ 0.00315 in.
			TD1300	0.065 ~ 0.10 mm 0.00256 ~ 0.00394 in.
		Allowable limit		0.15 mm 0.0059 in.
	Oil ring	Factory spec.	3A139 3A150 3A165	0.02 ~ 0.06 mm 0.00079 ~ 0.00236 in.
			TD1300	0.02 ~ 0.06 mm 0.0008 ~ 0.00236 in.
		Allowable limit		0.15 mm 0.0059 in.

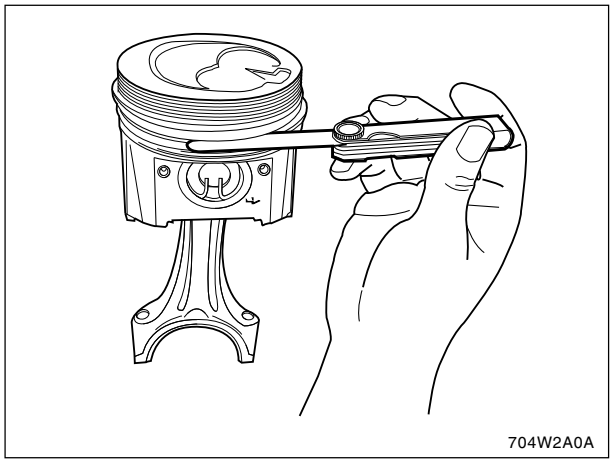

F. CONNECTING ROD ALIGNMENT

1. Remove the connecting rod bearing and install the bearing cap.
2. Install the piston pin in the connecting rod.
3. Install the connecting rod on the connecting rod alignment tool.
4. Put a gauge over the piston pin and move it against the face plate.
5. If the gauge does not fit squarely against the face plate, measure the space between the pin of the gauge and the face plate.
6. If the measurement exceeds the allowable limit, replace the connecting rod.

Space between gauge pin and face plate	Allowable limit	0.05 mm (0.0020 in.) at 100 mm (3.94 in.) of gauge pin span

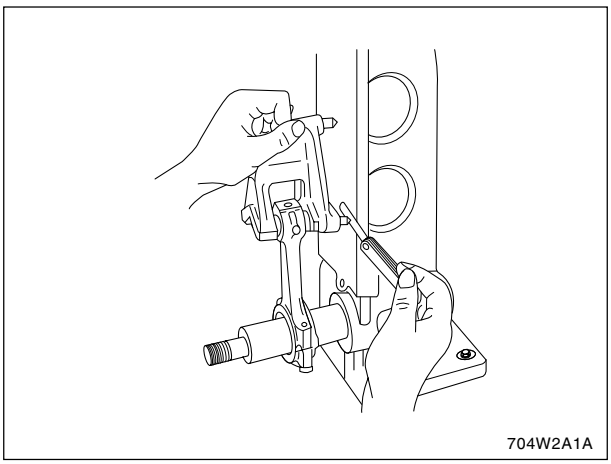

6.2.6 CRANKSHAFT

A. FLYWHEEL DEFLECTION AND CRANKSHAFT END PLAY

1. Set a dial indicator with its tip on the rear friction face of the flywheel near the edge.
2. Turn the flywheel and measure the deflection or the uneven wear.
3. If the measurement exceeds the allowable limit, remove the flywheel and check the mating faces of the crankshaft and flywheel.
4. If scored of worn excessively, regrind or replace the flywheel.
5. Move the crankshaft with flywheel back and forth to each end and measure the end play.
6. If the play exceeds the allowable limit, replace the side bearing.

Deflection	Allowable limit	0.05 mm 0.0020 in.
End play	Factory spec.	0.15 ~ 0.31 mm 0.0059 ~ 0.0122 in.
	Allowable limit	0.5 mm 0.020 in.

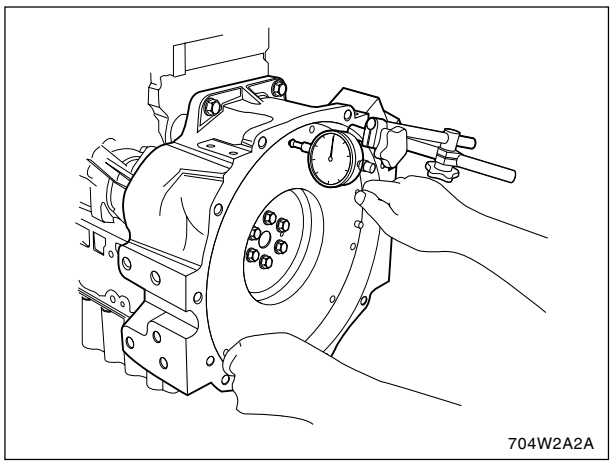
704W2A2A

B. CRANKSHAFT ALIGNMENT

1. Support the crankshaft with V blocks on the surface plate at its front and rear journals and set a dial indicator with its tip on the intermediate journal.
2. Rotate the crankshaft in the V blocks and get the misalignment (half of the measurement).
3. If the misalignment exceeds the allowable limit, replace the crankshaft.

Misalignment	Allowable limit	0.08 mm 0.0031 in.

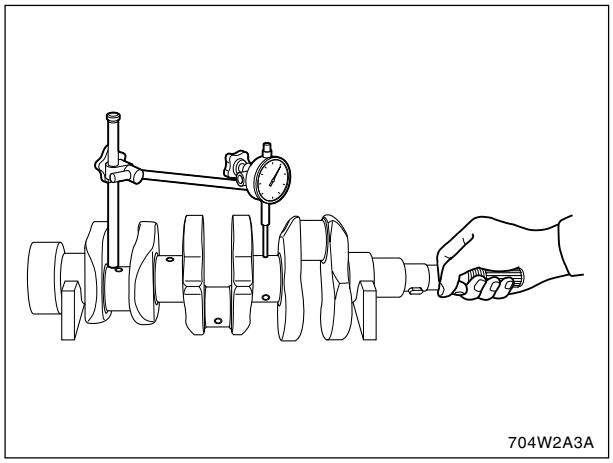
704W2A3A

C. CRANKSHAFT JOURNAL AND BEARING 1 OIL CLEARANCE

1. Measure the I.D. of the crankshaft bearing 1 with an inside micrometer.
2. Measure the O.D. of the crankshaft journal with an outside micrometer.
3. If the clearance exceeds the allowable limit, replace the bearing referring to Replacing Crankshaft Bearing 1.

Oil clearance	Factory spec.	0.040 ~ 0.118 mm 0.00157 ~ 0.00465 in.
	Allowable limit	0.20 mm 0.0079 in.
Journal O.D.	Allowable limit	51.921 ~ 51.940 mm 2.04414 ~ 2.04488 in.
Bearing 1 I.D.	Allowable limit	51.980 ~ 52.039 mm 2.04646 ~ 20.4878 in.

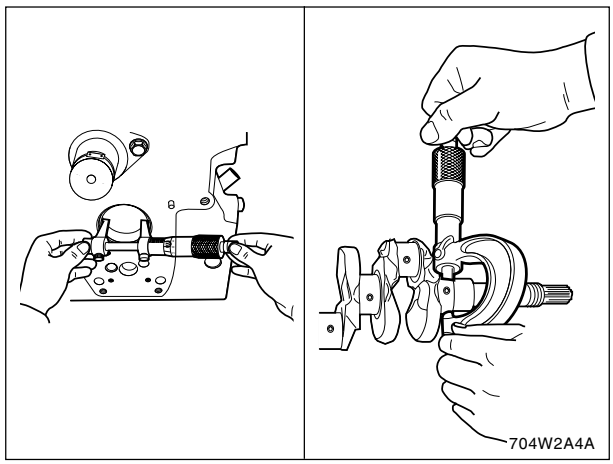

D. REPLACING CRANKSHAFT BEARING 1

1. Press out the crankshaft bearing 1 using replacing tool.
2. Clean a new crankshaft bearing 1 and bore, and apply engine oil to them.
3. Press fit a new bearing 1 using a inserting tool, taking due care to see that the seam of bearing 1 faces the exhaust manifold side.

Allowable limit	4.5 mm (0.177 in.)

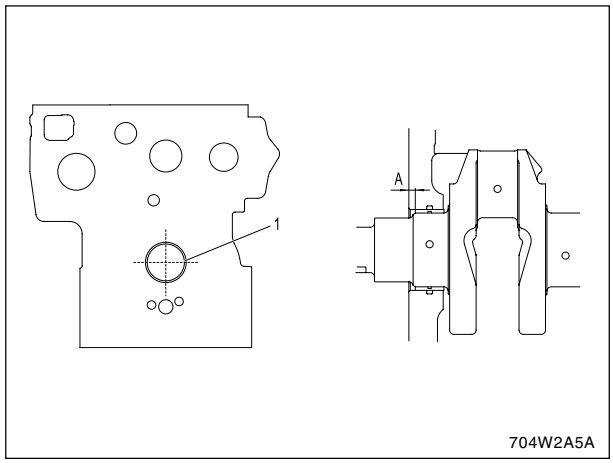

(1) Seam

E. CRANKSHAFT JOURNAL AND BEARING 2 OIL CLEARANCE

1. Put plasticgauge lengthwise in the center of the journal.
2. Install the bearing cap and tighten the screw to the specified torque once, and remove the cap again.
3. Measure the amount of the flattening with the scale and get the oil clearance.
4. If the clearance exceeds the allowable limit, replace replace the bearing.

Oil clearance	Factory spec.	0.040 ~ 0.104 mm 0.00157 ~ 0.00409 in.
	Allowable limit	0.20 mm 0.0079 in.
Journal O.D.	Allowable limit	51.921 ~ 51.940 mm 2.04414 ~ 2.04488 in.
Bearing 2 I.D.	Factory spec	51.980 ~ 52.025 mm 2.04646 ~ 2.04823 in.

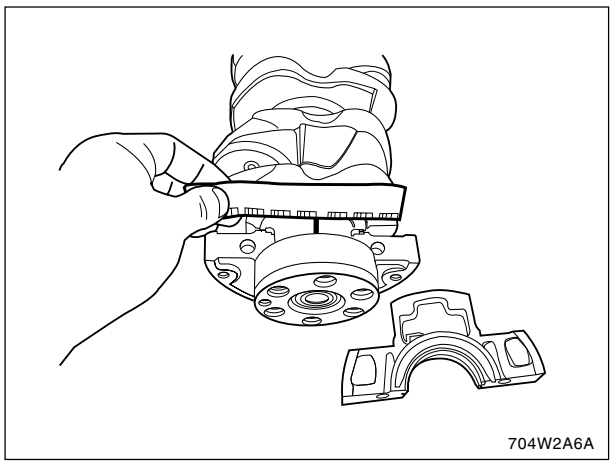

F. CRANK PIN AND CONNECTING ROD BEARING 2 OIL CLEARANCE

1. Put a strip of Plastigage lengthwise in the center of the crank pin.
2. Install the connecting rod and tighten the screws to the specified torque once, and remove the cap again.
3. Measure the amount of the flattening with the scale and get the oil clearance.
4. If the clearance exceeds the allowable limit, replace the bearing.

Oil clearance	Factory spec.	3A139 3A150 3A165	0.025 ~ 0.087 mm 0.00098 ~ 0.00343 in.
		TD1300	0.035 ~ 0.093 mm 0.0014 ~ 0.0037 in.
	Allowable limit		0.20 mm 0.0079 in.
Journal O.D.	Factory spec.	3A139 3A150 3A165	46.959 ~ 46.975 mm 1.84876~ 1.84947 in.
		TD1300	43.959 ~ 43.975 mm 1.73067 ~ 1.73130 in.
Bushing 1 I.D.	Factory spec.	3A139 3A150 3A165	47.000 ~ 47.046 mm 1.85040 ~ 1.85221 in.
		TD1300	44.010 ~ 44.052 mm 1.73268 ~ 1.73433 in.

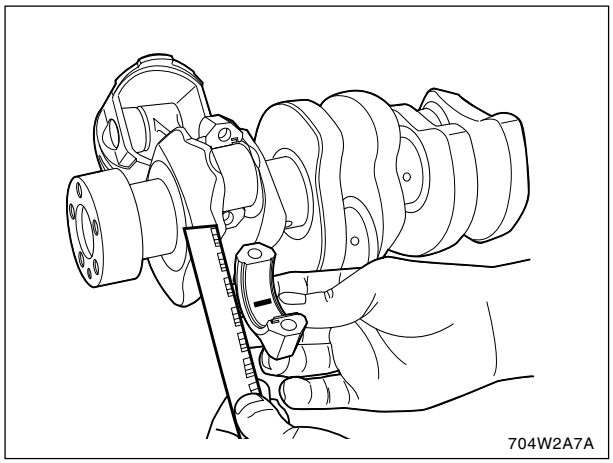

6.2.7 CYLINDER BORE

A. CYLINDER BORE DIAMETER

1. Measure the cylinder liner I.D. at sit positions shown in the figure to find the maximum wear.

TD1300	82.000 ~ 82.022 mm 3.2283 ~ 3.2292 in.
3A139	80.000 ~ 80.022 mm 3.1496 ~ 3.1505 in.
3A150	83.000 ~ 83.022 mm 3.2677 ~ 3.2690 in.
3A165	87.000 ~ 87.022 mm 3.4252 ~ 3.4261 in.

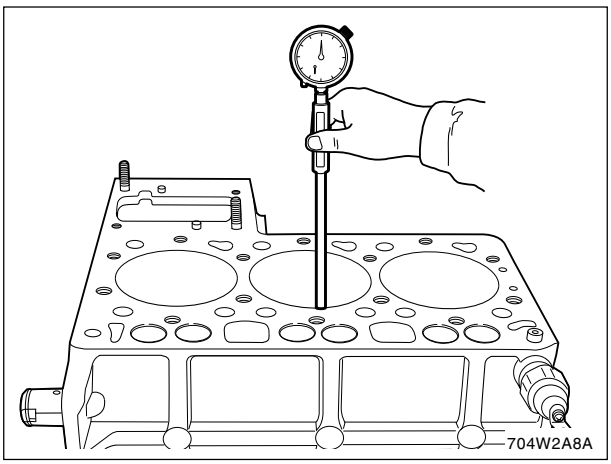

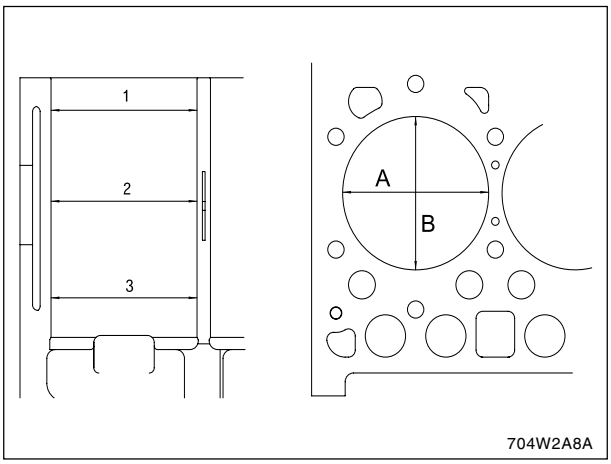

(A) Axial Direction

(B) Transverse Direction

1,2,3 Measuring Points

6.2.8 LUBRICATING SYSTEM

A. ENGINE OIL PRESSURE

1. Remove the oil pressure switch. Install the adapter and pressure tester in its place.
2. Start the engine and run it until it is warmed up. Measure the oil pressure at both idling and rated speed.
3. If the oil pressure is less than the allowable limit, check the oil level, oil filter, oil pump relief valve, oil passages and oil clearance.

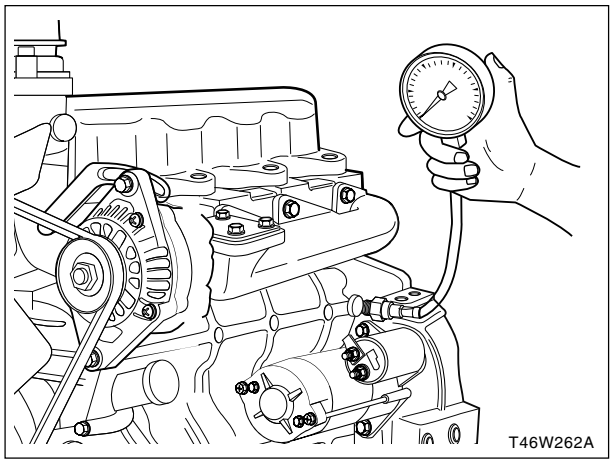

Engine oil pressure	At idle speed	Factory spec.		more than 68.6 kPa 0.7 kgf/cm² 7.11 psi
	At rated speed	3A139 3A150 3A165	Factory spec.	245 ~ 441 kPa 2.5 ~ 4.5 kgf/cm² 35.6 ~ 64.0 psi
			Allowable limit	245 kPa 2.5 kgf/cm² 35.6 psi
		TD1300	Factory spec.	245 ~ 441 kPa 2.5 ~ 4.5 kgf/cm² 35.5 ~ 64.0 psi
			Allowable limit	245 kPa 2.5 kgf/cm² 35.6 psi

(Reference)

Tightening torque	Oil pressure switch	14.7 ~ 19.6 Nm 1.5 ~ 2.0 kgf-m 10.8 ~ 14.5 lb-ft

B. OIL FILTER

1. Drain the engine oil and remove the oil filter to check it.
2. Check the relief valve for dirt, and the seat (2) and ball (1) for damage.
3. If damaged, replace the filter.
4. Check the free length of spring (3).
5. If it is less than the allowable limit, replace it.

Spring free length	Factory spec	35 mm 1.38 in.
	Allowable limit	30 mm 1.18 in.

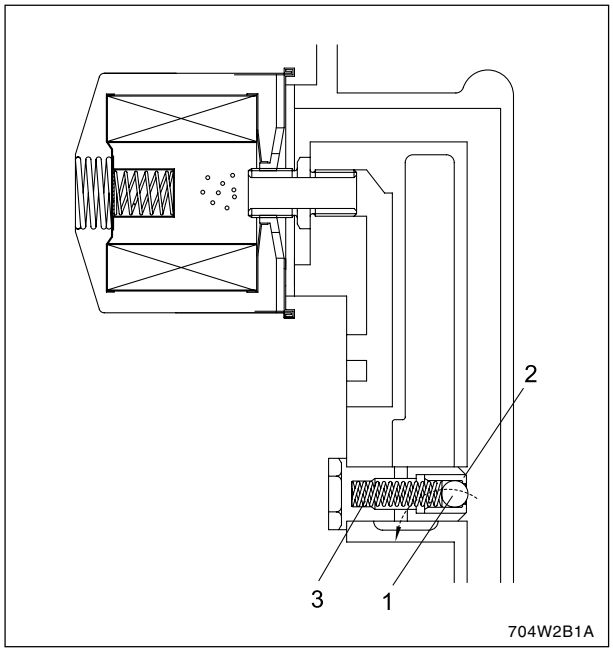

(1) Relief Valve Ball
(2) Relief Valve Seat
(3) Relief Valve Spring

C. ROTOR AND LOBE CLEARANCE OF OIL PUMP

1. Measure the clearance between the outer and inner rotor with a feeler gauge.
2. Measure the clearance between the outer and the housing with a feeler gauge.
3. If the clearance exceeds the allowable limit, replace the pump.

Outer and inner rotor clearance	Factory spec.	0.10 ~ 0.16 mm 0.0039 ~ 0.0063 in.
	Allowable limit	0.20 mm 0.0079 in.
Outer and inner housing clearance	Factory spec.	0.11 ~ 0.19 mm 0.0043 ~ 0.0075 in.
	Allowable limit	0.25 mm 0.0098 in.

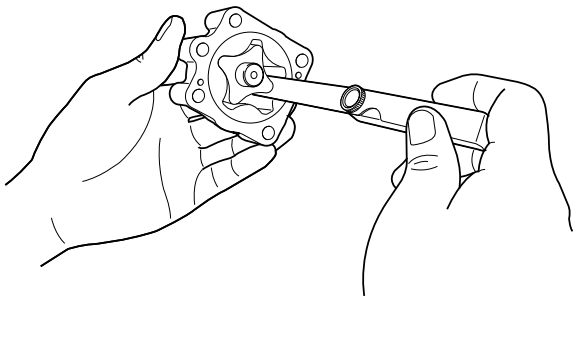

704W2B2A

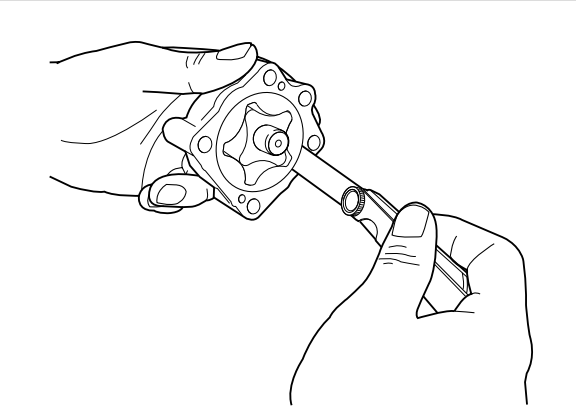

704W2B3A

D. ROTOR END CLEARANCE OF OIL PUMP

1. Put a strip of plastigage on the rotor and assemble the pump.
2. Disassemble the pump and measure the amount of the flattening with the scale to get the clearance.
3. If the clearance exceeds the allowable limit, replace the pump.

End clearance	Factory spec.	0.105 ~ 0.150 mm 0.00413 ~ 0.00591 in.
	Allowable limit	0.20 mm 0.00781 in.

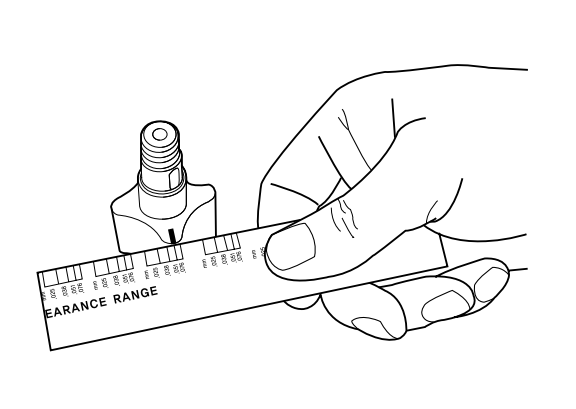

704W2B4A

6.2.9 COOLING SYSTEM

A. CHECKING ADJUSTING

▶ FAN BELT

1. Measure the deflection, depressing the belt halfway between the fan drive pulley and the alternator pulley at 78 N (8 kgf, 18 lbs) of force.
2. If the deflection is not between the factory specifications, loosen the bolts and nuts, and relocate the alternator to adjust.
3. If the belt is damaged or worn (See figure), replace the belt.

Belt tension (direction)	Factory spec	7 ~ 9 mm 0.28 ~ 0.35 in.
		at 78 N (8 kgf, 18 lbs) of force

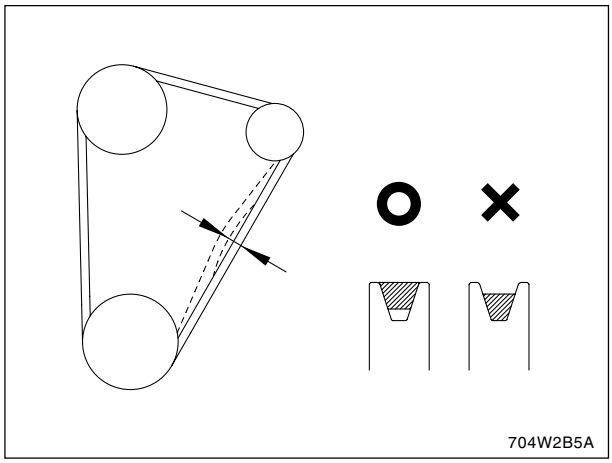

▶ RADIATOR WATER TIGHTNESS

1. Fill radiator with water to the specified amount and warm up the engine.
2. Set a radiator tester and raise the water pressure to the specified pressure.
3. Check the radiator for water leaks.
4. Pinhole water leaks may be repaired with radiator cement. Larger leaks require radiator replacement.

Radiator water tightness	Factory spec	No leaks at 137 kPa (1.4 kgf/cm², 20 psi)

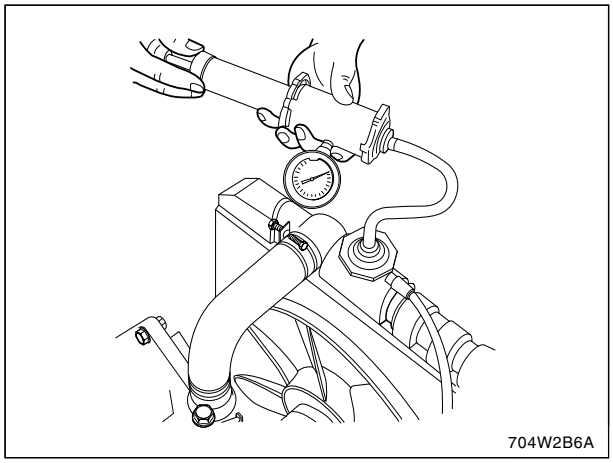

▶ RADIATOR CAP TIGHTNESS

1. Attach a radiator tester on the radiator cap.
2. Apply 88 kPa (0.9 kgf/cm², 13 psi) of pressure and measure the pressure for 10 seconds.
3. If the pressure falls below 59 kPa (0.6 kgf/cm², 9 psi), replace the radiator cap.

Radiator cap tightness	Factory spec	More than 10 seconds for pressure fall from 88 ~ 59 kPa (0.9 ~ 0.6 kgf/cm², 13 ~ 9 psi)

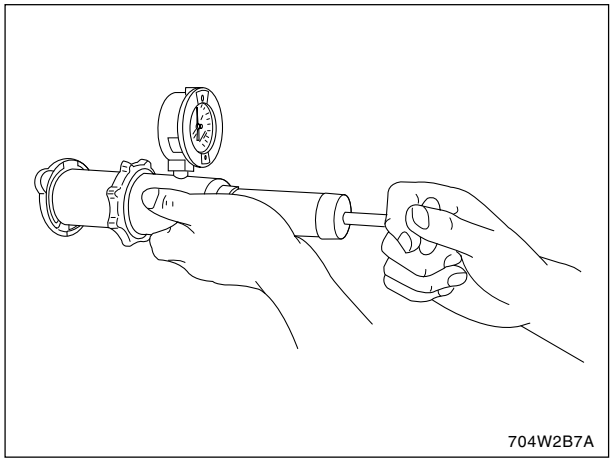

B. DISASSEMBLING AND ASSEMBLING

▶ THERMOSTAT

1. Remove the thermostat cover (2).
2. Take out the thermostat (1).

(When reassembling)

- Apply liquid gasket (Three Bond 1215 or equivalent) to the gasket.

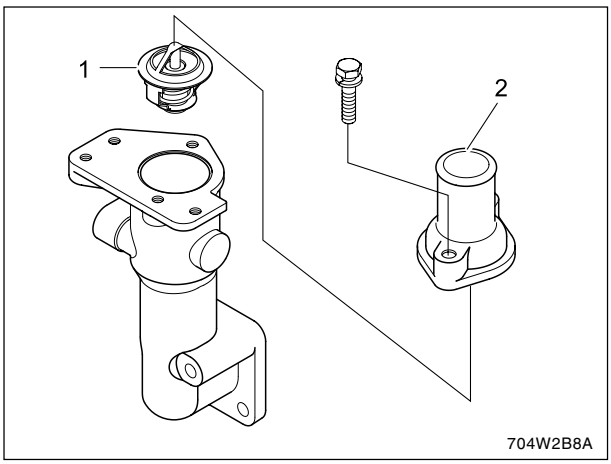

(1) Thermostat (2) Thermostat Cover

▶ WATER PUMP

NOTE:

- *If the coolant is leaked from the hole indicated by the arrow in the figure, it means that the mechanical seal is damaged.*

a. Removal

1. Remove the fan and fan pulley.
2. Remove the water pump body from the gear case cover.
3. Remove the water pump flange (1).
4. Remove the impeller and water pump body (3).
5. Remove the impeller from the water pump shaft.
6. Remove the mechanical seal (4).

b. Installation

Replace the mechanical seal (4) with new one.

CAUTION

- ***The components of the water pump is firmly assembled together and they cannot be easily disassembled or assembled without a special equipement. Therefore, it is recommended to replace the whole water pump assembly.***

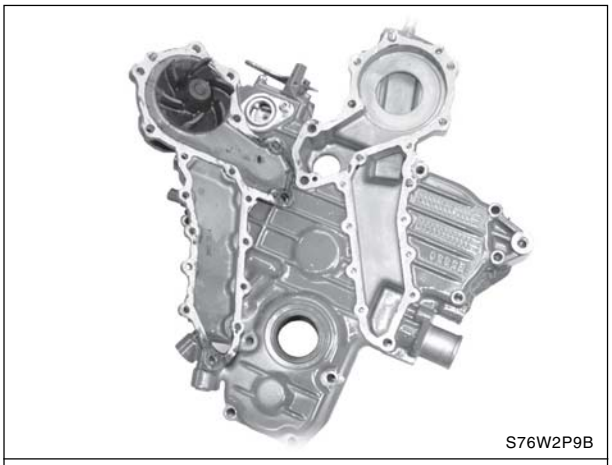

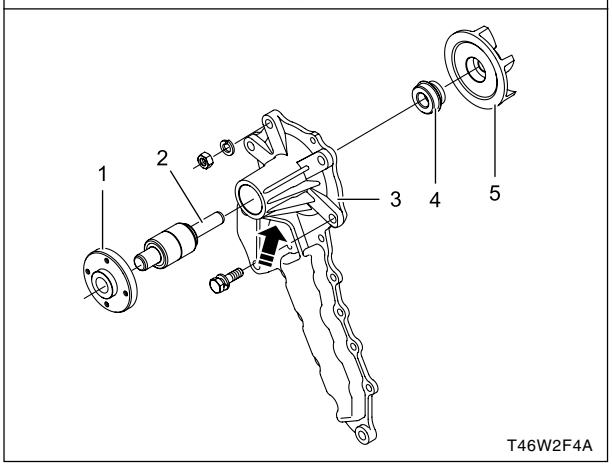

(1) Water Pump Flange
(2) Water Pump Bearing
(3) Water Pump Body
(4) Mechanical Seal
(5) Impeller

C. SERVICING

► THERMOSTAT VALVE OPENING TEMPERATURE

1. Suspend the thermostat in the water by a string with its end inserted between the valve and seat.
2. Heating the water gradually, read the temperature when the valve opens and then when the valve opens to approx. 8 mm (0.315 in.).
3. If the measurements are not within the factory specifications, replace the thermostat.

Opening temperature	Factory spec.	71 ± 1.5 °C (160 ± 3 °F) at beginning
		Lower than 85 °C (185 °F) At 8 mm (0.315 in.) Of opening

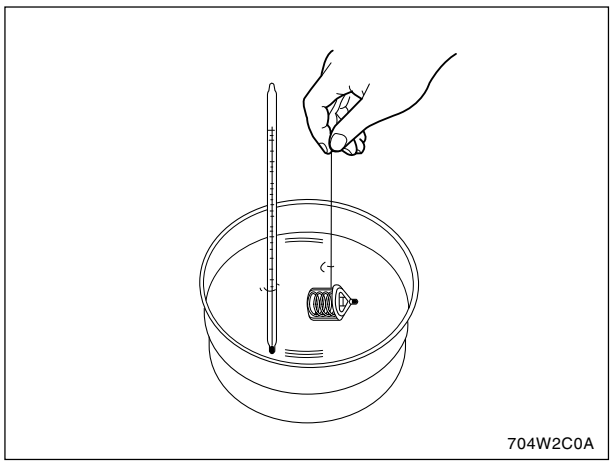

6.2.10 FUEL SYSTEM

A. INJECTION NOZZLE

CAUTION

- ***Never contact with spraying diesel fuel under pressure, pressure, which can have sufficient force to penetrate the skin, causing serious personal injury.***
- ***Be sure nobody is in direction of the spray.***

▶ FUEL INJECTION PRESSURE

1. Set the injection nozzle to the nozzle tester.
2. Measure the injection pressure.
3. If the measurement is not within the factory specifications, adjust with the adjustment washer (1) inside the nozzle holder.

(Reference)

- Each adjustment washer of 0.1 mm (0.004 in.) will adjust the fuel injection pressure by approx. 10 kgf/cm².

Fuel injection pressure	Factory spec.	14.71 MPa 150~160 kgf/cm² 2,134~2,276 psi

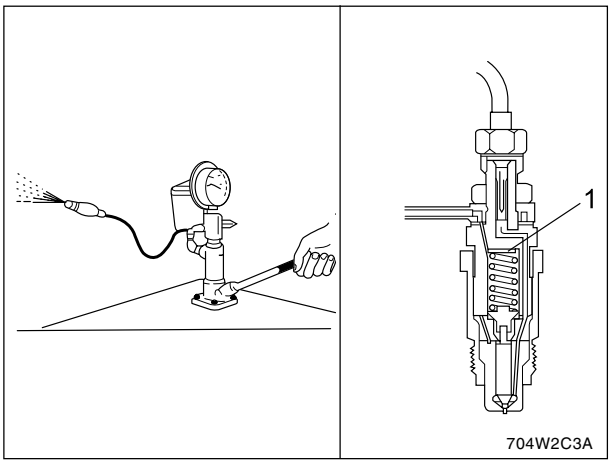

(1) Adjustment Washer

▶ FUEL TIGHTNESS OF NEEDLE VALVE SEAT

1. Connect the injection nozzle to the nozzle tester.
2. Apply a pressure 130 kgf/cm² (12.75 MPa, 1849 psi). Keep the nozzle under this pressure for 10 seconds. Check to see if fuel leaks from the nozzle.
3. If the fuel should leak, replace the nozzle.

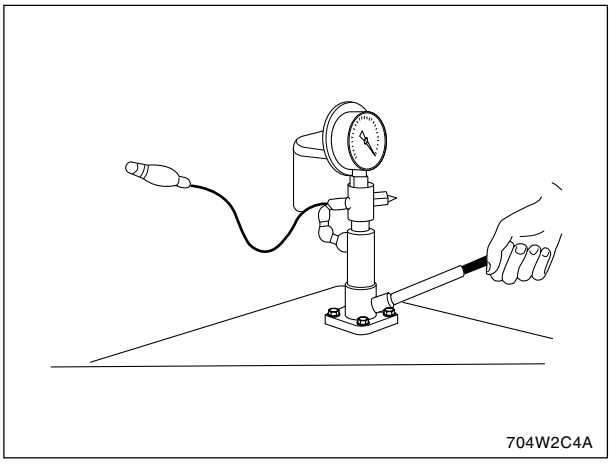

CK25/27/30/35

CLUTCH

TABLE OF CONTENTS

1. SPECIFICATIONS 3-3

2. OPERATING PRINCIPLE 3-4

3. TROUBLESHOOTING 3-5

4. CHECKING AND ADJUSTMENT 3-6

4.1 First stage (clutch pedal play adjustment) 3-6

4.2 Second stage (adjustment of clutch pedal stopper bolt) 3-6

4.3 Third stage (adjustment of safety switch) 3-6

5. SERVICING 3-7

5.1 Disassembling and assembling of the clutch housing 3-7

5.1.1 Bonnet 3-7

5.1.2 Hydraulic pipe and electric wiring 3-7

5.1.3 Propeller shaft 3-8

5.1.4 Separating engine & clutch housing 3-8

5.1.5 Disassembling the clutch 3-9

5.1.6 Dual clutch 3-10

5.1.7 Clutch release hub and clutch lever 3-10

5.2 Inspection for overhaul 3-11

5.2.1 Release lever height 3-11

5.2.2 Mutual difference of release levers 3-11

5.2.3 Clearance between travelling pressure plate and adjusting screw 3-12

5.2.4 Spline backlash between clutch disc boss and main shaft 3-12

5.2.5 Clutch disc wear 3-13

5.2.6 Pressure plate flatness 3-13

5.2.7 Checking pressure plate and flywheel 3-13

5.2.8 Clutch spring free height 3-14

5.2.9 Thrust ball bearing 3-14

5.2.10 Clutch lever wear 3-14

1. SPECIFICATIONS

Item		Reference Value	Allowable Limit
Clutch pedal free play		20 ~ 30 mm 0.79 ~ 1.18 in.	-
Safety switch pedal movement (When depressing clutch pedal to the stroke end)		3.5 ~ 4.5 mm 0.14 ~ 0.18 in.	-
Clutch disc O.D	Manual type	-	225 mm 8.86 in.
	HST type	-	215 mm 8.46 in.
Clutch thickness (Free thickness) (Manual Type)		-	7.8 ~ 8.4 mm 0.307 ~ 0.331 in.
Disc facing surface to rivet top (Depth)		-	0.5 mm 0.020 in.
Backlash clutch disc spline boss to main shaft		-	2.0 mm 0.079 in.
Pressure plate flatness		-	2.0 mm 0.079 in.
Clearance brake pedal shaft to clutch pedal bushing		-	0.5 mm 0.0197 in.
Clearance main shaft to clutch release hub bushing(HST type)		-	0.3 mm 0.0118 in.

2. OPERATING PRINCIPLE

A single disc clutch is standard equipment on the model CK25H/27H/30H/35H tractor and the model CK25/27/30/35 tractor equipped with the dual stage clutch.

The clutch assembly consists of the clutch pressure plate, clutch disc (1), flywheel (2), release bearing (3), and hub assembly (4).

The clutch disc is a dry metallic type assembly, which is mechanically operated. The clutch disc is installed between the flywheel and the pressure plate assembly. The clutch pressure plate is attached to the flywheel with six bolts.

The spring loaded pressure plate presses the clutch disc into contact with the engine flywheel. The friction between the clutch disc linings, the surfaces of the flywheel and the clutch pressure plate transmit the power flow from the engine.

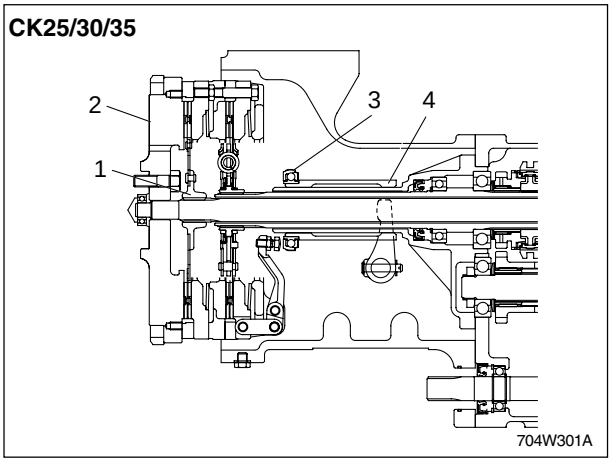

(1) Clutch Disc
(2) Fly Wheel
(3) Clutch Release Bearing
(4) Hub

The clutch pedal assembly (1) is connected by an adjustable rod (2) to a clutch rod pin (3) and clutch rod (4) on which a fork is mounted.

The fork engages a sliding release bearing hub assembly. When the clutch pedal is applied, the release bearing comes in contact with the ends of the clutch release levers in the pressure plate. Depressing the clutch pedal causes the cross shaft and fork to move the release bearing forward and depress the pressure plate release levers. This action draws the pressure plate away from the clutch disc, releasing the disc from contact with the flywheel.

The friction drive from the engine is then disconnected to enable gear changes to take place.

After a gear change is made and the clutch pedal is released, the release bearing and hub are returned to the free position by the clutch lever.

The main springs of the pressure plate assembly then reassert pressure on the plate moving it forward to press the clutch disc into contact with the flywheel and re-establish the drive to the transmission.

The release bearing is pre-lubricated and never requires greasing.

The pressure plate assembly is not repairable and must be replaced as a complete assembly if service is required.

The lever height is adjustable and should be checked whenever the clutch is removed or a new clutch is installed.

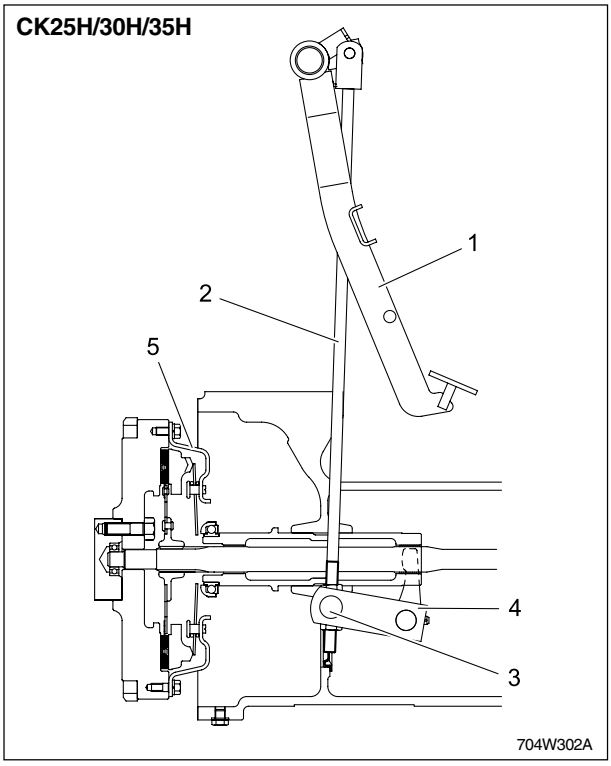

(1) Clutch Pedal Assembly
(2) Adjustable Rod
(3) Clutch Rod Pin
(4) Clutch Rod
(5) Clutch Pressure Plate

3. TROUBLESHOOTING

Symptom	Probable Cause	Solution
Clutch drags	• Clutch pedal free play excessive	Adjust
	• Clutch release lever improperly adjusted	Adjust
	• Clutch disc boss spline sticking or rusted	Replace or remove rust
	• Dust on clutch disc generated from clutch disc facing	Remove rust
	• Grease or oil on clutch disc facing	Replace
	• Clutch disc or pressure plate warped	Replace
	• Pilot bearing sticking or worn	Replace
Clutch slips	• Clutch pedal free play too small	Adjust
	• Clutch release lever improperly adjusted	Adjust
	• Clutch disc excessively worn	Replace
	• Grease or oil on clutch disc facing	Replace
	• Clutch disc or pressure plate warped	Replace
	• Clutch spring weaken or broken	Replace
	• Diaphragm spring weaken or broken (CK25/27/30/35)	Replace
Chattering	• Grease or oil on clutch disc facing	Replace
	• Clutch disc or pressure plate warped	Replace
	• Clutch disc boss spline worn or sticking or rusted	Replace or remove rust
	• Main shaft bent	Replace
	• Pressure plate or flywheel face cracked or scored	Replace
	• Clutch disc boss spline and main shaft spline worn	Replace
	• Diaphragm spring strength uneven or broken (CK25/27/30/35)	Replace
Rattle during running	• Clutch disc boss spline worn	Replace
	• Release bearing worn or sticking	Replace
	• Pilot bearing worn or sticking	Replace
	• Torsion spring on clutch disc weaken or broken	Replace
Clutch squeaks	• Release bearing sticking or dry	Replace/Lubricate
	• Pilot bearing worn or sticking	Replace
	• Clutch disc excessively worn	Replace
Vibration	• Main shaft bent	Replace
	• Clutch disc rivet worn or broken	Replace
	• Clutch parts broken	Replace

4. CHECKING AND ADJUSTMENT

4.1 FIRST STAGE (CLUTCH PEDAL PLAY ADJUSTMENT)

1. Press clutch pedal (1) by hand and measure (A) at the end of pedal.
2. If the measurement is not within the factory specifications, loosen lock nut (3), (4) of clutch rod (2), adjust the clutch rod (2) length.
3. Retighten the lock nut (3), (4).

Item	Specified
Clutch pedal play (A)	20 ~ 30 mm 0.79 ~ 1.18 in.

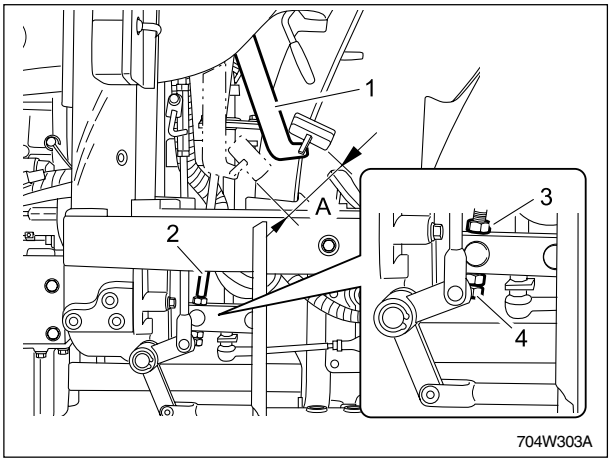

(1) Clutch Pedal (2) Clutch Rod
(3) Lock Nut (4) Lock Nut

4.2 SECOND STAGE (ADJUSTMENT OF CLUTCH PEDAL STOPPER BOLT)

1. When working with clutch pedal and clutch disconnected, avoid setting the bolt to prevent excessive force to clutch.
2. If setting (A) of stopper bolt exceeds the specified, loosen lock nut (2), readjust the length, and then set with lock nut.

Item	Specified
Height (A) of clutch pedal stopper bolt	30 mm 1.18 in.

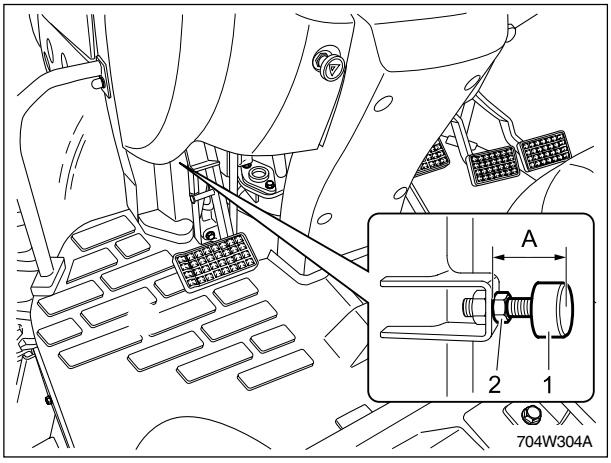

(1) Stopper Bolt (2) Lock Nut

4.3 THIRD STAGE (ADJUSTMENT OF SAFETY SWITCH)

1. Measure clearance (A) of safety switch (1) and clutch pedal (2).
2. If the measured value exceeds the specified, loosen safety switch lock nut (3).
   Readjust and then tighten the lock nut.

Item	Specified
Clearance (A) of safety switch and clutch pedal	4 ~ 5 mm 0.157 ~ 0.197 in.

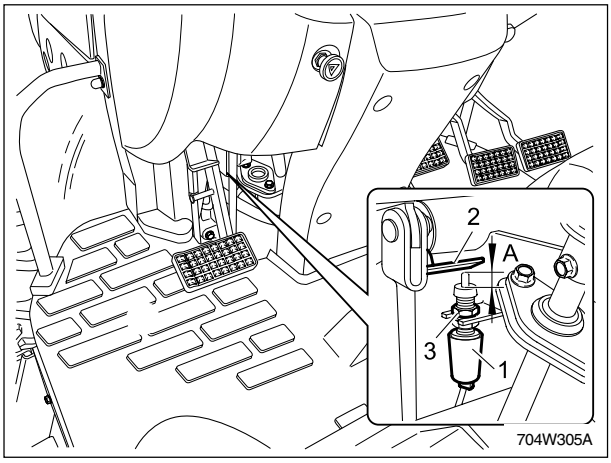

(1) Safety Switch (3) Safety Switch Lock Nut
(2) Clutch Pedal

5. SERVICING

5.1 DISASSEMBLING AND ASSEMBLING OF THE CLUTCH HOUSING

5.1.1 BONNET

1. Open the bonnet (1) and disconnect the electronic connector (2).
2. Remove the air-cylinder (3).
3. Remove the snap-pin, joint-pin and bonnet(1).
4. Remove the side cover (LH/RH) (4).
5. Disconnect the battery terminal (-) (5).

NOTE:

- *When disconnecting the battery cords, disconnect the (-) cord first, when connecting, (+) cord first.*

(For assembly)

After connecting the battery terminal (-), apply a little grease to it.

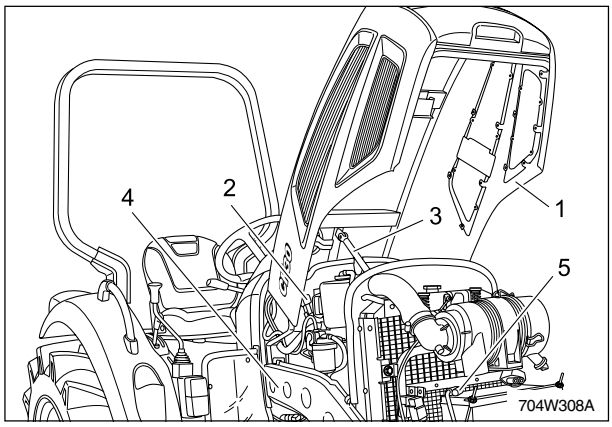

(1) Bonnet
(2) Connector
(3) Air-cylinder
(4) Side Cover
(5) Battery Terminal (-)

5.1.2 HYDRAULIC PIPE AND ELECTRIC WIRING

1. Remove the steering hoses(R, P, T).(2, 3, 4).
2. Remove the accelerator wires (hand, pedal).(5, 6)
3. Disconnect the bonnet wire harness 2 Assy.
4. Remove the rubber pipe 1 (7) out of suction pipe 3 (8).
5. Remove the hydraulic pipe (B1).(9)
6. Remove the cooling pipe 3 (HST type)
7. Remove the steering hose (L).(10)
8. Remove the cooling pipe 4 (HST type)
9. Disconnect the bonnet wire harness 1 Assy.(11)

(When reassembling)

- A hose classification
  - Steering hose P : A red tag attachment
  - Steering hose R : A white tag attachment
  - Steering hose L : A yellow tag attachment
  - Steering hose T : No tag

Item	Tightening torque
Steering hose P, R, L	9.8 Nm 1.0 kgf-m 7.2 lb-ft
Pipe bed	9.8 Nm 1.0 kgf-m 7.2 lb-ft

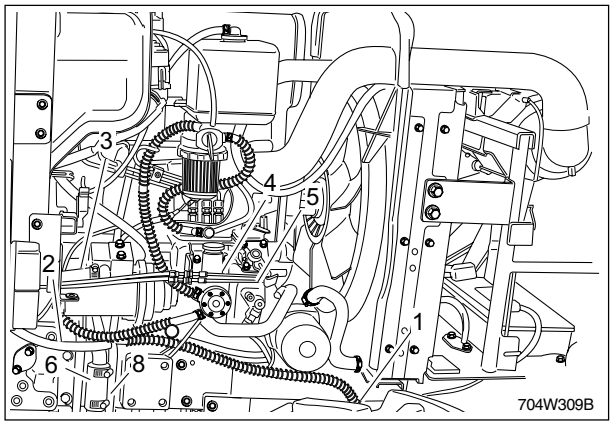

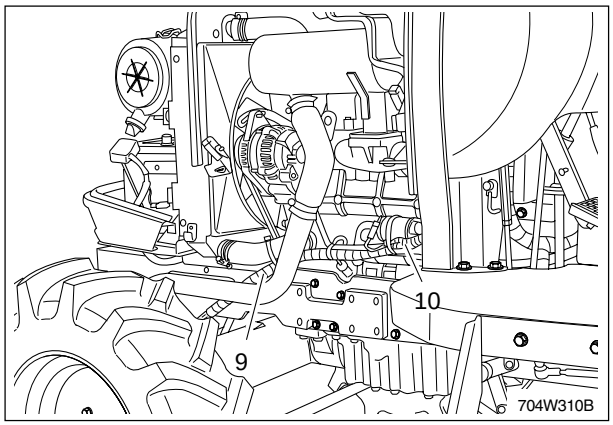

(1) Steering Hose (R)
(2) Steering Hose (P)
(3) Steering Hose (T)
(4) Accelerator Wire (Hand)
(5) Accelerator Wire (Pedal)
(6) Rubber Pipe
(7) Suction Pipe 3
(8) Hydraulic Pipe (B1)
(9) Steering Hose (L)
(10) Bonnet Wire Harness 1 Assy

5.1.3 PROPELLER SHAFT

1. Remove the bolts and slide the propeller shaft cover .
2. Tap out the spring pin (8), and then slide the coupling (2) to the rear.
3. Romove the propeller shaft and cover.

(When reassembling)

- Apply grease to the splines of the propeller shaft.

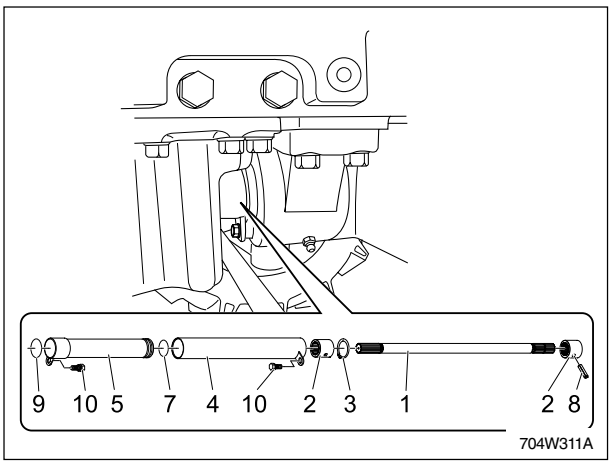

(1) Propeller Shaft
(2) Coupling
(3) Cir-Clip
(4) Propeller Shaft Cover 1
(5) Propeller Shaft Cover 2
(6) O-ring
(7) O-ring
(8) Spring Pin
(9) O-ring
(10) Bolt

5.1.4 SEPARATING ENGINE & CLUTCH HOUSING

1. Place the jacket to the bottom of the clutch housing and engine.
2. Remove the mounting bolts for the fuel tank support.
3. Separate engine and clutch housing.

(When reassembling)

- Apply grease to the spline of main shaft.
- Apply liquid gasket (Three Bond 1,211 or equivalent) to the joint face of the flywheel housing and clutch housing.

Item	Tightening torque
Bolts, nuts	48.1 ~ 55.9 Nm 4.9 ~ 5.7 kgf-m 1.004 ~ 1.167 lb-ft
Stud bolts	24.5 ~ 31.4 Nm 2.5 ~ 3.2 kgf-m 0.512 ~ 0.655 lb-ft

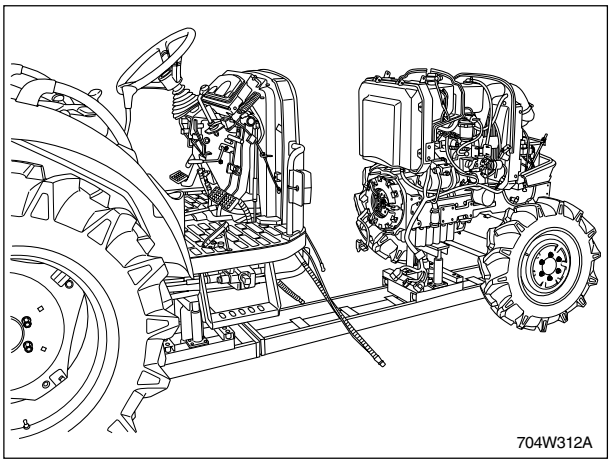

5.1.5 DISASSEMBLING THE CLUTCH

1. Put alignment marks on the clutch cover and flywheel.
2. Insert the clutch center tool.
3. Remove the clutch assembly.

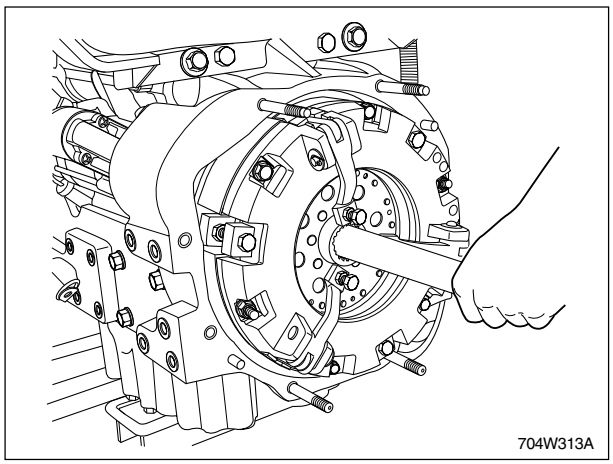

(When reassembling)

- Assemble the PTO clutch disc with the shorter hub toward the fly wheel.
- Apply molybenium disulfide (Three Bond 1901 or equivalent) to the splines (A) of the clutch disc boss.

Item	Specified
Clutch mounting screw tightening torque	23.5 ~ 27.5 Nm 2.4 ~ 2.8 kgf-m 17.4 ~ 20.3 lb-ft

NOTE:

- *Do not allow grease or oil on the clutch disc facing.*

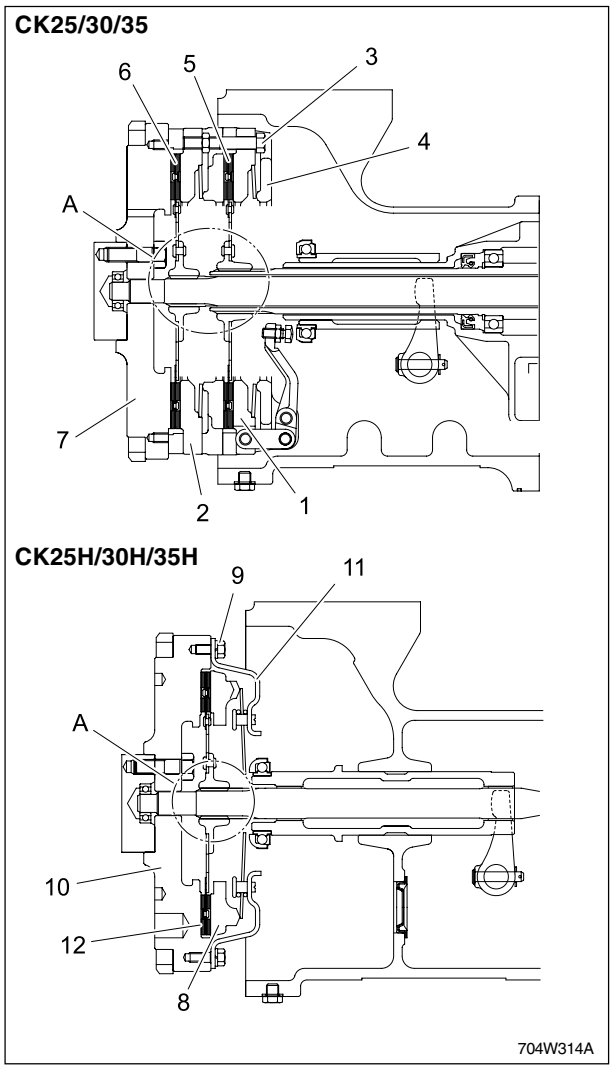

(1) Pressure Plate 2
(2) Pressure Plate 1
(3) Bolt
(4) Clutch Pressure Plate Assy
(5) Clutch Disc Assy (Driving)
(6) Clutch Disc Assy (PTO)
(7) Flywheel
(8) Clutch Disc
(9) Bolt
(10) Flywheel
(11) Clutch Cover

5.1.6 DUAL CLUTCH (CK25/27/30/35)

A. MOUNTING TO MAIN CLUTCH ASSEMBLING TOOL

1. Put parting marks on clutch cover and pressure plate.
2. Mount clutch on dual clutch exclusive tool.

(When reassembling)

- Align the marks, assemble clutch cover and pressure plate to insure proper dynamic balance.

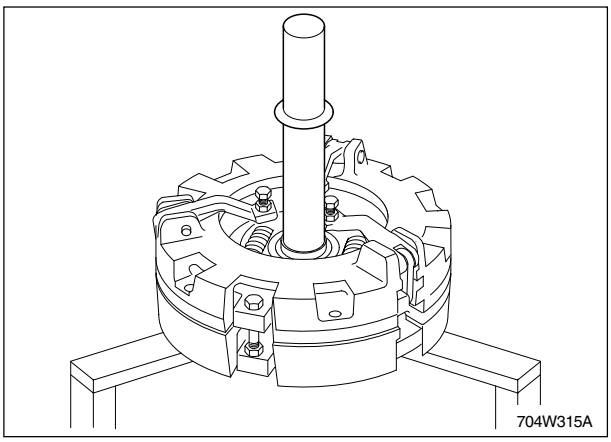

B. DISASSEMBLING CLUTCH ASSEMBLY

1. Draw out the split pins, plain washer, and joint pin from the release lever kits.
2. Loosen the tightened screws and the three adjusting screws. Remove the clutch covers.
3. Remove the clutch cover 2(8), diaphragm spring (3), pressure plate 2(6) and clutch disc ass'y (driving) (5) in order.
4. Remove the clutch cover 1(4), diaphragm spring(3) and pressure plate 1(2) in order.

IMPORTANT

- ***When assembling the clutch covers and the pressure plates be sure to align the marks to insure proper dynamic balance.***
- ***Apply molybdenum disulfide (Three Bond 1901 or equivalent) to the adjusting screws and in the hole of the clevis pins on the pressure plate.***

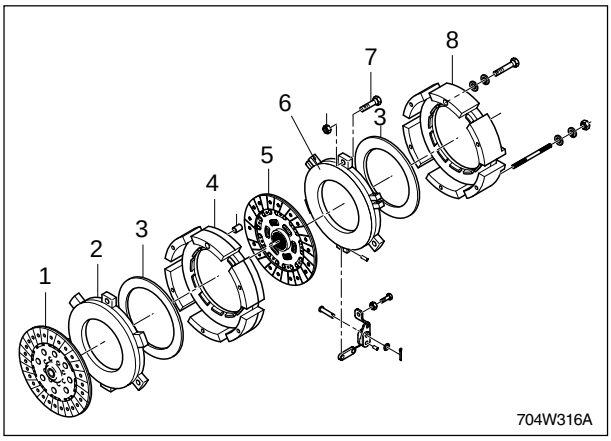

(1) Clutch Disc Ass'y (PTO)
(2) Pressure Plate 1
(3) Diaphragm Spring
(4) Clutch Cover 1
(5) Clutch Disc Assy (Driving)
(6) Pressure Plate 2
(7) Adjuting Screw
(8) Clutch Cover 2

5.1.7 CLUTCH RELEASE HUB AND CLUTCH LEVER

1. Draw out the clutch release hub (5).
2. Remove the split pin (9) and joint pin (8).
3. Draw out the clutch lever (1) to take out the release fork (7).

(When reassembling)

- Make sure the direction of fork (7) is correct.
- Apply grease to the clutch release hub (5).

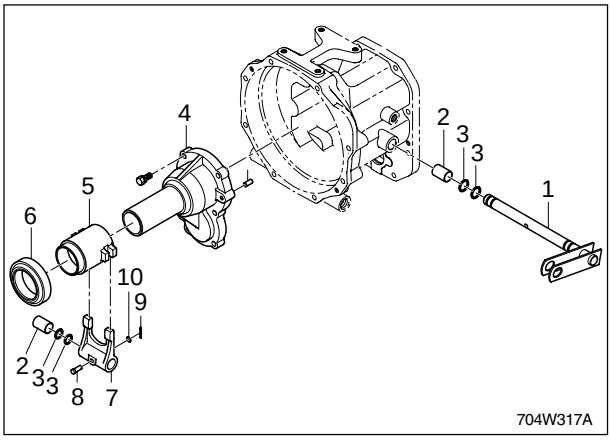

(1) Clutch Lever
(2) Bushing
(3) O-ring
(4) Propeller Shaft Case
(5) Clutch Release Hub
(6) Thrust Ball Bearing
(7) Clutch Release Fork
(8) Joint Pin
(9) Split Pin
(10) Plain Washer

5.2 INSPECTION FOR OVERHAUL

5.2.1 RELEASE LEVER HEIGHT (CK25/27/30/35)

1. Measure the height from the clutch cover to the top of the adjusting screws with a scale or vernier calipers.
2. If the height exceeds the allowable limit; check the clutch disc, pressure plate and other parts.

Item	Specified
Release lever height (A)	101 ~ 102 mm 3.976 ~ 4.016 in

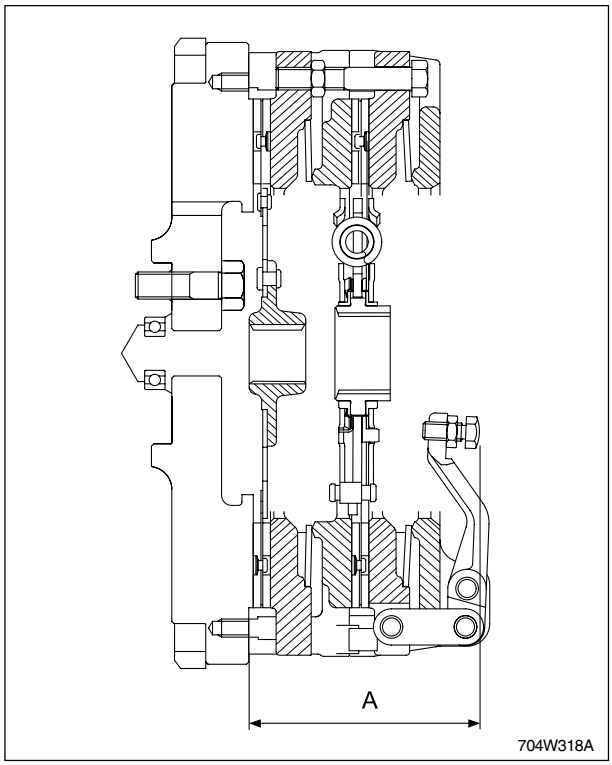

5.2.2 MUTUAL DIFFERENCE OF RELEASE LEVERS (CK25/27/30/35)

1. Insert the clutch centering tool, clutch center tool guide, and gauge ring.
2. Measure the mutual difference of release levers with a feeler gauge.
3. If the measurement exceeds the factory specifications, adjust the height of release levers which contacts with a gauge ring with the adjusting screws so that the mutual difference may be within the factory specifications.

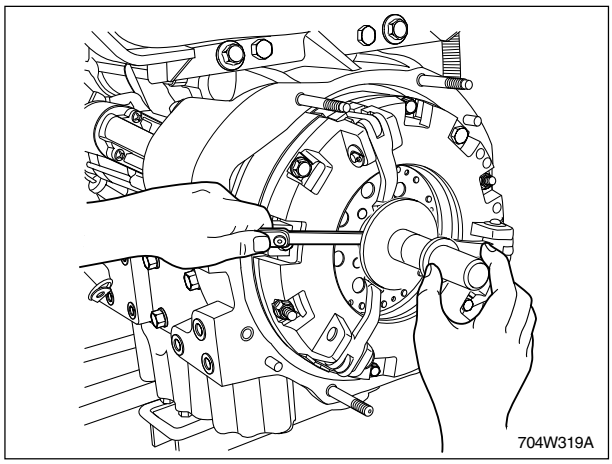

Item	Specified
Mutual Difference	0.3 mm (Less than) 0.12 in (Less than)

Item	Tightening torque
Release lever height adjusting screw lock nut tightening torque	17.7 ~ 20.6 Nm 1.8 ~ 2.1 kgf-m 15.2 ~ 13.0 lb-ft

NOTE:

- *Apply liquid lock (Loctite #271 or equivalent) to the adjusting screws and lock nuts.*

5.2.3 CLEARANCE BETWEEN TRAVELLING PRESSURE PLATE AND ADJUSTING SCREW (CK25/27/30/35)

1. Measure the clearance between traveling pressure plate and the bottom of the head of adjusting screw with a feeler gauge.
2. If the clearance is not within the factory specifications, loosen the lock nut and rotate adjusting screw to adjust.
3. After adjustment, tighten the lock nut firmly.

Item	Specified
Clearance between pressure plate and adjusting screw.(A)	1.19 ~ 1.21 mm 0.047 ~ 0.048 in.

Item	Specified
Adjusting screw locknut tightening torque	39.2 ~ 44.1 Nm 4.0 ~ 4.5 kgf-m 28.9 ~ 32.5 lb-ft

NOTE:

- *Do not allow grease and oil on the clutch disc facing.*

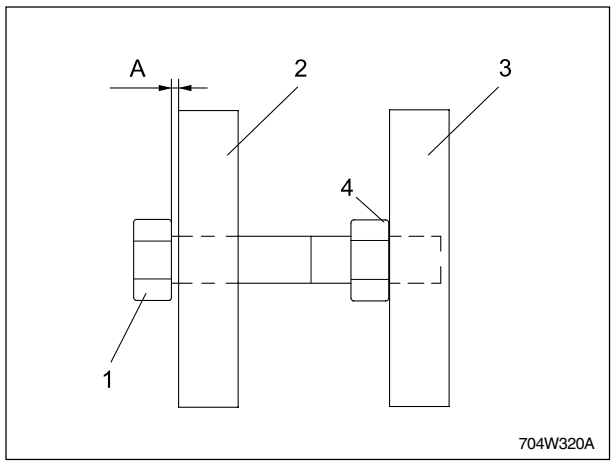

(1) Adjusting Screw
(2) Travelling Pressure Plate
(3) PTO Pressure Plate
(4) Lock Nut

5.2.4 SPLINE BACKLASH BETWEEN CLUTCH DISC BOSS AND MAIN SHAFT

1. Mount the clutch disc to the main shaft.
2. Hold the main shaft so that it does not turn.
3. Rotate the disc lightly and measure the displacement around the disc edge.
4. If the measurement exceeds the allowable limit, replace it.

Item	Allowable limit
Displacement around disc edge	2.0 mm 0.079 in.

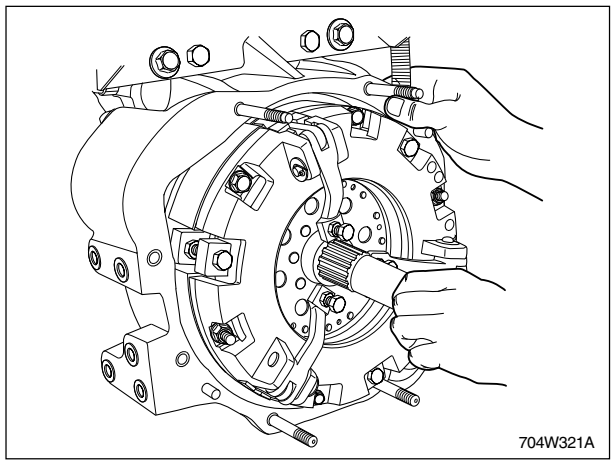

5.2.5 CLUTCH DISC WEAR

1. Measure the depth from clutch disc surface to the top of rivet at least 10 points with a depth gauge.
2. If the depth is less than the allowable limit, replace it.
3. If oil is sticking to clutch disc, or disc surface is carbonized, replace it.

   In this case, inspect transmission main shaft oil seal, engine rear oil seal, and other points for oil leakage.

Item	Allowable limit
Depth to rivet top	0.5 mm 0.02 in.

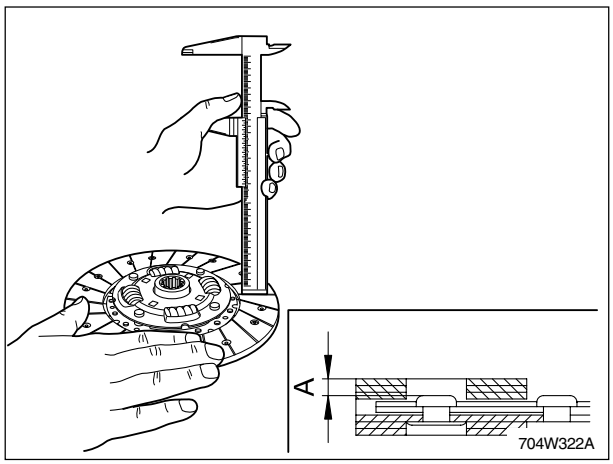

5.2.6 PRESSURE PLATE FLATNESS

1. Place a straightedge (1) on the pressure plate and measure clearance with a feeler gauge (2) at several points.
2. If the clearance exceeds the allowable limit, replace it.
3. When the pressure plate is worn around its outside and its inside surface only is in contact with the straightedge, replace it even if the clearance is within the allowable limit.

Item	Allowable limit
Clearance between pressure plate and straightedge	0.2 mm 0.0079 in.

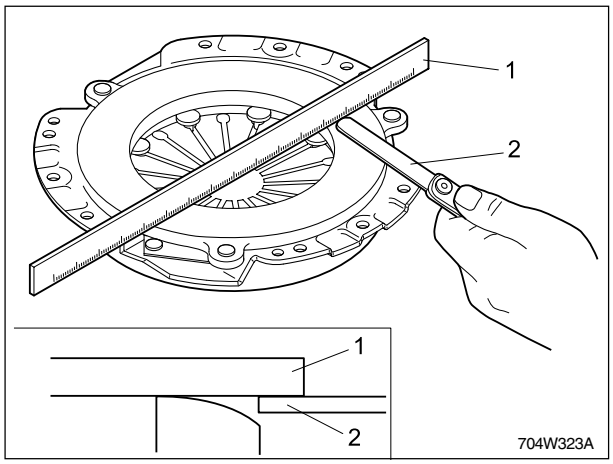

(1) Straightedge

(2) Feeler Gauge

5.2.7 CHECKING PRESSURE PLATE AND FLYWHEEL (CK25/27/30/35)

1. Wash the pressure plate and flywheel with a suitable cleaning solvent to remove dirt and grease before making inspection and adjustments.
2. Check friction surface of pressure plate and flywheel for scoring and roughness.

   * Slight roughness may be smoothed by using fine emery cloth.
3. If these parts has deep score or grooves on their surface, they should be replaced.

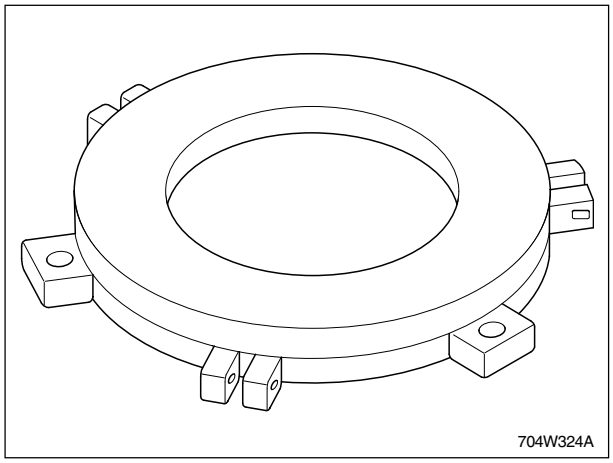

5.2.8 CLUTCH SPRING FREE HEIGHT (CK25/27/30/35)

1. Put the clutch spring on the surface plate.
2. Place a straightedge on the diaphragm spring and measure the free height.
3. If the mesurement is less than the allowable limit, replace it.
4. Check for cracks, if defects are found, replace it.

Item	Specified
Diaphragm spring free height	7.4 mm 0.2913 in.

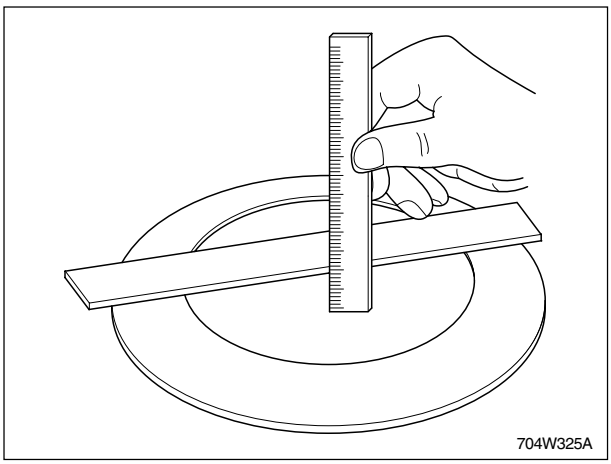

5.2.9 THRUST BALL BEARING

1. Check the contacted is worn excessive wear.
2. With inner wheel seized and outer wheel loaded, check for abnormal noise or operation.
3. If faulty, replace it.

CAUTION

- ***When assembling bearing, take care that the outer wheel is not shocked.***

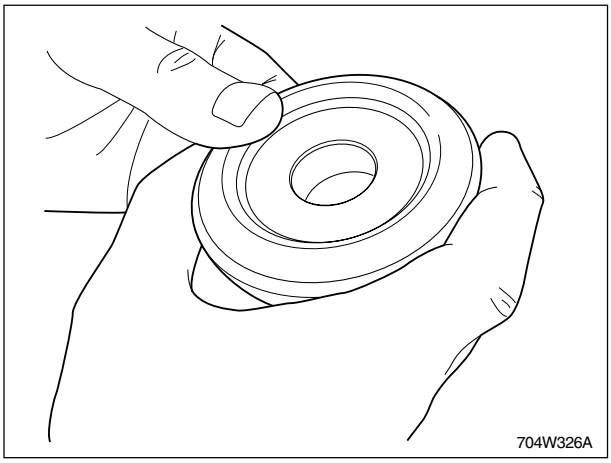

5.2.10 CLUTCH LEVER WEAR

1. Measure the contact portion O.D. of the clutch lever with an outside micrometer.
2. If the measurement exceeds the allowable limit, replace it.

Item	Factory spec.
Clutch lever O.D.	19.967 ~ 20.000 mm 0.786 ~ 0.787 in.

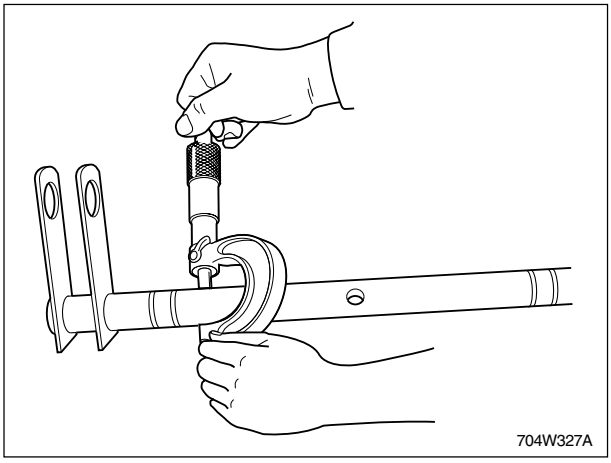

CK25/27/30/35

TRANSMISSION

TABLE OF CONTENTS

1. SPECIFICATIONS 4-3

2. OPERATING PRINCIPLE 4-5

2.1 Power train diagram 4-5

2.2 Power train 4-7

2.2.1 Main gear shift section 4-7

2.2.2 Synchro operation 4-8

2.2.3 Reverse shift section 4-9

2.2.4 Range shift section (manual) 4-10

2.2.5 Range shift section (HST) 4-11

2.2.6 Creep gear shift section (option) 4-12

2.2.7 Front wheel drive section 4-13

2.3 Transmission shift linkage structure 4-14

2.3.1 Main gear shift lever 4-14

2.3.2 Shuttle shift lever 4-15

2.3.3 Range shift lever (manual) 4-16

2.3.4 Range shift lever(HST) 4-17

2.3.5 Creep shift lever(option) 4-18

2.3.6 Front wheel drive shift 4-19

2.4 PTO section 4-20

2.4.1 Power train diagram 4-20

2.4.2 PTO power train 4-21

2.4.3 PTO shift linkage 4-22

2.5 Differential gear 4-23

2.5.1 Structure 4-23

2.5.2 Principle of differential system 4-24

2.5.3 Differential lock system 4-25

3. TROUBLESHOOTING 4-26

4. SERVICING 4-27

4.1 Disassembly and reassembly 4-27

4.1.1 Draining the transmission fluid 4-27

4.1.2 Bonnet 4-27

4.1.3 Hydraulic tube and electric wiring 4-28

4.1.4 Propeller shaft 4-28

4.1.5 Separating engine & clutch housing 4-29

4.1.6 Step mat, splashboard 4-29

4.1.7 Frame assy 4-30

4.1.8 Rops 4-30

4.1.9 Seat, levers 4-30

4.1.10 Fender 4-31

4.1.11 Front cover, step 4-31

4.1.12 Joystick valve, etc 4-31

4.1.13 Disassembling the clutch housing 4-32

4.1.14 Disassembling the middle case 4-32

4.1.15 Disassembling the propeller shaft case 4-33

4.1.16 Disassembling range shift shaft 4-34

4.1.17 Main shift cover 4-35

4.1.18 Shuttle system 4-36

4.1.19 Main shift gear 4-37

TABLE OF CONTENTS

4.1.20 Creep shift gear (option) 4-39

4.1.21 Disassembling spiral bevel pinion 4-41

4.1.22 Rear PTO 4-42

4.1.23 Mid PTO 4-43

4.1.24 Tube, aux. control valve (if attached) 4-44

4.1.25 Hydraulic cylinder 4-45

4.1.26 Separation of differential gear assembly 4-46

4.1.27 Disassembling of differential gear 4-47

4.2 Inspection for overhaul 4-48

4.2.1 Backlash and tooth contact between spiral bevel gear and spiral bevel pinion shaft 4-48

4.2.2 Clearance between differential pinion shaft and differential pinion 4-50

4.2.3 Backlash between differential pinion and differential side gear 4-50

4.2.4 Clearance between differential case bore (differential case cover bore) and differential side gear boss 4-51

4.2.5 Bearing check 4-51

4.2.6 Gear check 4-52

4.2.7 Checking for clearance between transmission fork and shift groove 4-52

4.2.8 Clearance between gear and spline or hub and spline 4-52

4.2.9 Synchro assembly check 4-53

1. SPECIFICATIONS

Item		Reference Value CK25/27/30/35	Allowable Limit
Spiral bevel gear pinion turning torque		0.1 ~ 0.13 kgf-m	-
PTO shaft lock nut tightening torque		15 ~ 20 kgf-m	-
Backlash between	Differential pinion to differential side gear	0.15 ~ 0.25 mm 0.0059 ~ 0.0098 in.	-
	Differential washer thickness	1.5, 1.6, 1.7 mm 0.0591, 0.0630, 0.0669 in.	-
Spiral bevel gear turning torque		0.4 ~ 0.65 kgf-m	-
Adjusting shims thickness		0.1, 0.2, 0.5 mm 0.0039, 0.0078, 0.0197 in.	-
Backlash between spiral bevel pinion gear and spiral bevel gear		0.15 ~ 0.25 mm 0.0059 ~ 0.0098 in.	-

2. OPERATING PRINCIPLE

2.1 POWER TRAIN DIAGRAM

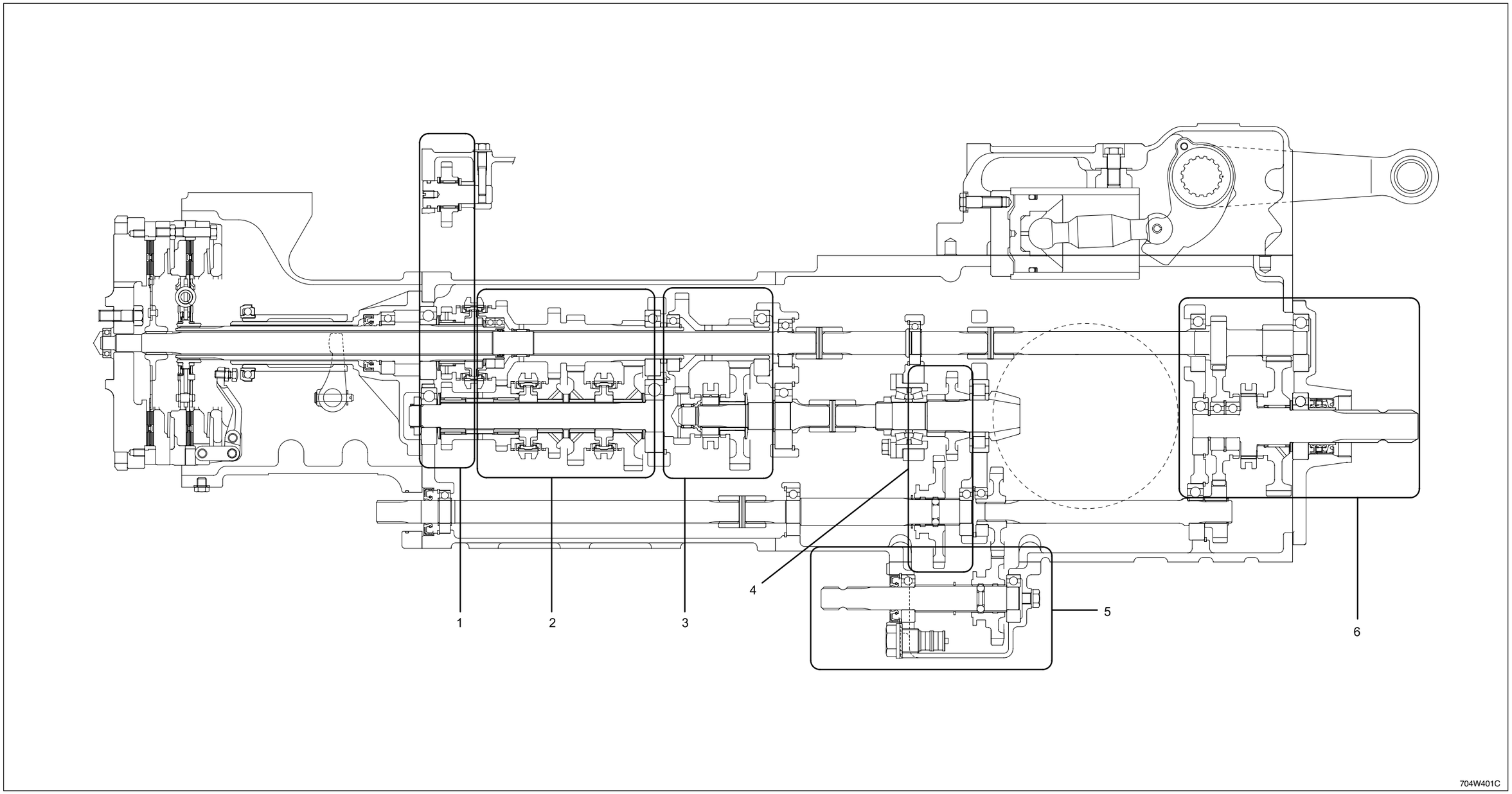

(1) Shuttle Shift Section
(2) Main Gear Shift Section
(3) Range Gear Shift Section
(4) Front Wheel Drive Section
(5) Mid PTO Drive Section
(6) Rear PTO Shift Section

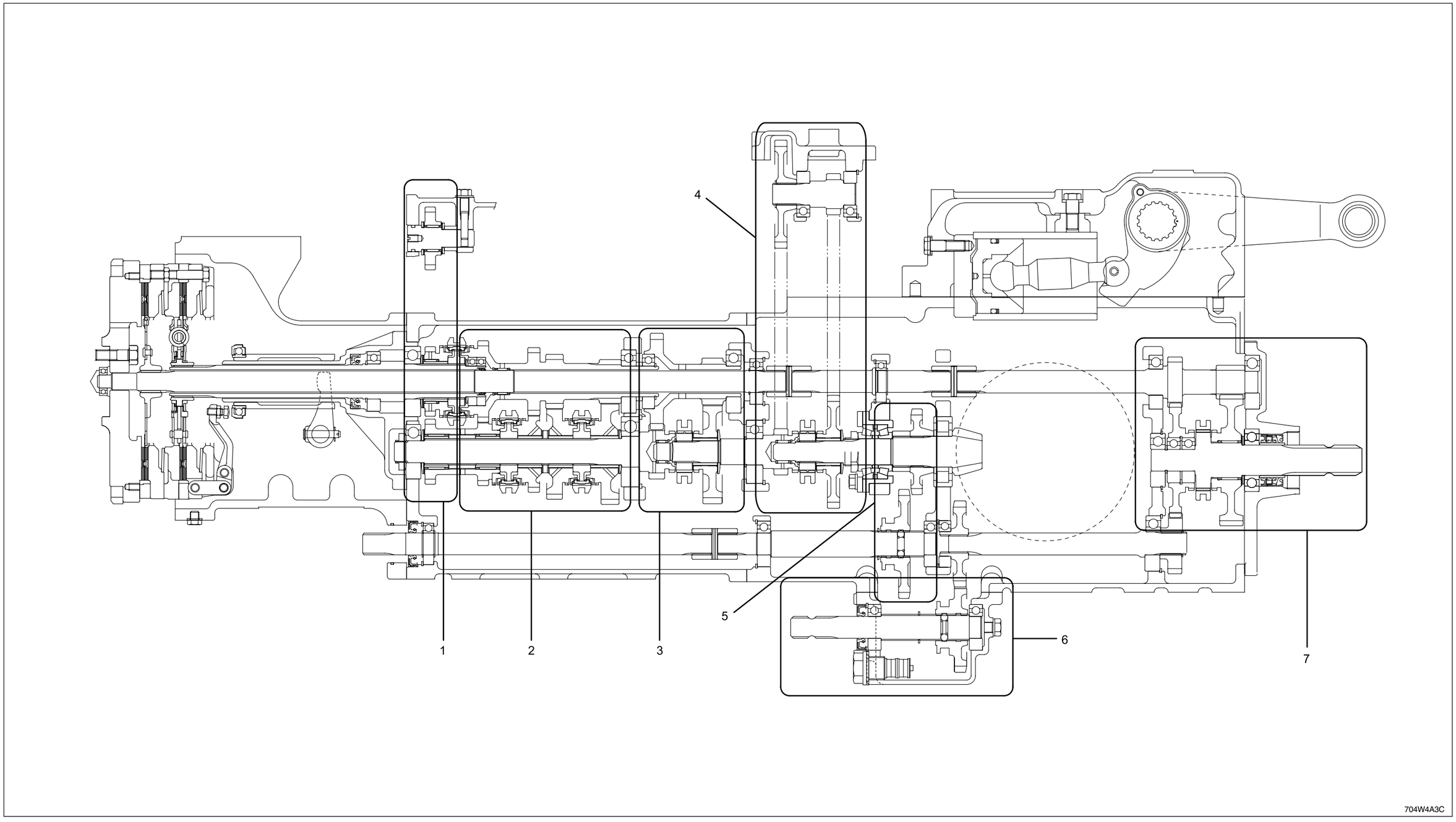

(1) Shuttle Shift Section
(2) Main Gear Shift Section
(3) Range Gear Shift Section
(4) Creep Gear Shift Section
(5) Front Wheel Drive Section
(6) Mid PTO Drive Section
(7) Rear PTO Shift Section

2.2 POWER TRAIN

The transmission consists of a series of gears and shaft as shown previously. It offers the most suitable speed for traveling and operation by combination of these gears. It transmits power to the front axle, rear axle and PTO shaft.

CK25/30/35 is equipped a transmission with 8 forwards and 8 reverses.

2.2.1 MAIN GEAR SHIFT SECTION

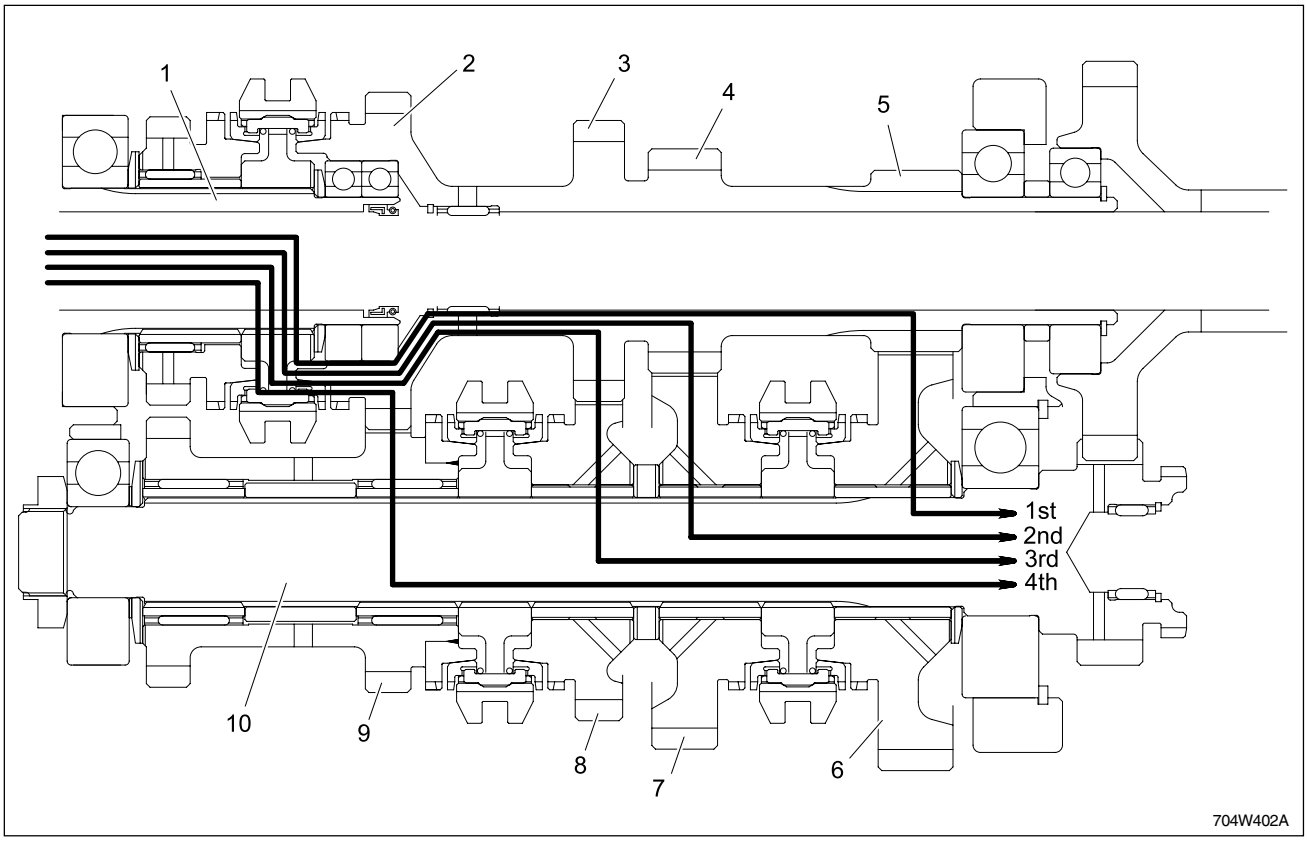

(1) Main Shaft
(2) 33 Gear
(3) 27 Gear
(4) 21 Gear
(5) 15 Gear
(6) 43 Gear
(7) 39 Gear
(8) 33 Gear
(9) 27 Gear
(10) 10 Gear Shaft

The traveling system consists of main gear shift section, reverse gear shift section, and a high-low range shift section.

The main shift section used a synchro-mesh.

Rotary power is transmitted from engine to the gear shaft through a tie.

The clutch can be changed four ways by the main shift lever, and transmits to the counter shaft.

A. THE POWER IS TRANSMITTED AS FOLLOWS

▶ **1ST SPEED**

Main shaft (1) → 16 gear (5) → 43 gear (6) → 18 Gear Shaft (10)

▶ **2ND SPEED**

Main shaft (1) → 21 gear (4) → 39 gear (7) → 18 Gear shaft (10)

▶ **3RD SPEED**

Main shaft (1) → 27 gear (3) → 33 gear (8) → 18 Gear shaft (10)

▶ **4TH SPEED**

Main shaft (1) → 33 gear (2) → 27 gear (9) → 18 Gear shaft (10)

2.2.2 SYNCHRO OPERATION

A. 1ST STAGE

- When shifting the main transmission shift lever, the shifter (3) and key (2) are moved. The end of the key contacts the cone of the gear (6) and the synchronizer ring (5) is pushed.
- The friction power from the cone of the synchronizer key (2), and synchro hub (1), rotates in a body.

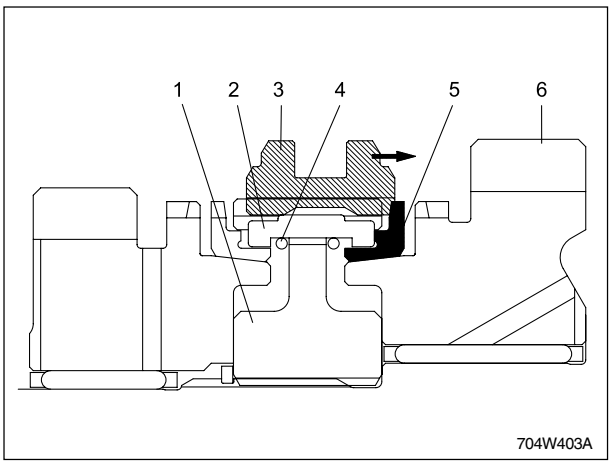

(1) Synchro Hub
(2) Synchronizer Key
(3) Shifter
(4) Synchronizer Spring
(5) Synchronize Ring
(6) Gear

B. INTERMEDIATE STAGE

- When the synchronizer key (2) is not slipped any longer by the synchronizer ring (5), it will tall from the shifter (3) and key will enter the groove of the synchronizer ring.
- Synchronizer key, shifter, and synchro hub (1) start to rotate. The Synchronizer ring and gear (6), rotate simultaneously by tightening the chamfering of the shift and synchronizer ring.

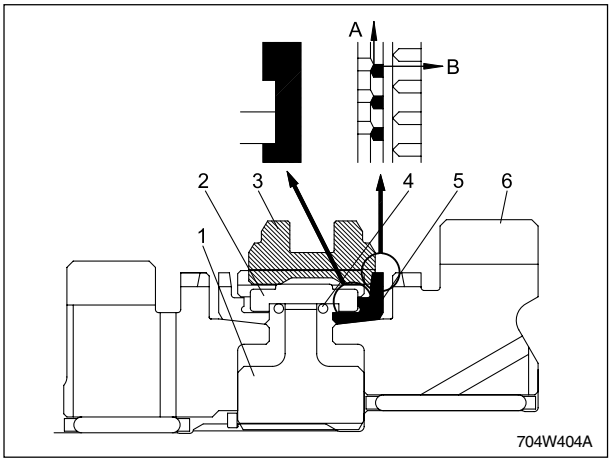

(A) Rotating Force
(1) Synchro Hub
(2) Synchronizer Key
(3) Shifter
(B) Force to Shift
(4) Synchronizer Spring
(5) Synchronize Ring
(6) Gear

C. FINAL STAGE

- When rotation speed of shifter (3) is equal with that of the gear (6), the rotation force of synchronizer ring (4), will not affect the shift any longer. The shifter, synchronizer ring, and gear (6), rotate while engaged for perfect power transmission.

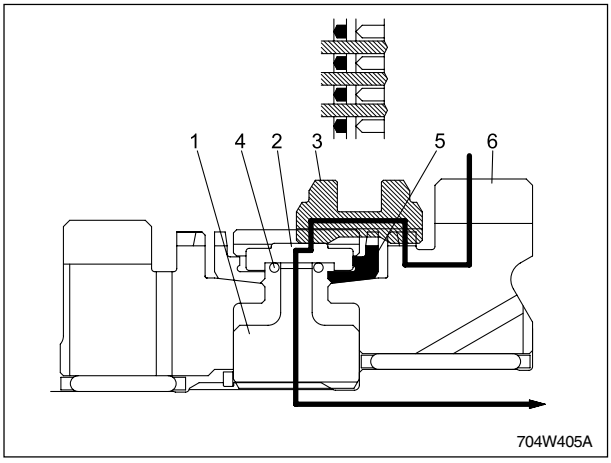

(1) Synchro Hub
(2) Synchronizer Key
(3) Shifter
(4) Synchronizer Spring
(5) Synchronize Ring
(6) Gear

2.2.3 REVERSE SHIFT SECTION

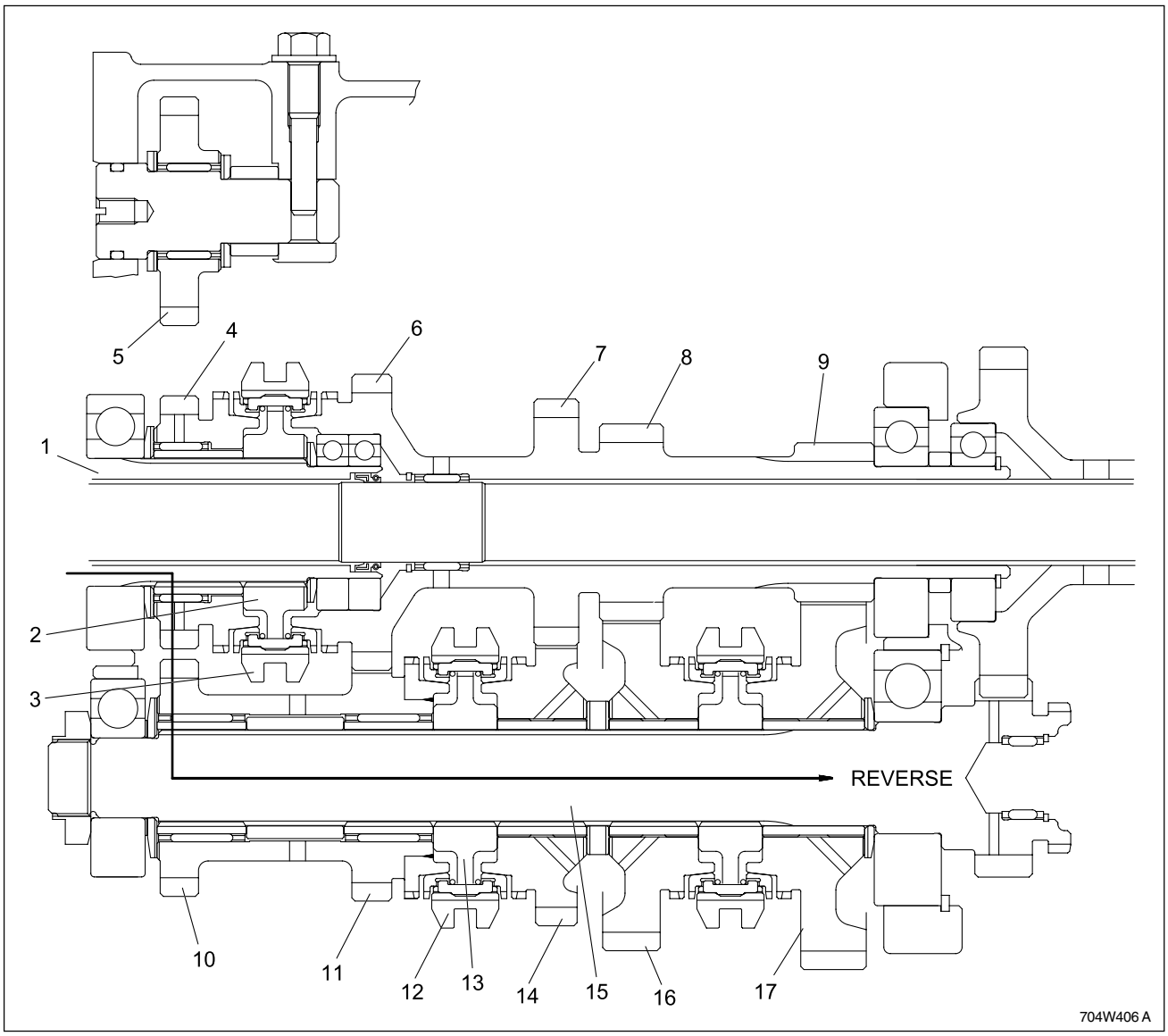

(1) Main Shaft
(2) Synchro Hub
(3) Shifter
(4) 28 Gear
(5) 25 Gear
(6) 33 Gear
(7) 27 Gear
(8) 21 Gear
(9) 15 Gear
(10) 26 Gear
(11) 27 Gear
(12) Shifter
(13) Synchro Hub
(14) 33 Gear
(15) 18 Gear Shaft
(16) 39 Gear
(17) 43 Gear

The standard 8 x 8 gear transmission (1), consists of four forward speeds and four reverse in the main transmission gearbox. A two speed range gearbox provides two speed ratios for each of the main transmission gears for a total of eight forward and eight reverse speeds.

A. REVERSE

Main shaft (1) → Synchro hub (2) → Shifter (3) → 28 gear (4) → 25 gear (5) → 26 gear (10) → 18 Gear shaft (15)

2.2.4 RANGE SHIFT SECTION (MANUAL)

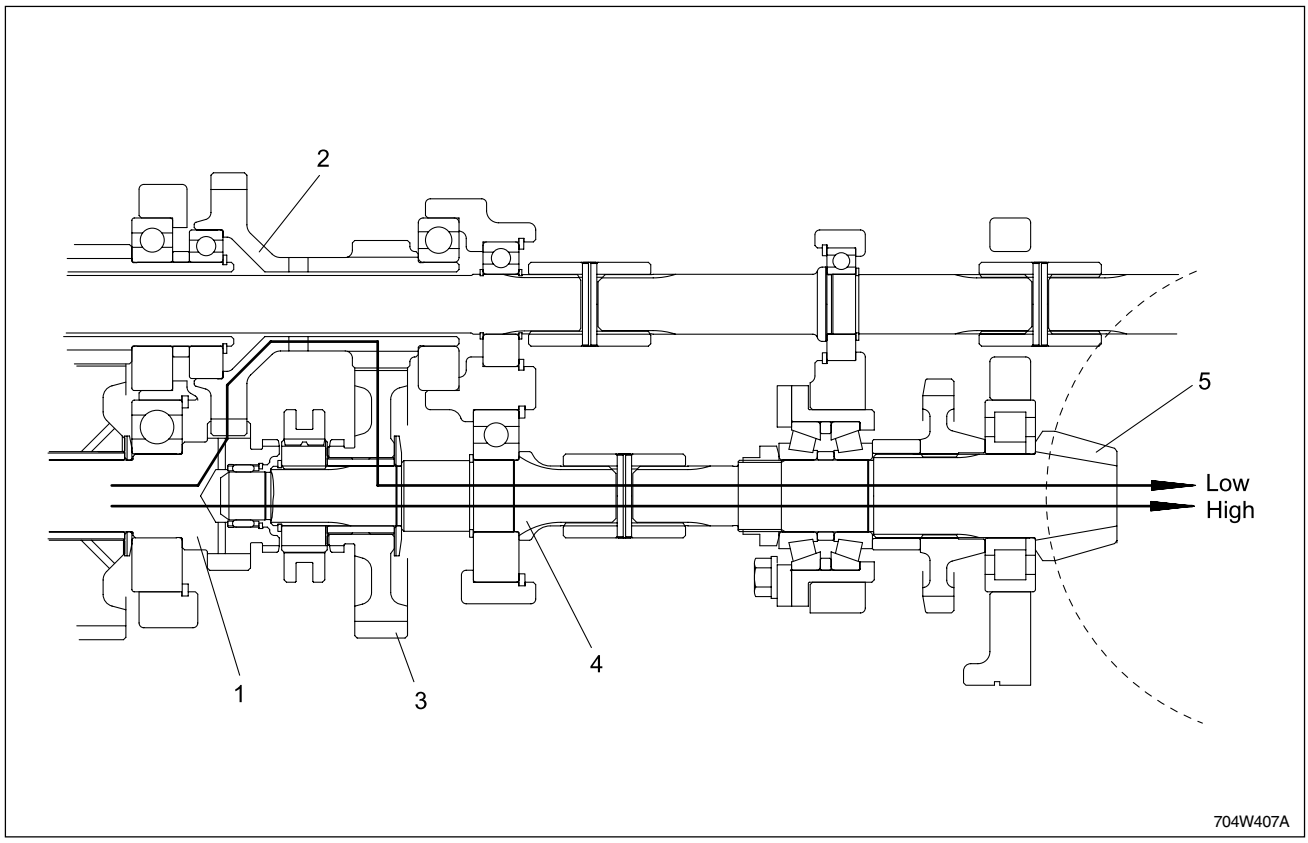

(1) 18 Gear Shaft
(2) 34-15 Gear
(3) 37 Gear
(4) Range Shift Shaft
(5) Spiral Bevel Pinion

The high/low stage employs a selective engagement method. When the high-low shift lever is set to the transmission position, the power will be transmitted.

A. HIGH SPEED

18 Gear shaft (1) → Range Shift Shaft (4) → Spiral Bevel Pinion (5)

B. LOW SPEED

18 Gear shaft (1) → 34-15 Gear (2) → 37 Gear (3) → Range Shift Shaft (4) → Spiral bevel pinion (5)

2.2.5 RANGE SHIFT SECTION (HST)

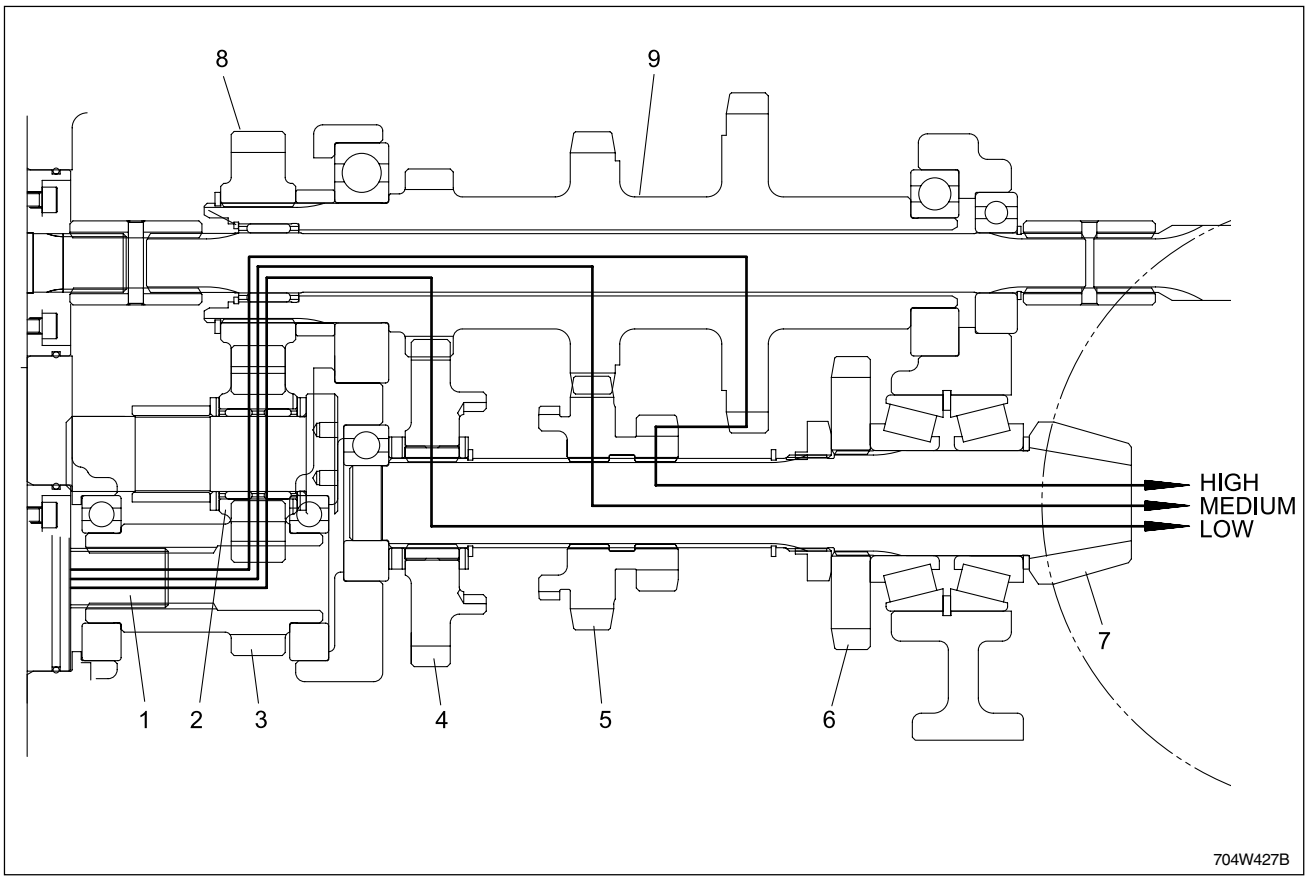

(1) HST Motor Shaft
(2) 15 Gear
(3) 22 Gear
(4) 27 Gear
(5) Range Shift Shaft
(6) 18 Gear
(7) 36 Gear
(8) 34 Gear
(9) 17-26-30 Gear

A. HIGH SPEED

HST Motor Shaft (1) → 15 Gear (2) → 22 Gear (3) → 34 Gear (8) → 17-26-30 Gear (9) → 27 Gear (4) → Range Shift Shaft (5) → 36 Gear (7)

B. MIDIUM SPEED

HST Motor Shaft (1) → 15 Gear (2) → 22 Gear (3) → 34 Gear (8) → 17-26-30 Gear (9) → Range Shift Shaft (5) → 36 Gear (7)

C. LOW SPEED

HST Motor Shaft (1) → 15 Gear (2) → 22 Gear (3) → 34 Gear (8) → 17-26-30 Gear (9) → 27 Gear (4) → 36 Gear (7)

2.2.6 CREEP GEAR SHIFT SECTION (OPTION)

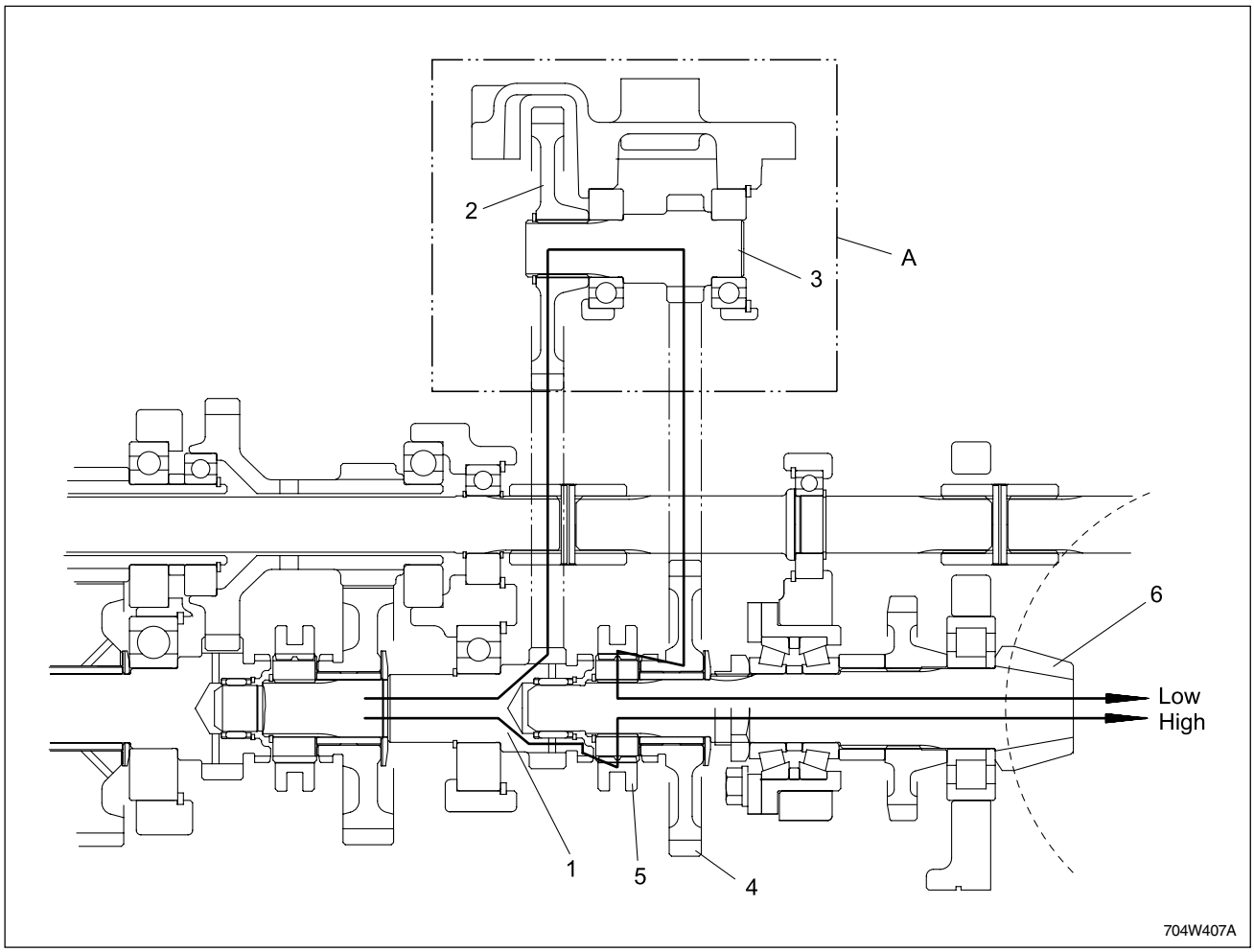

(1) 15 Gear Shaft
(2) 39 Gear
(3) 13 Gear
(4) 41 Gear
(5) Shifter
(6) Spiral Bevel Pinion
(A) Creep Kit Option

The High/Low stage employs a gear engagement method. When the range shift lever and creep shift lever is set to the transmission position, the power will be tranmitted.

A. HIGH SPEED

15 Gear shaft (1) → Shifter (5) → Spiral Bevel Pinion (6)

B. LOW SPEED

15 Gear shaft (1) → 39 Gear (2) → 13 Gear (3) → 41 Gear (4)→ Shifter (5) → Spiral bevel pinion (6)

2.2.7 FRONT WHEEL DRIVE SECTION

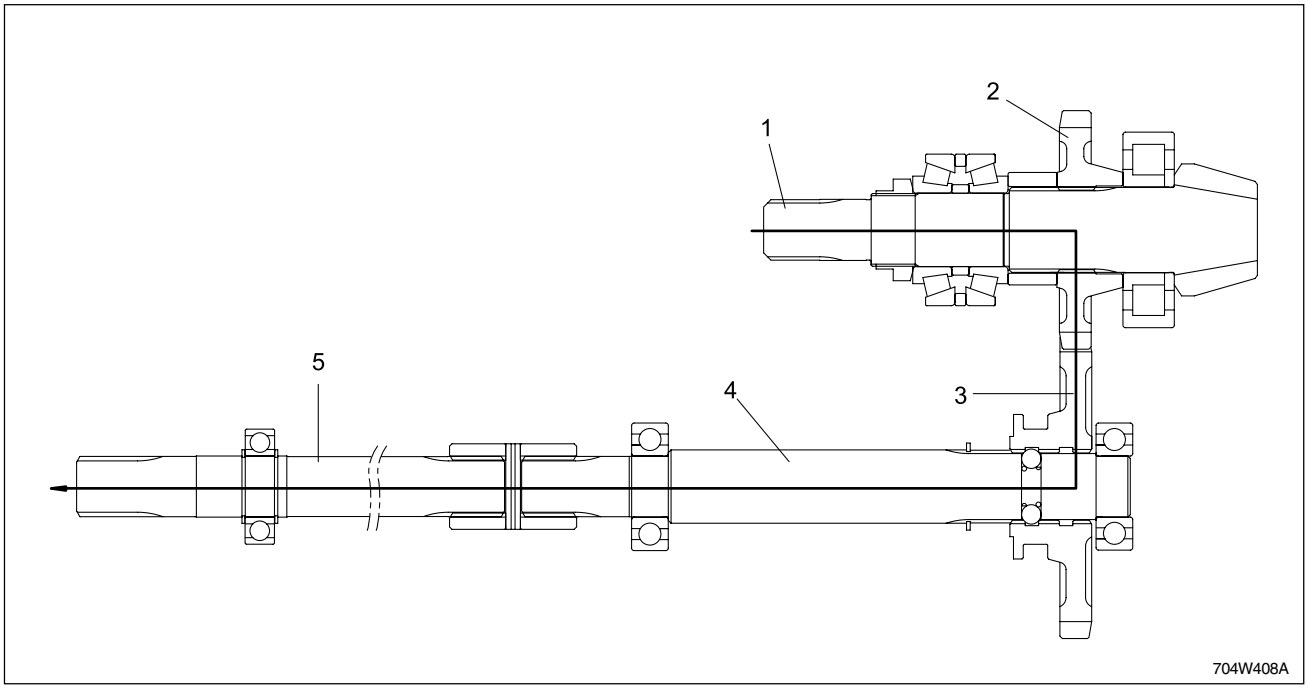

(1) Spiral Bevel Pinion
(2) 30 Gear
(3) 39 Gear (Shift Gear)
(4) Front Wheel Drive Shifter (1)
(5) Front Weel Drive Shaft (2)

Four wheel drive or two wheel drive is selected by operating the front wheel drive lever to shift the shift Gear (3).

When the front wheel drive lever is set to disengaged, the front wheel gear is in neutral and power is not transmitted to the front wheel drive shaft 1 (4).

When the front wheel drive lever is set to engaged, the front wheel shifter (3) splined with the front wheel drive shaft 1 (4) slides to the right side to engage with the 30 Gear (2).

A. FRONT WHEEL DRIVE ENGAGEMENT

Spiral Bevel Pinion (1) → 30 Gear (2) → 39 Gear (3) → Front wheel drive shaft 1 (4) → Front wheel drive shaft 2 (5).

2.3 TRANSMISSION SHIFT LINKAGE STRUCTURE

2.3.1 MAIN GEAR SHIFT LEVER

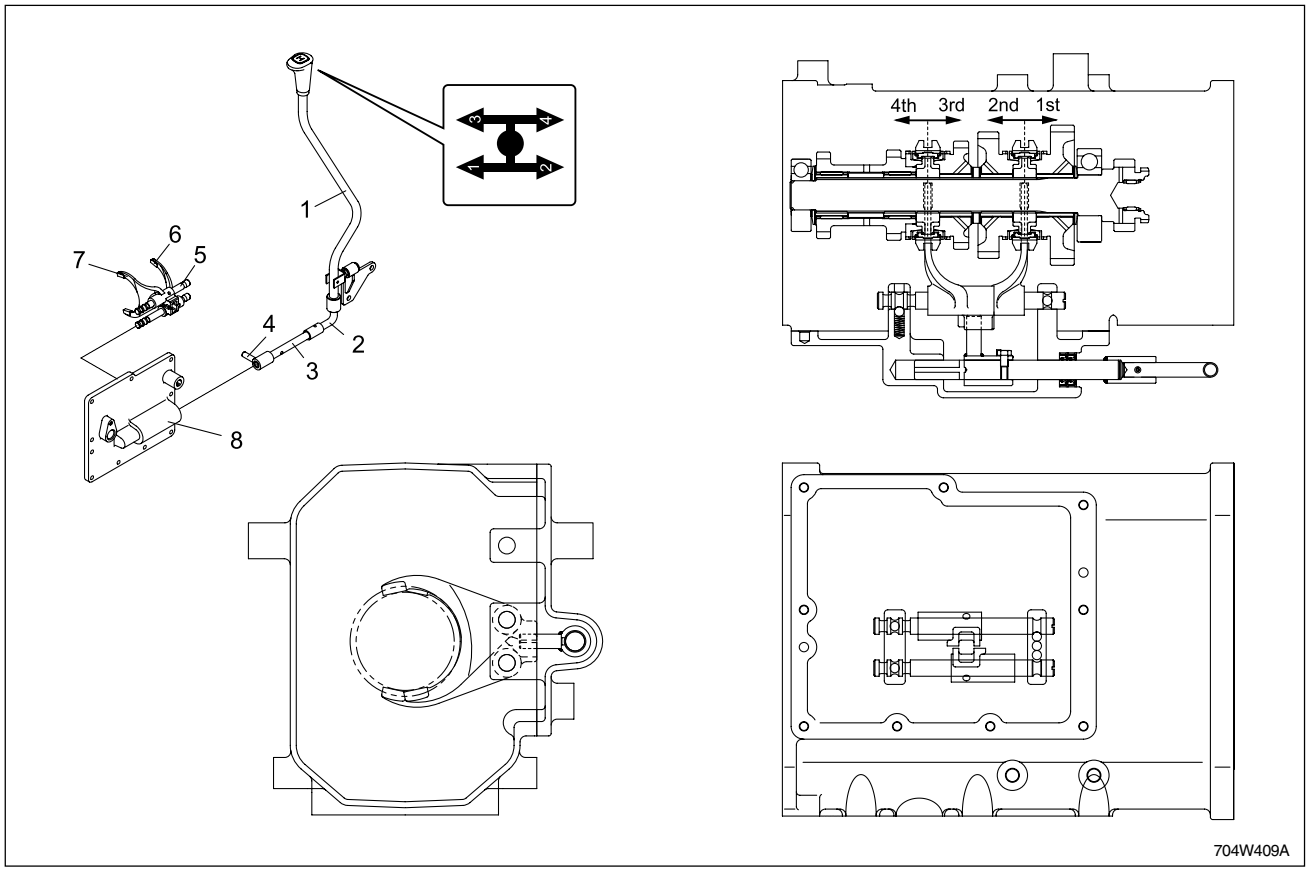

(1) Main Shift Lever
(2) Main Shift Rod 2
(3) Shift Rod (Main)
(4) Shift Arm
(5) Fork Rod (Main Shift)
(6) Main Shift Fork (1,2)
(7) Main Shift Fork (3,4)
(8) Main Shift Cover

- The transmission shift lever is located to the left of driver's seat. It is connected to shift arm (4), shift fork (6) and shift fork (7).
- One transmission shift lever enable from 1st to 3rd stage and easy to operate.
- If the transmission shift lever is moved left, main shift arm (4) will be engaged with main shift fork 1 (6) in 1st stage and 2nd stage.

  If the lever is moved to front or rear, then the 1st and 2nd transmission shift will be enabled.
- If the transmission shift lever is moved right, the transmission arm will be engaged with transmission fork (7) in 3rd and 4th stage.

  If the lever is moved front or rear, the 3rd and 4th transmission shift will be enabled.

2.3.2 SHUTTLE SHIFT LEVER

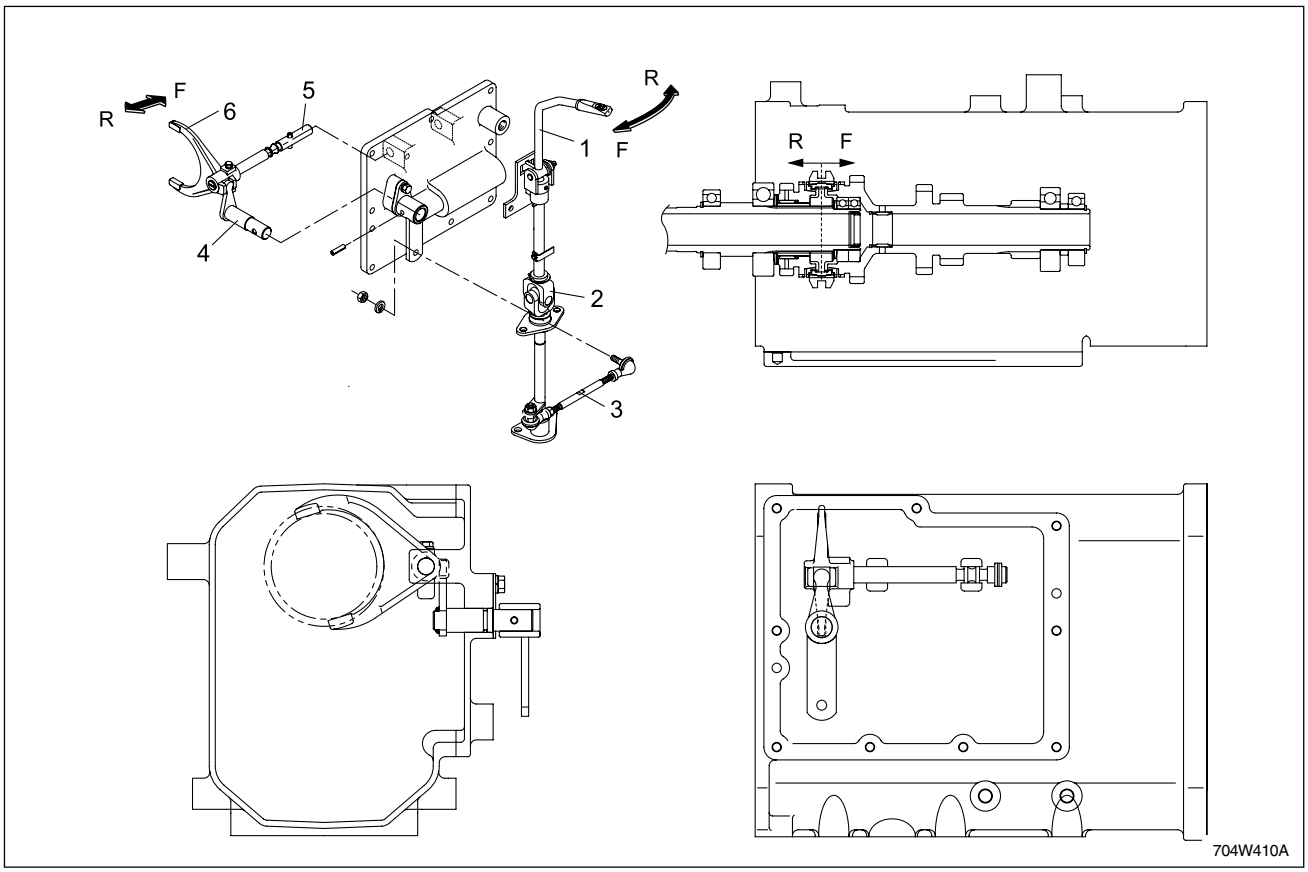

(1) Shuttle Lever
(2) Universal Joint
(3) Rod (Shuttle)
(F) Forward
(4) Shift Arm (Shuttle)
(5) Shift Rod (Shuttle)
(6) Shift Fork (Shuttle)
(R) Reverse

- Shuttle lever (1) is located to the left of the steering wheel. It is connected to the universal joint (2), rod (3), shift arm (4), fork rod (5), and shift fork (6).
- If pushing shuttle lever, “Forward” shift will be done and if pulling it, “Reverse” done.

2.3.3 RANGE SHIFT LEVER (MANUAL)

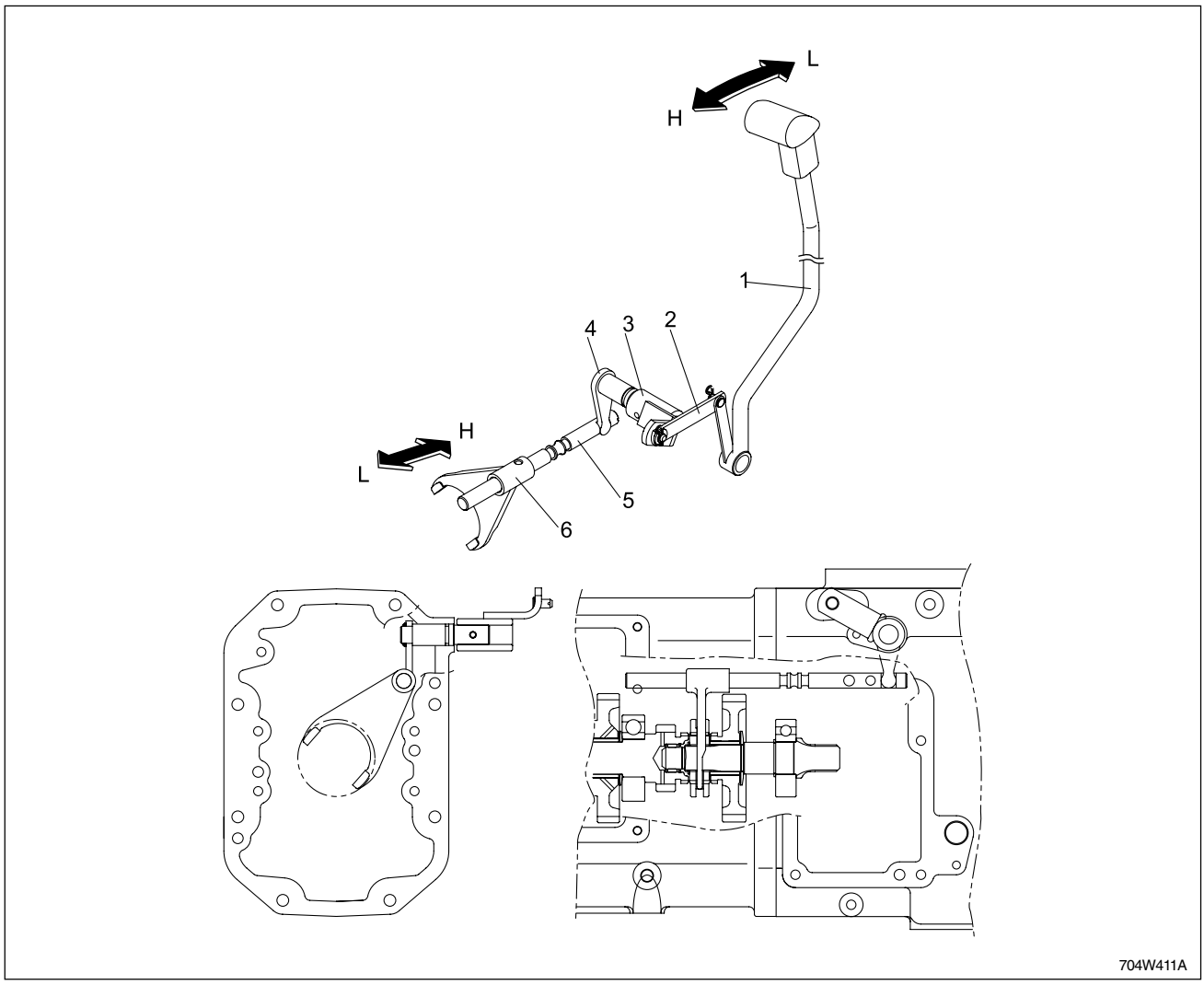

(1) Range Shift Lever
(2) Range Shift Rod
(3) Range Shift Connecting Arm
(4) Shuttle Shift Arm
(5) Range Fork Rod
(6) Range Shift Fork

(L) Low
(H) High

- Auxliary transmission shift lever (1) is located towards the left of the driver's seat and is connected to the Hi-Lo shift rod (2), Hi-Lo shift connecting arm (3), shift rod (5) and shift fork (6).
- If you push the Hi-Lo shift lever forward, “High speed” transmission shift will be done and if pulling backward, “Low speed” transmission shift will be done.

2.3.4 RANGE SHIFT LEVER (HST)

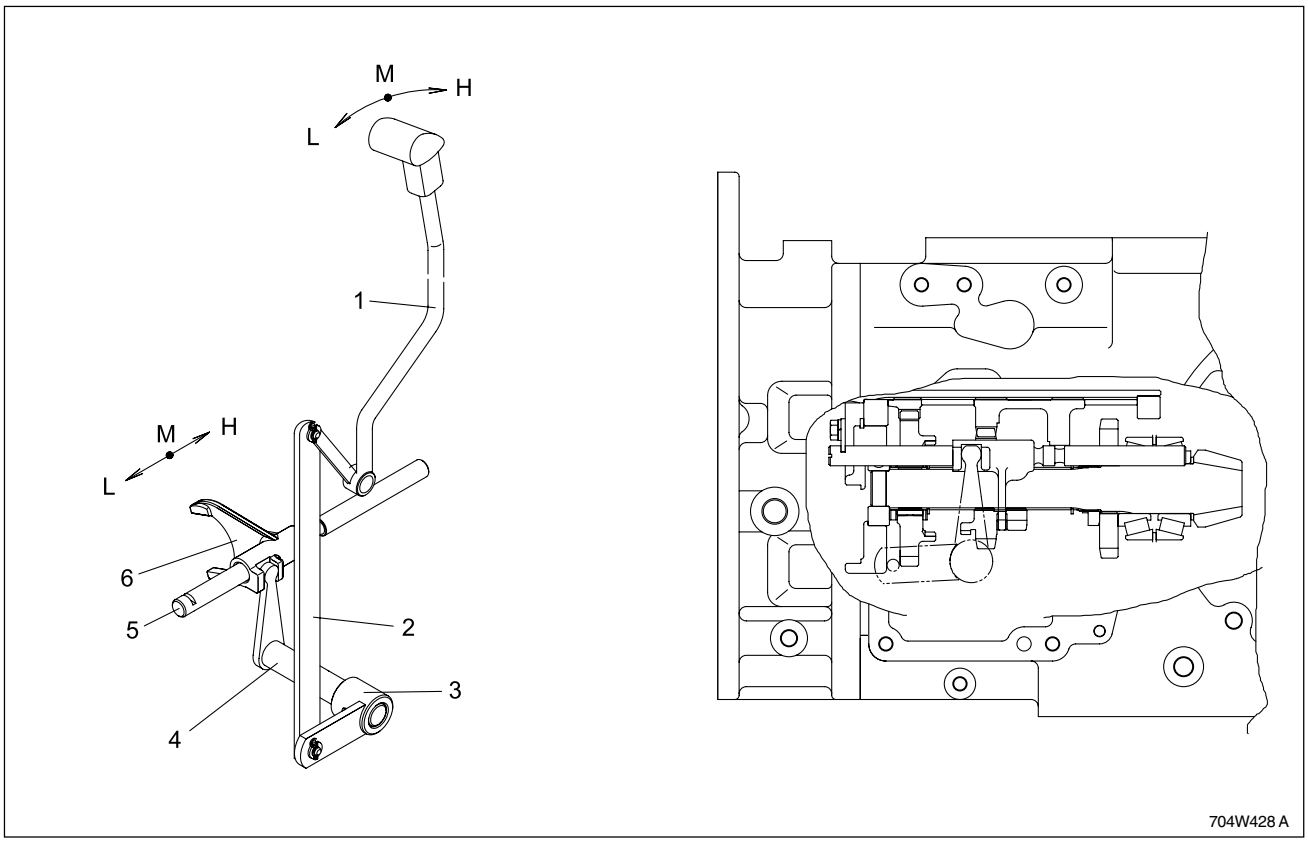

(1) Range Shift Lever
(2) Range Shift Plate
(3) Range Shift Arm
(4) Shift Arm
(5) Fork Rod
(6) Range Shift Fork
(H) High
(M) Medium
(L) Low

- Auxiliary transmission shift lever (1) is located towards the left of the driver's seat and is connected to the Hi-Lo shift rod (2), Hi-Lo shift connecting arm (3), shift rod (5) and shift fork (6).
- If you push the Hi-Lo shift lever forward, (Low speed) transmission shift will be done and if pulling backward, (High speed) transmission shift will be done. And between (High speed) position and (Low speed), there are (Medium speed) position.

2.3.5 CREEP SHIFT LEVER(OPTION)

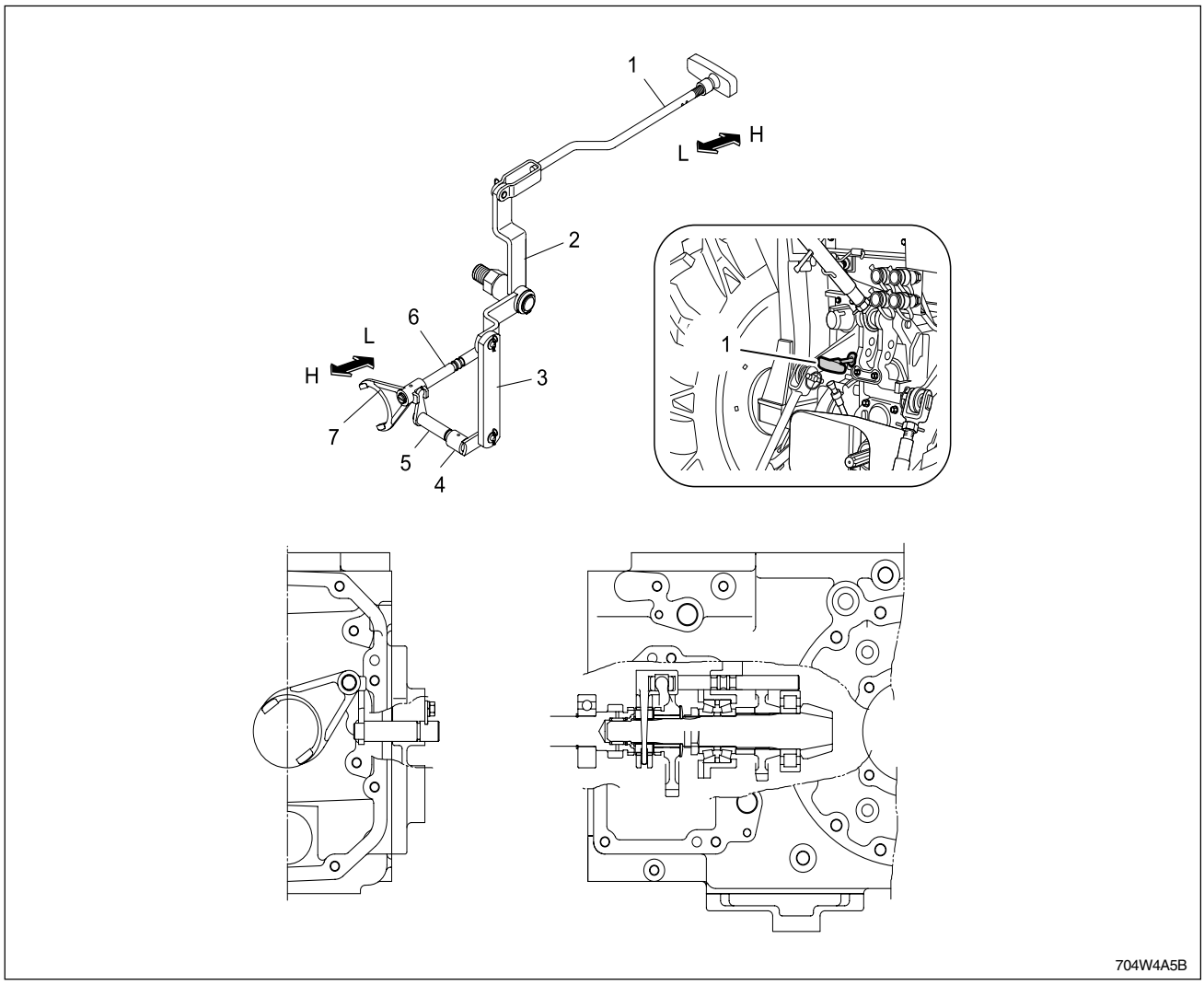

(1) Creep Shift Lever
(2) Creep Arm
(3) Connecting Plate
(4) Creep Connecting Arm
(5) Creep Shift Arm
(6) Creep Fork Rod
(7) Creep Shift Fork

(L) Low
(H) High

- Creep shift lever (1) is located towards the left of the hydraulic lift cylinder and is connected to the Creep Arm (2), Connecting Plate (3), Creep Connecting Arm (4), Creep Shift Arm (5), Creep Fork Rod (6) and shift fork (7).
- If you pull the creep shift lever backward, [High speed] transmission shift will be done and if pushing forward, [Low speed] transmission shift will be done.

2.3.6 FRONT WHEEL DRIVE SHIFT

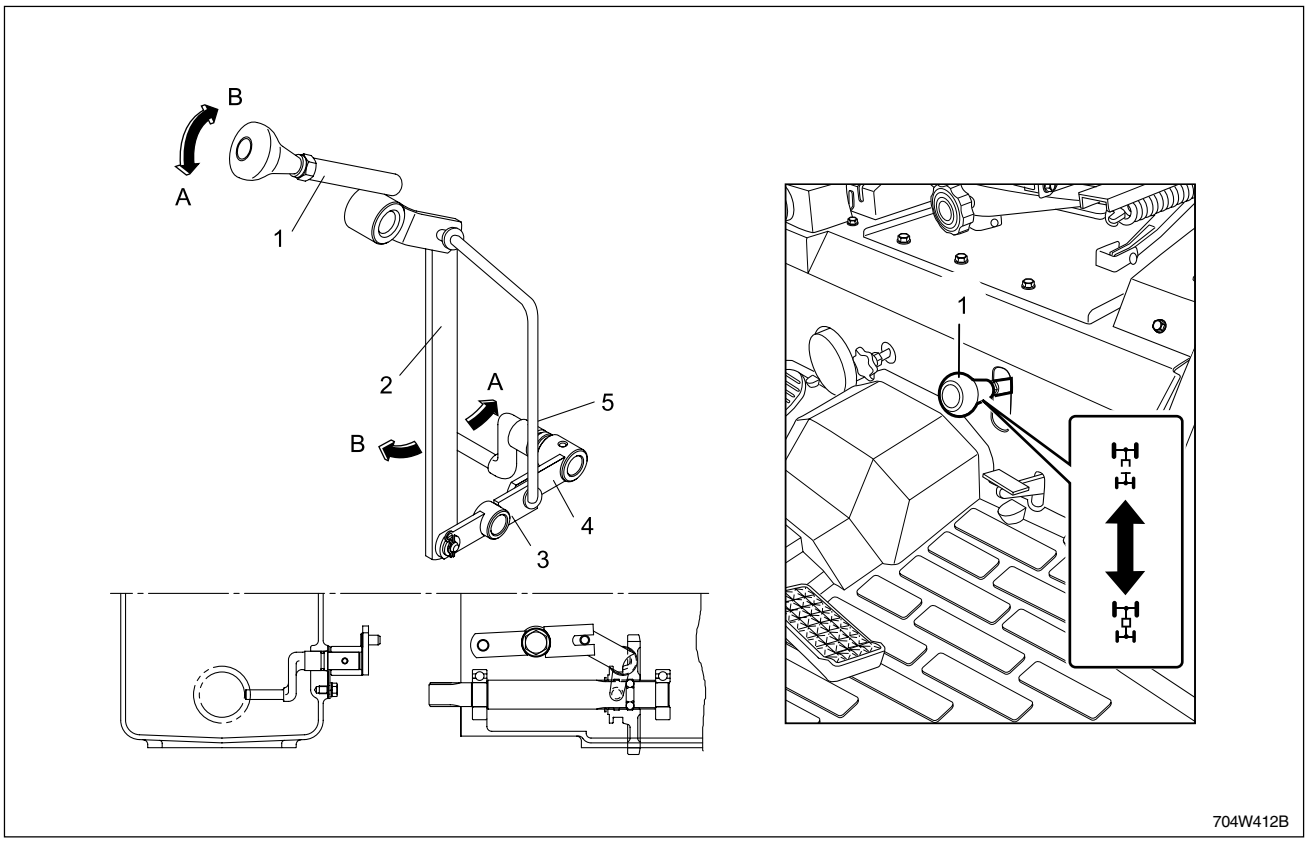

(1) Front Wheel Drive Lever
(2) Front Wheel Rod
(3) Front Wheel Drive Link 1
(4) Front Wheel Drive Shift Arm
(5) Engaged
(6) Disengaged

- The front wheel drive lever (1) is located at left lower position of the driver's seat. It is connected to front wheel drive rod (2), fornt wheel drive link 2 (3), fornt wheel drive link 1 (4) and shift arm (5).
- If pushing front wheel drive lever (1), it will be set to "engagement" and if pulling upward, set to "disengagement".

2.4 PTO SECTION

2.4.1 POWER TRAIN DIAGRAM

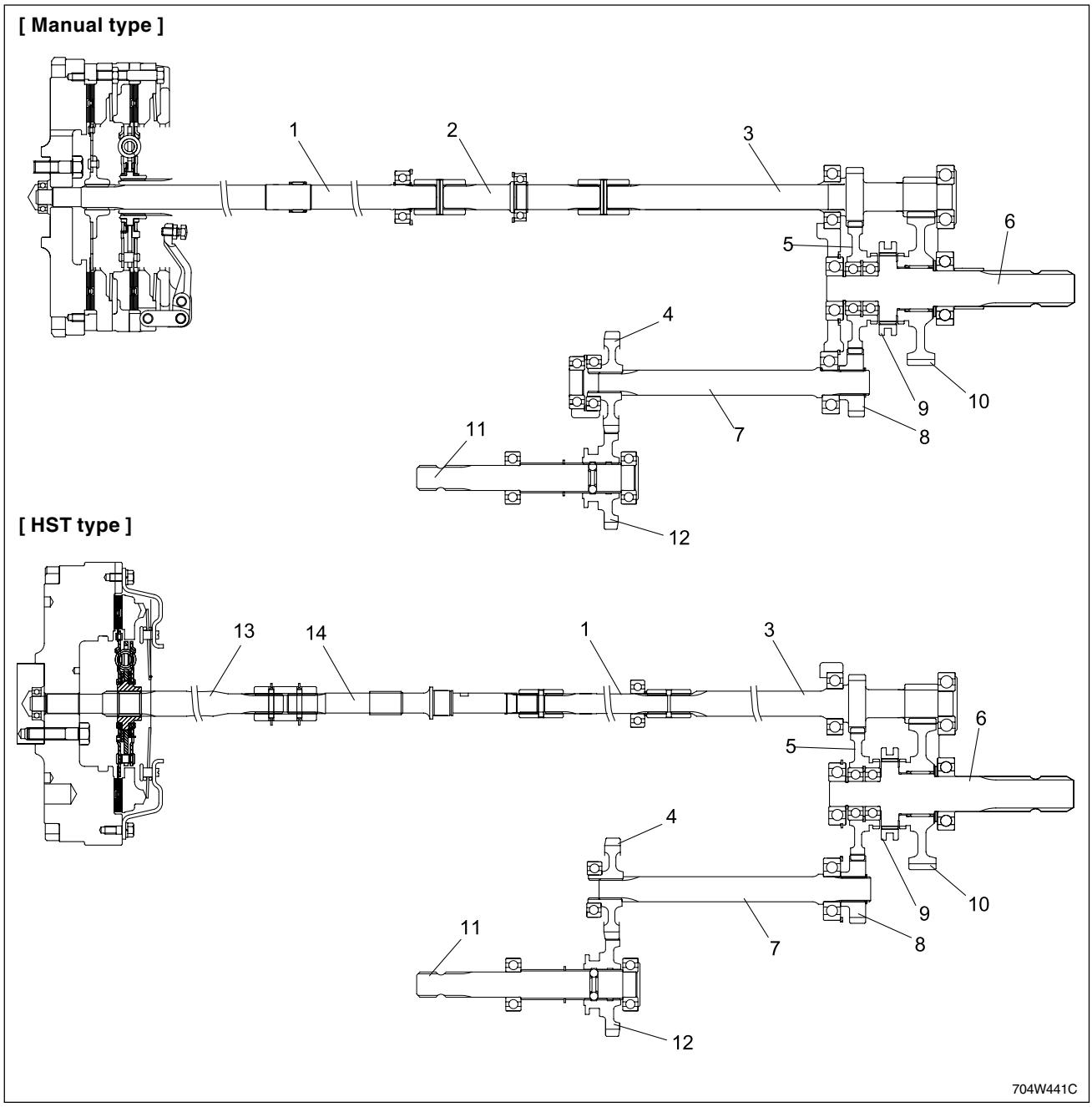

(1) PTO Drive Shaft 1
(2) PTO Drive Shaft 2
(3) PTO Drive Shaft
(4) 31 Gear
(5) 48 Gear
(6) PTO Shaft
(7) Mid PTO Counter Shaft
(8) 23 Gear
(9) Shifter
(10) 56 Gear
(11) Mid PTO Shaft
(12) 32 Gear
(13) Main Shaft
(14) HST Shaft

2.4.2 PTO POWER TRAIN

A. MID PTO (OPTION)

The power can be taken out from the mid case by installing the mid PTO system.

▶ MID PTO ENGAGEMENT

PTO drive shaft (1) → 48 Gear (2) → 23 Gear (3) → Mid PTO Counter shaft (4) → 31 Gear (5) → 32 Gear (6) → Mid PTO shaft (7)

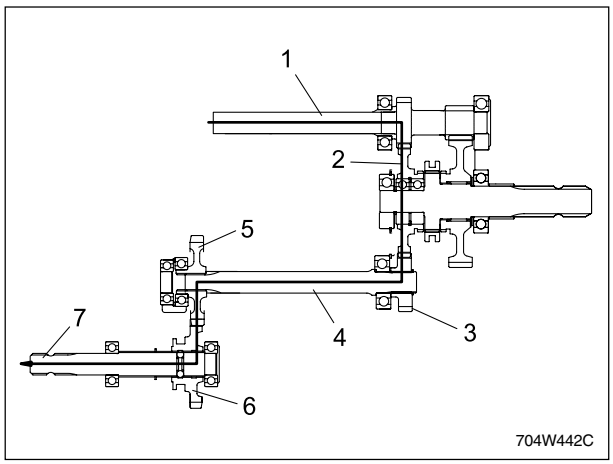

(1) PTO Drive Shaft
(2) 48 Gear
(3) 23 Gear
(4) Mid PTO Counter shaft
(5) 31 Gear
(6) 32 Gear
(7) Mid PTO Shaft

B. REAR PTO

The power can be outputted directly from the engine through the clutch. Refer to the figure.

▶ HIGH SPEED

PTO drive shaft (1) → 48 Gear (2) → PTO shaft (6)

▶ LOW SPEED

PTO drive shaft (1) → 56 Gear (5) → PTO shaft (6)

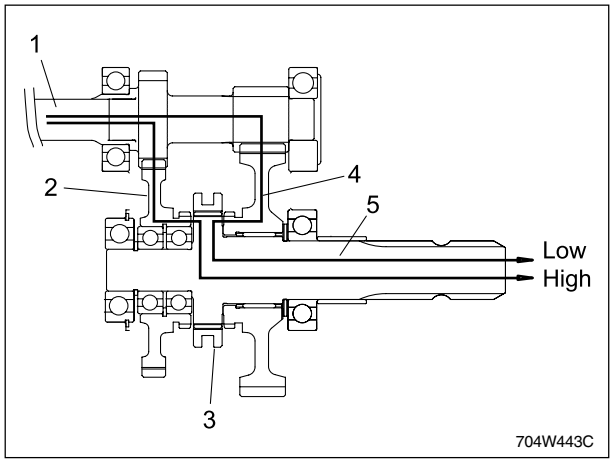

(1) PTO Drive Shaft
(2) 48 Gear
(3) Shifter
(4) 56 Gear
(5) PTO Shaft

2.4.3 PTO SHIFT LINKAGE

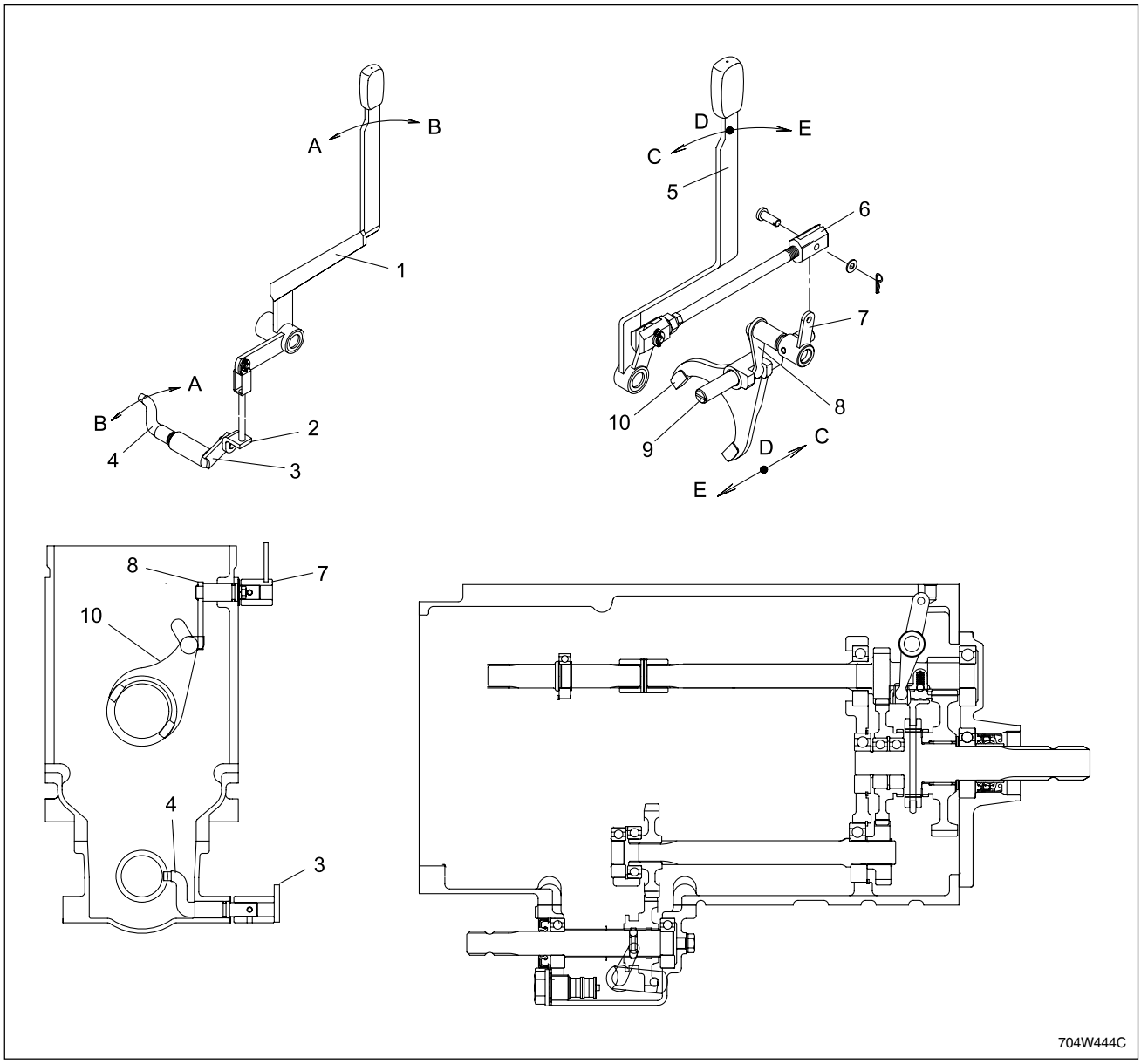

(1) Mid PTO Lever
(2) Mid PTO Connecting Rod
(3) Mid PTO Lever 1
(4) Mid PTO Shift Arm
(5) Rear PTO Lever
(6) Rear PTO Connecting Rod
(7) Rear PTO Connecting Arm
(8) Rear PTO Shift Arm
(9) Rear PTO Fork Rod
(10) Rear PTO Shift Fork

(A) Engaged (B) Disengaged (C) Low (D) Neutral (E) High

A. MID PTO SHIFT

- The mid PTO lever (1) is located to the left of the driver's seat. It is connected to the mid PTO connecting rod (2), mid PTO lever 1 (3), and the shift arm (4).
- When the mid PTO lever is pushed forward, it will be set to "Engagement" and if it is pulled backward, it will be set to "Disengagement".

B. PTO SHIFT

- The PTO lever (5) is located at left side of driver's seat and is connected to connecting rod (6), PTO shift arm (8), fork rod (9), and shift fork (10).
- If you push the PTO lever (5) forward, a "Low speed" shift will be done. If you push it backward, a "Neutral" shift will be done.Ifit is pulled backward one more time, a "High" shift will be done.

2.5 DIFFERENTIAL GEAR

2.5.1 STRUCTURE

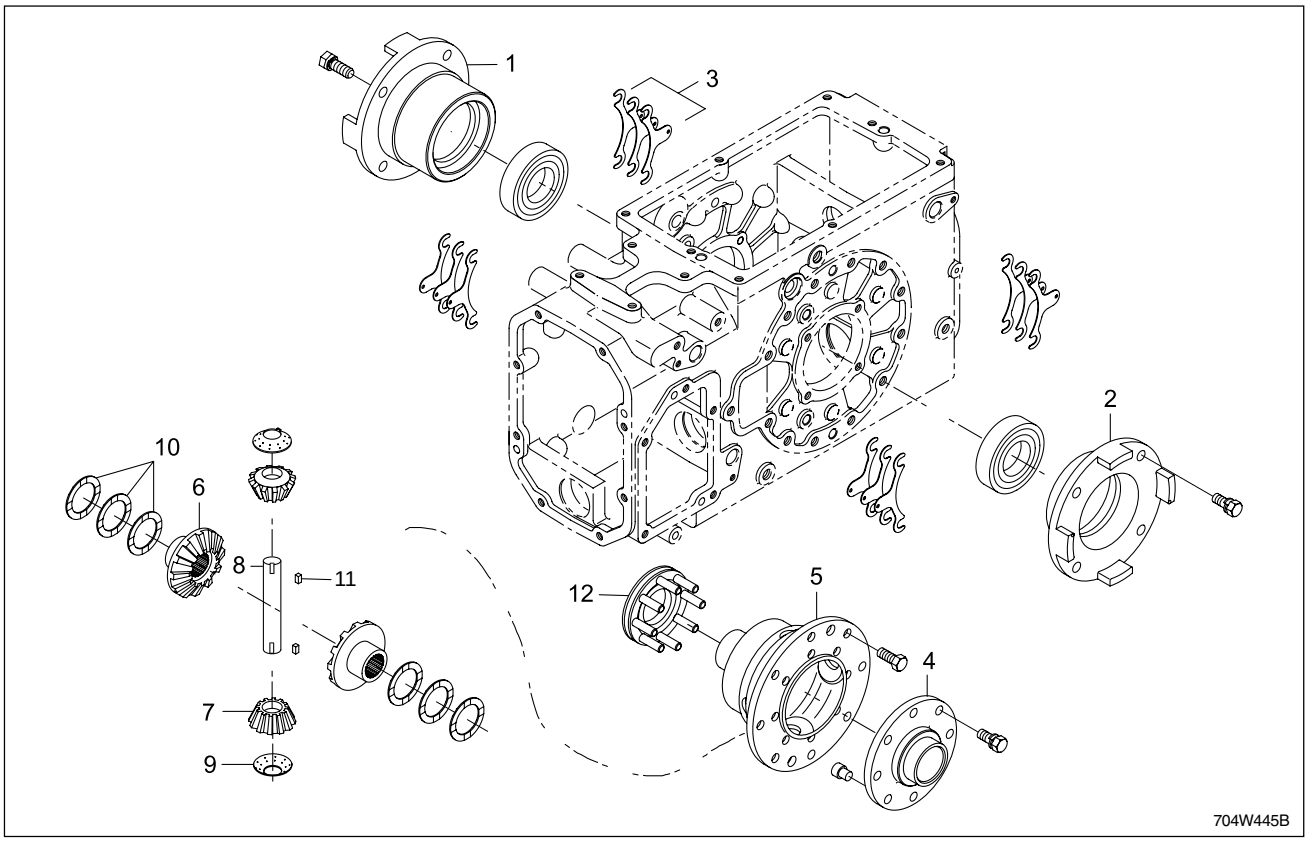

(1) Bearing Case (LH)
(2) Bearing Case (RH)
(3) Shim
(4) Differential Cover
(5) Differential Case
(6) Differential Side Gear
(7) Differential Pinion
(8) Differential Shaft 1
(9) Differential Pinion Washer
(10) Differential Washer
(11) Key
(12) Differential Lock

- The differential gear assembly is a mechanism to provide smooth steering. It automatically provides different torques to the right and left wheels according to the road resistance and braking friction at the wheels.
- The differential gear assembly is composed of the differential case (5), differential pinions (7), differential side gears (6), differential pinion shaft (8), etc.

2.5.2 PRINCIPLE OF DIFFERENTIAL SYSTEM

If two racks with same weight are set between the pinion as shown in the figure (A) and the pinion is lifted by pulling up the string attached to it as shown in the figure (B), the pinion does not rotate and the pinion and both racks are lifted in the same height (H).

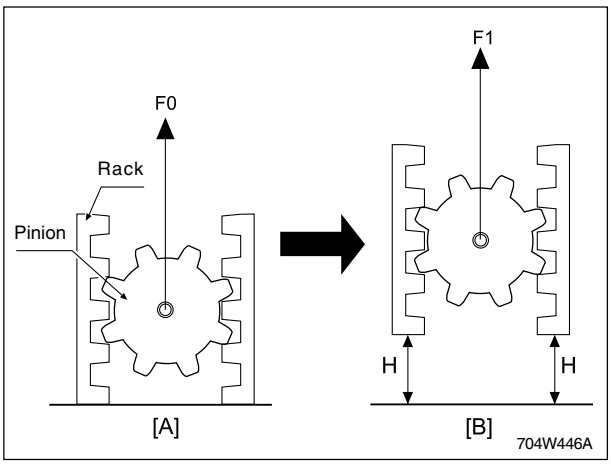

However, if putting a weight only on one rack and lifting the pinion, the pinion rises as it rotates as shown in the figure (C). The rack with a weight keeps its position and the other rack without a weight rises in the amount of the height that the pinion moves and the pinion pushes up the rack. Therefore, this rack rises in double amount of the height that the pinion moves (2H).

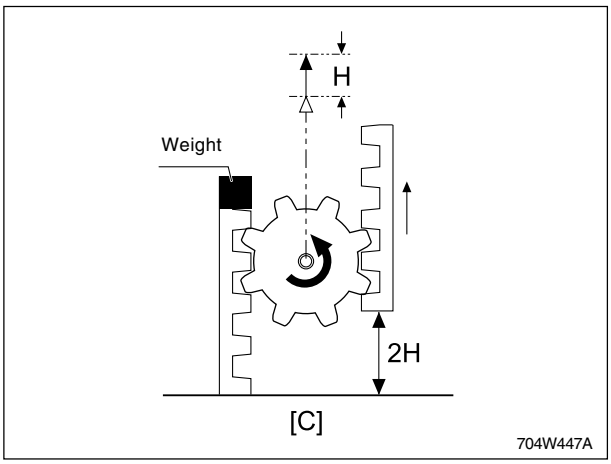

In this case, both racks refer to the differential side gears and the pinion refers to the differential pinion. Also, the force that pulls up the pinion is the rotating force of the ring gear.

If the tractor moves forward and the loads on the both wheels are same, the differential pinion (3) idles with the differential case (4) to run the differential side gear (5). In this case, the rotating speed of the ring gear (1), differential case (4) and the both side gears (5) is same.

When cornering, the load applied to the both differential side gears are different since the outer wheels should rotate faster than the inner wheels. Therefore, the differential pinion rotates and idles simultaneously to operate the side gear with low load faster and the side gear with high load slower for comfort cornering.

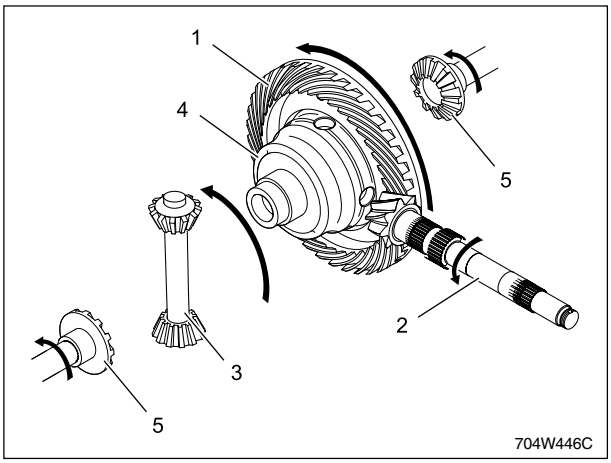

However, if the wheels on one side are on the slippery road, the load difference between both differential side gears remarkably increases and the self-rotating speed of differential pinion (3) considerably increases too. Therefore, the side gear (5) with very low load rotates at twice the speed and the side gear (6) with comparatively high load does not rotate at all. In other words, it is not possible to escape the pit since the wheel on ice with no friction rotates at twice the speed and the wheel on road with friction does not rotate.

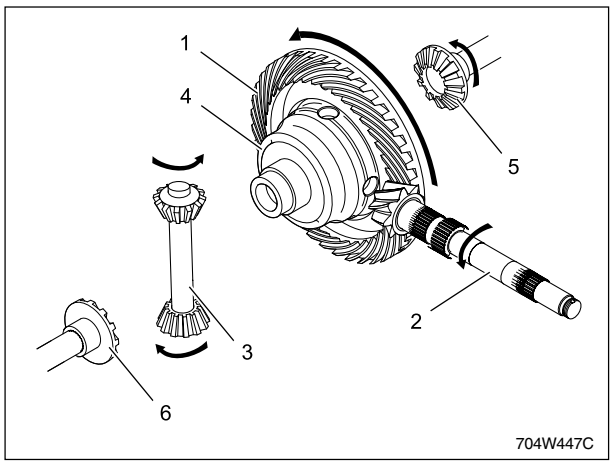

2.5.3 DIFFERENTIAL LOCK SYSTEM

When the resistance of the right and left tires varies because of the ground or work conditions, it could cause the wheels to slip and one wheel will be rotating faster than the other. Therefore, towing power will be decreased. To compensate for this, the differential locking device restricts differential function and provides equal rpm's to both wheels.

If working the differential locking pedal, the differential locking fork shaft (1) will rotate and the differential locking fork (2) will move to the differential side gear (5) with differential locking shift (3). The pin of the shift will enter the groove of the side gear to lock the side gear. Rotation of the spiral bevel gear (8) will be transmitted to both wheels to move the tractor forward.

If stopping differential locking pedal, differential locking shift (3) will be removed from side gear by the return spring of the differential locking pedal to release the locking and to return differential function.

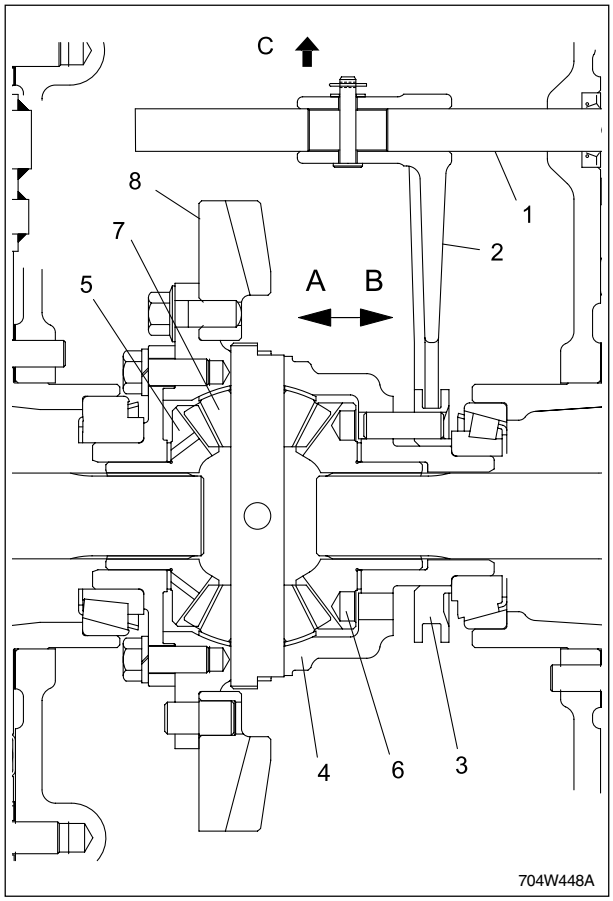

(1) Differential Fork Shaft
(2) Differential Lock Fork
(3) Differential Lock
(4) Differential Case
(5) Differential Side Gear (LH)
(6) Differential Side Gear (LH)
(7) Differential Pinion
(8) Spiral Bevel Gear

(A) Engaged (B) Disengaged (C) Front

3. TROUBLESHOOTING

Symptom	Probable Cause	Solution
Noise from transmission	• Transmissiion fluid insufficient • Gear worn or backlash improper • Improper backlash between bevel pinion shaft and bevel gear • Improper backlash between differential pinion and side gear • Collarsor shims have not been installed • Bearing worn or broken • Bevel pinion shaft stakig nut improperly tightened	Replenish Replace Adjust Adjust Repair Replace Tighten
Gears slip out of mesh	• Shifter or shift fork weaken or damaged • Shift fork spring weaken or damaged • Interlock ball fallen • Synchronizer unit damaged	Replace Replace Reassemble Repair or replace
Hard shifting	• Shifter or shift fork worn or damaged • Shift fork bent • Synchronizer unit damaged	Replace Replace Repair or replace
Gear clash when shifting	• Synchronizer unit damaged • Clutch does not release	Repair or replace Adjust
Differential lock can not be set	• Differential lock fork damaged • Differential lock fork mounting joint pin damaged	Replace Replace
Differential lock pedal does not return	• Differential lock cam spring weaken or damaged • Differential shifter pin damaged	Replace Repair or replace

4. SERVICING

4.1 DISASSEMBLY AND REASSEMBLY

4.1.1 DRAINING THE TRANSMISSION FLUID

CAUTION

To avoid personal injury:

- ***Allow the engine to cool down sufficiently, oil can be hot and can burn.***

1. To drain the used oil, remove the drain plug at the bottom of the transmission case and drain the oil completely into the oil pan.
2. After draining reinstall the drain plug.
3. Fill with the new **DAEDONG** TF65 fluid up to the upper line of the gauge.

   (See “LUBRICANTS” in Maintenance Section)
4. After running the engine for a few minutes, stop it and check the oil level again; add oil to prescribed level.

Oil capacity	HST type 27 ℓ (7.13 U.S.gal.) MECH. type 30 ℓ (7.92 U.S.gal.)

IMPORTANT

- ***Do not operate the tractor immediately after changing the transmission fluid.***

  Run the engine at medium speed for a few minutes to prevent damage to the transmission.

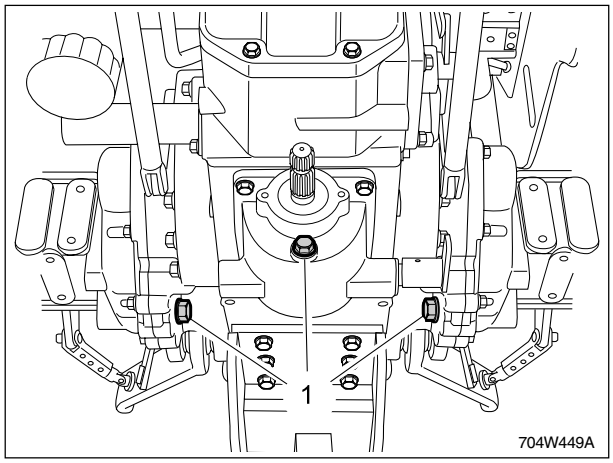

(1) Drain Plugs

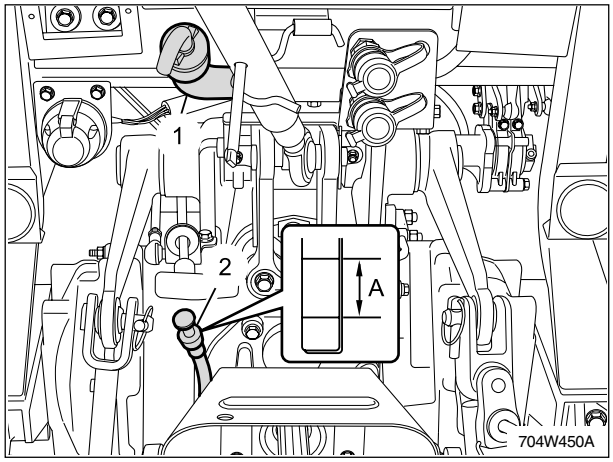

(1) Oil Filling Plug (2) Gauge

(A) Oil Level is Acceptable Within this Range

4.1.2 BONNET

1. Open the bonnet (1) and disconnect the electric connector (2).
2. Remove the air-cylinder (3).
3. Remove the snap-pin, joint-pin and bonnet(1).
4. Remove the side cover (LH/RH) (4).
5. Disconnect the battery terminal (-) (5).

NOTE:

- *When disconnecting the battery cords, disconnect the (-) cord first, when connecting, (+) cord first.*

(For assembly)

After connecting the battery terminal (-), apply a little grease to it.

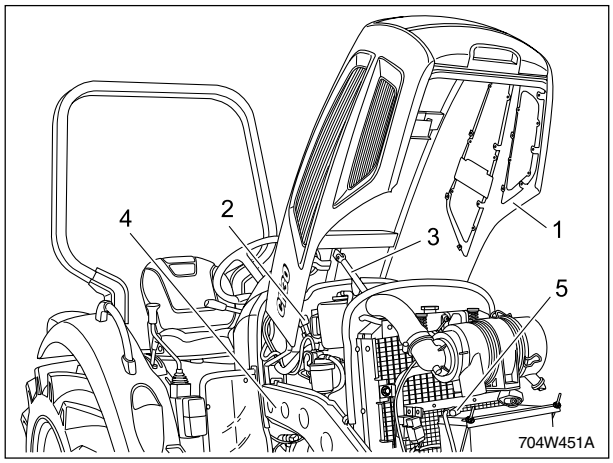

(1) Bonnet (4) Side Cover

(2) Connector (5) Battery Terminal (-)

(3) Air-cylinder

4.1.3 HYDRAULIC TUBE AND ELECTRIC WIRING

1. Remove the steering hoses(R, P, T).(2, 3, 4).
2. Remove the accelerator wires (hand, pedal).(5, 6)
3. Disconnect the bonnet wire harness 2 Assy.
4. Remove the rubber tube 1 (7) out of suction tube 3 (8).
5. Remove the hydraulic tube (B1).(9)
6. Remove the cooling tube 3 (HST type)
7. Remove the steering hose (L).(10)
8. Remove the cooling tube 4 (HST type)
9. Disconnect the bonnet wire harness 1 Assy.(11)

(When reassembling)

- A hose classification
  - Steering hose P : A red tag attachment
  - Steering hose R : A white tag attachment
  - Steering hose L : A yellow tag attachment
  - Steering hose T : No tag

Item	Tightening torque
Steering hose P, R, L	29.4 Nm 3.0 kgf-m 21.7 lb-ft
Hose band	9.8 Nm 1.0 kgf-m 7.2 lb-ft

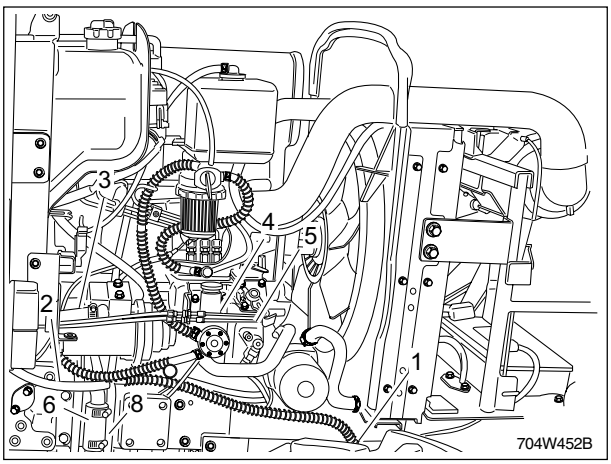

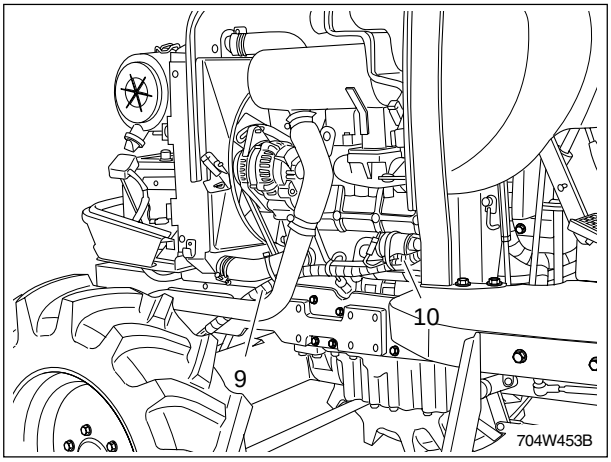

(1) Bonnet Wire Harness 1 Assy
(2) Steering Hose (R)
(3) Steering Hose (P)
(4) Steering Hose (T)
(5) Accelerator Wire (Hand)
(6) Accelerator Wire (Pedal)
(7) Rubber Pipe
(8) Suction Pipe 3
(9) Hydraulic Pipe (B1)
(10) Steering Hose (L)

4.1.4 PROPELLER SHAFT

1. Remove the bolts and slide the propeller shaft cover .
2. Tap out the spring pin (8), and then slide the coupling (2) to the rear.
3. Romove the propeller shaft and cover.

(When reassembling)

- Apply grease to the splines of the propeller shaft.

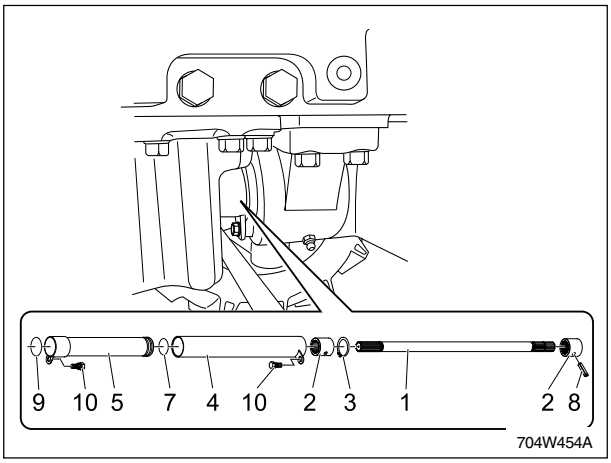

(1) Propeller Shaft
(2) Coupling
(3) Cir-Clip
(4) Propeller Shaft Cover 1
(5) Propeller Shaft Cover 2
(6) O-ring
(7) O-ring
(8) Spring Pin
(9) O-ring
(10) Bolt

4.1.5 SEPARATING ENGINE & CLUTCH HOUSING

1. Place the jacket to the bottom of the clutch housing and engine.
2. Remove the mounting bolts for the fuel tank support.
3. Separate engine and clutch housing.

(When reassembling)

- Apply grease to the release hub.(HST type: outside MECH. type: inside)
- Apply liquid gasket (loctite 5060 or equivalent) to the joint face of the flywheel housing and clutch housing.

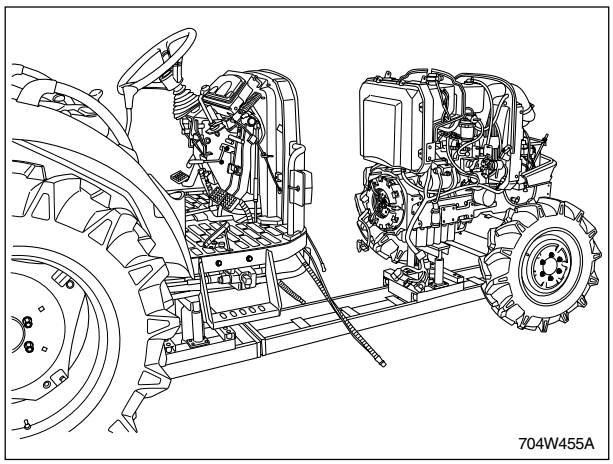

Item	Tightening torque
Bolts, nuts	48.1 ~ 55.9 Nm 4.9 ~ 5.7 kgf-m 1.004 ~ 1.167 lb-ft
Stud bolts	24.5 ~ 31.4 Nm 2.5 ~ 3.2 kgf-m 0.512 ~ 0.655 lb-ft

4.1.6 STEP MAT, SPLASHBOARD

1. Remove the rivets and the splashboard covers (LH, RH)
2. Remove the step mat.
3. Remove the bolts and the plates. (LH/RH).
4. Disconnect the wire connect or for front combination lamp.

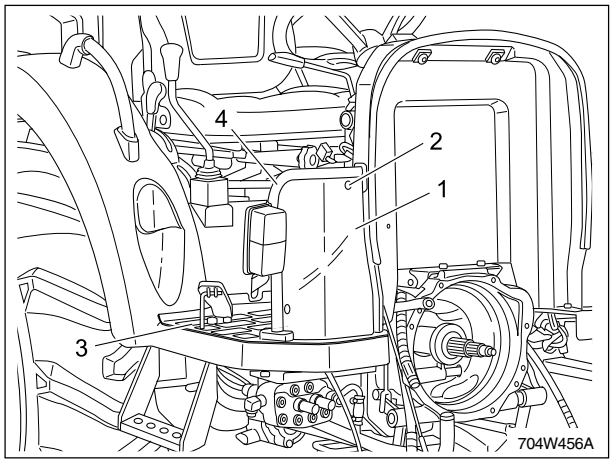

(1) Splash Board Cover
(2) Rivet
(3) Step Mat
(4) Plate

4.1.7 FRAME ASSY

1. Remove the instrument cover(lower) and remove the mounting bolts.
2. Remove the bolts and disconnect the wiring connectors for hazard, headlight, and key switch with instrument cover(upper).
3. Remove the bolts and shuttle supports.
4. Tap out the universal joint pin and remove the shuttle shaft 2.
5. Disconnect the shuttle joint rod assy.
6. Disconnect the clutch rod and brake rods (LH, RH).
7. Disconnect the wiring harness connectors for bonnet (1, 2), panel, and fender.
8. Remove the mounting bolts for the step.
9. Raise the frame assy. With nylon rope and remove the mounting bolts in the clutch housing.
10. Remove the frame assy. By pulling it slowly.

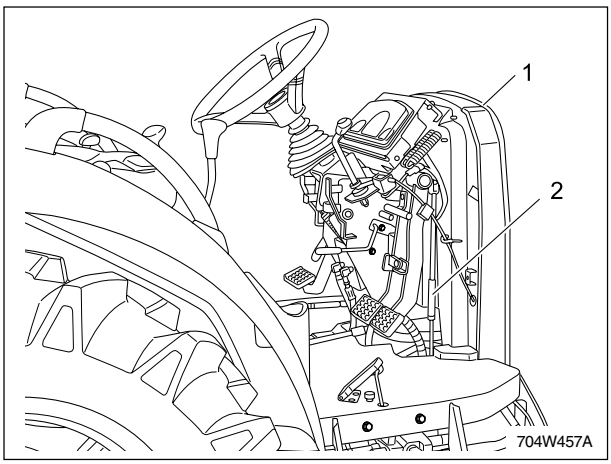

(1) Frame
(2) Brake Rod

4.1.8 ROPS

1. Remove the lock pin, linch pin and rops from the rops support.
2. Remove the bolts and the rops supports (LH, RH).

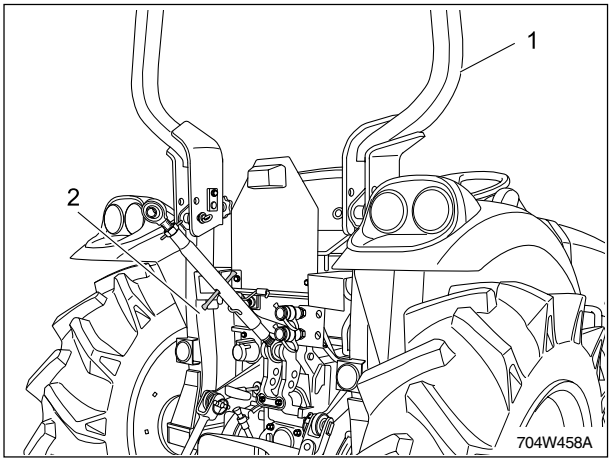

(1) Rops
(2) Rops Support

4.1.9 SEAT, LEVERS

1. Raise the frame assy. With nylon rope and remove the mounting bolts for the seat flooer.
2. Remove the seat assembly.
3. Disconnect the position lever, draft lever, and external hydraulic valve levers.
4. Remove the grips of PTO lever.
5. Remove the bolts and lever guide (LH).

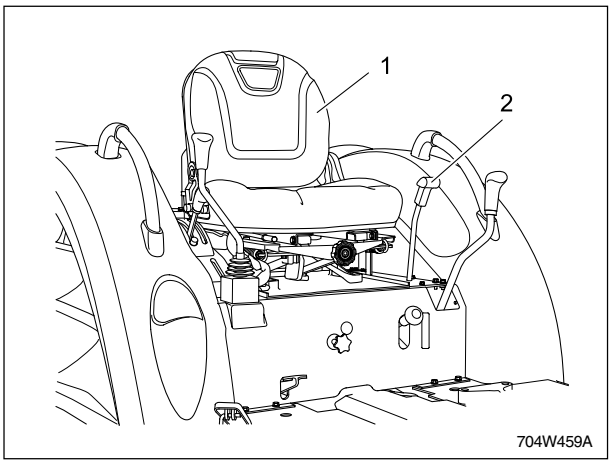

(1) Seat (2) PTO Lever

4.1.10 FENDER

1. Disconnect the brake lamp wire connector and then remove it from the fender.
2. Disconnect the wiring connectors for the work lamp, and the back lamp.
3. Raise the frame assy. With nylon rope and remove the mounting bolts in the seat flooer and front cover.
4. Remove the fender.

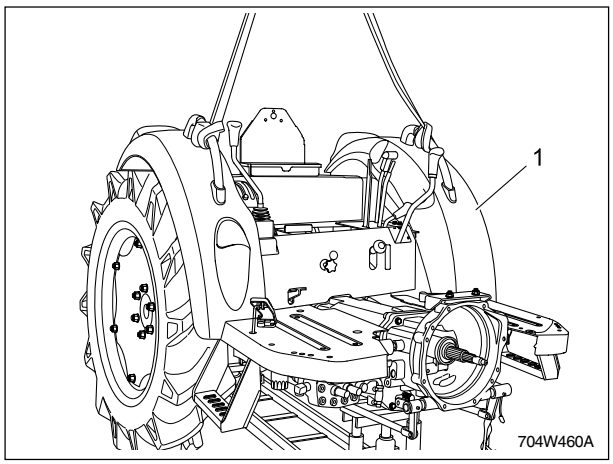

(1) Fender

4.1.11 FRONT COVER, STEP

1. Remove the pin and then remove the main shift lever.
2. Remove the grop of front wheel drive lever.
3. Disconnect the grip and the hydraulic control rod.
4. Disconnect the differential lock pedal rod.
5. Remove the joystick lever and the front cover mounting bolts.
6. Remove the front cover and step mounting bolts.
7. Remove the step (LH, RH) and support bracket mounting bolts.

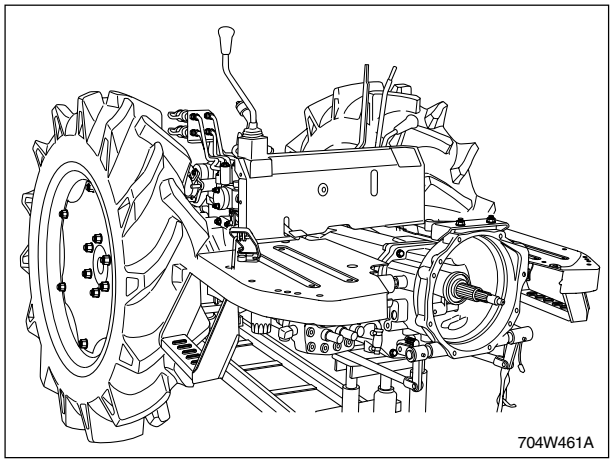

4.1.12 JOYSTICK VALVE, ETC

1. Remove the mounting bolts, joystick valve and control valve at the valve support.
2. Remove the valve support.
3. Disconnect the brake rods (LH, RH)
4. Remove the fender wiring harness.

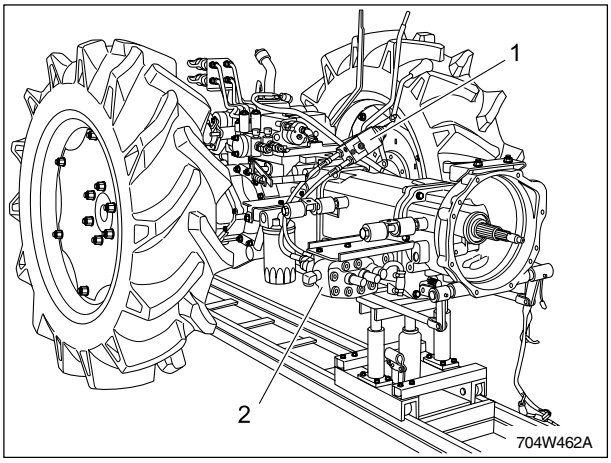

(1) Joystick Valve (2) Control Valve

4.1.13 DISASSEMBLING THE CLUTCH HOUSING

1. Place the disassembling stand under the middle case.
2. Hoist the clutch housing with a nylon lift strap.
3. Remove the bolts, nuts.

(When reassembling)

- Apply liquid gasket (loctite 5060 or equivalent) to joint face of the mid case after thorough cleaning.

Item	Tightening torque
Clutch housing and middle case mounting screws	77.5 ~ 90.2 Nm 7.9 ~ 9.2 kgf-m 57.1 ~ 66.5 lb-ft
Clutch housing and middle case mounting nuts.	102.9 ~ 117.6 Nm 10.5 ~ 12.0 kgf-m 76.9 ~ 86.8 lb-ft
Clutch housing and middle case mounting stud bolts	39.2 ~ 49.0 Nm 4.0 ~ 5.0 kgf-m 28.9 ~ 36.2 lb-ft

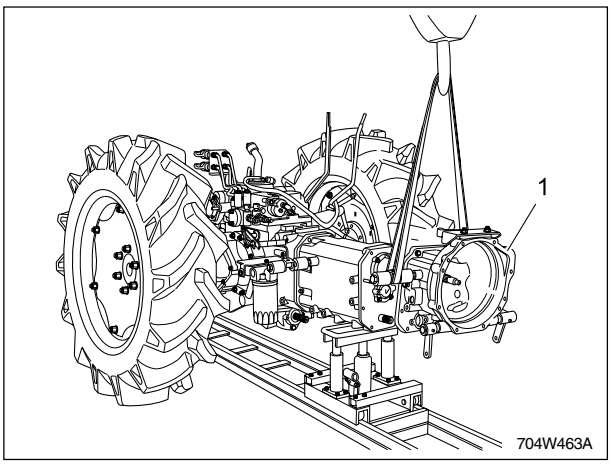

(1) Clutch Housing

4.1.14 DISASSEMBLING THE MIDDLE CASE

1. Remove the range shifter lever. Then remove the snap ring, plain washer and range shifter connecting plate.
2. Tap out the spring pin of range shift arm (1) and remove the range shift connecting arm (2).
3. Remove the stopper (3) and then pull the range shift arm (1).
4. Remove the middle case and transmission case mounting bolts and nuts.
5. Separate middle case and transmission case.

(When reassembling)

Apply liquid gasket(loctite 5060 or equivalent) to joint face of the middle case and transmission case.

Item	Tightening torque
Bolt, nut	48.1 ~ 55.9 Nm 4.9 ~ 5.7 kgf-m 35.4 ~ 41.2 lb-ft
Stud bolt	24.5 ~ 29.4 Nm 2.5 ~ 3.0 kgf-m 20.3 ~ 21.7 lb-ft

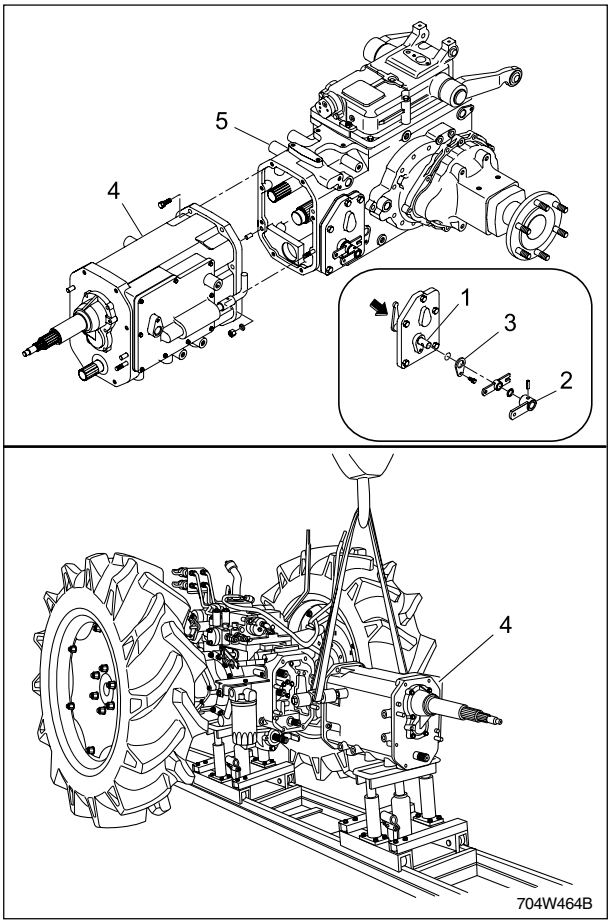

(1) Range Shift Arm
(2) Range Shift Connecting Arm
(3) Stopper
(4) Middle Case
(5) Transmission Case

4.1.15 DISASSEMBLING THE PROPELLER SHAFT CASE

1. Remove the propeller shaft case mounting bolts.
2. Thread two M6 bolts into the case to pull it out.
3. Remove the oil seal and snap ring.
4. Remove the front driving shaft2 sub assy.

(When reassembling)

Apply liquid gasket(loctite 5060 or equivalent) to joint face of the middle case and propeller shaft case.

Item	Tightening torque
Propeller shaft case disassembling bolt	23.5 ~ 27.5 Nm 2.4 ~ 2.8 kgf-m 17.4 ~ 20.3 lb-ft

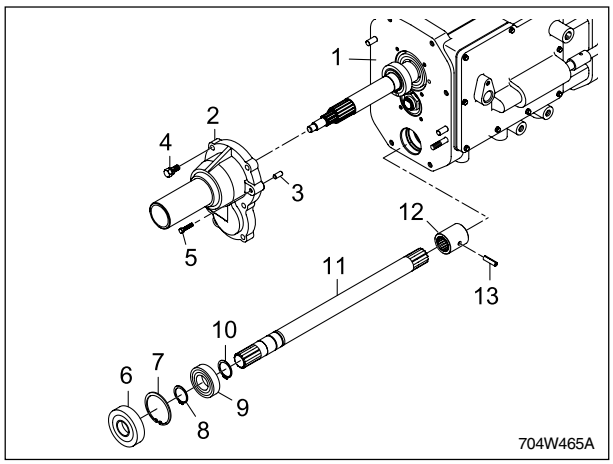

(1) Middle Case
(2) Propeller Shaft Case
(3) Parallel Pin
(4) Mounting Bolts
(5) Service Bolt
(6) Oil Seal
(7) Snap Ring
(8) Snap Ring
(9) Rearing
(10) Snap Ring
(11) Front Driving Shaft2
(12) Coupling
(13) Spring Pin

4.1.16 DISASSEMBLING RANGE SHIFT SHAFT

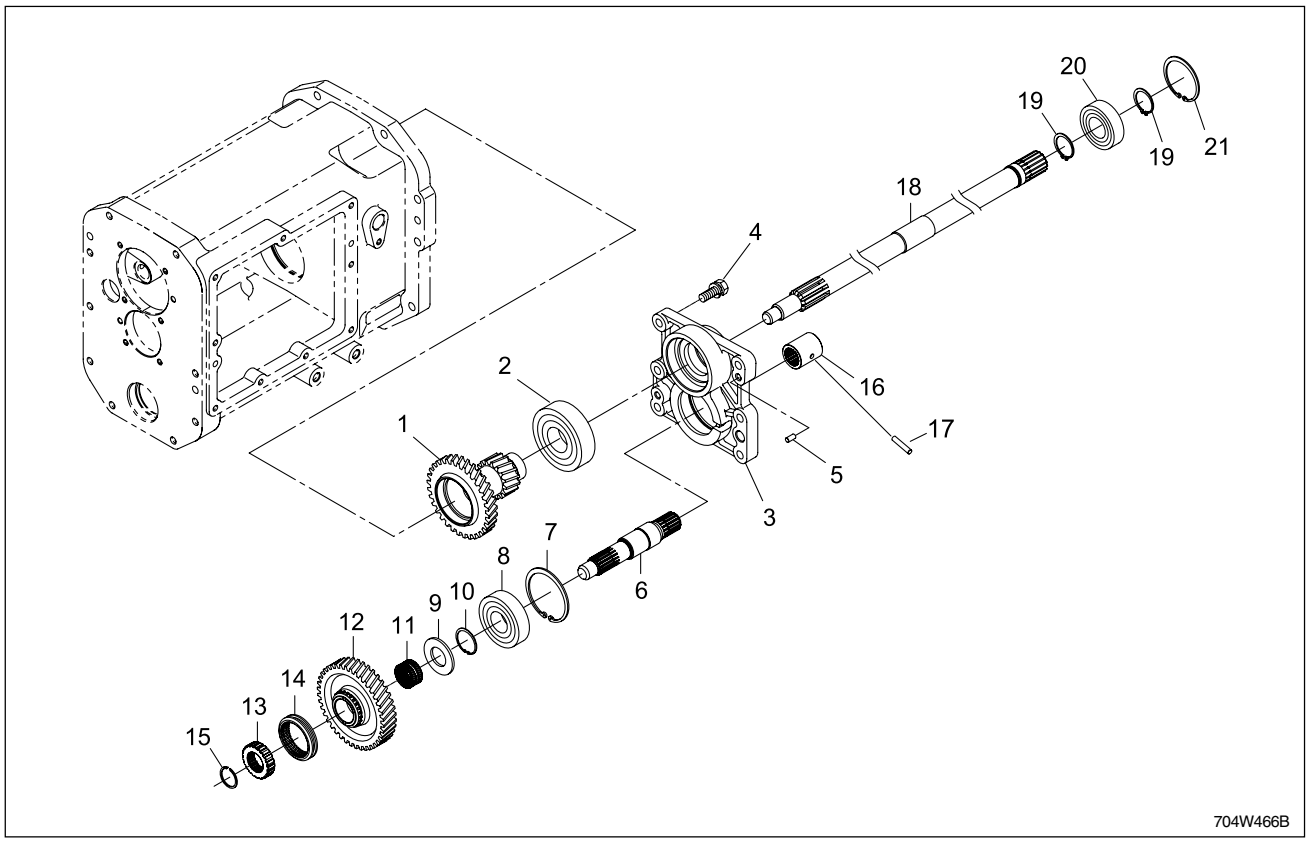

(1) 34-15 Gear
(2) Ball Bearing
(3) Bearing Cover
(4) Bolt
(5) Parallel Pin
(6) Range Shift Shaft
(7) Snap Ring
(8) Ball Bearing
(9) Thrust Collar
(10) Snap Ring
(11) Inner Ring
(12) 37 Gear
(13) Spline Boss
(14) Shifter
(15) Snap Ring
(16) Coupling
(17) Spring Pin
(18) PTO Drive Shaft 1
(19) Snap Ring
(20) Ball Bearing
(21) Snap Ring

1. Remove the snap ring (21). Then remove the shaft (18) as a unit from middle case.
2. Remove the bearing cover (3) using bolts.
3. Remove the snap ring (15). Then remove the shifter (14), spline boss (13), 37gear, inner ring and thrust collar (9).
4. Remove the 34-15gear (1) and ball bearing (2) from the bearing cover (3).
5. Remove the snap ring (7) and then remove the range shift shaft (6) and bearing (8).

(When reassembling)

when assembling, face the oil groove of the thrust collar toward the gear.

Item	Tightening torque
Bolt	48.1 ~ 55.9 Nm 4.9 ~ 5.7 kgf-m 35.4 ~ 41.2 lb-ft

4.1.17 MAIN SHIFT COVER

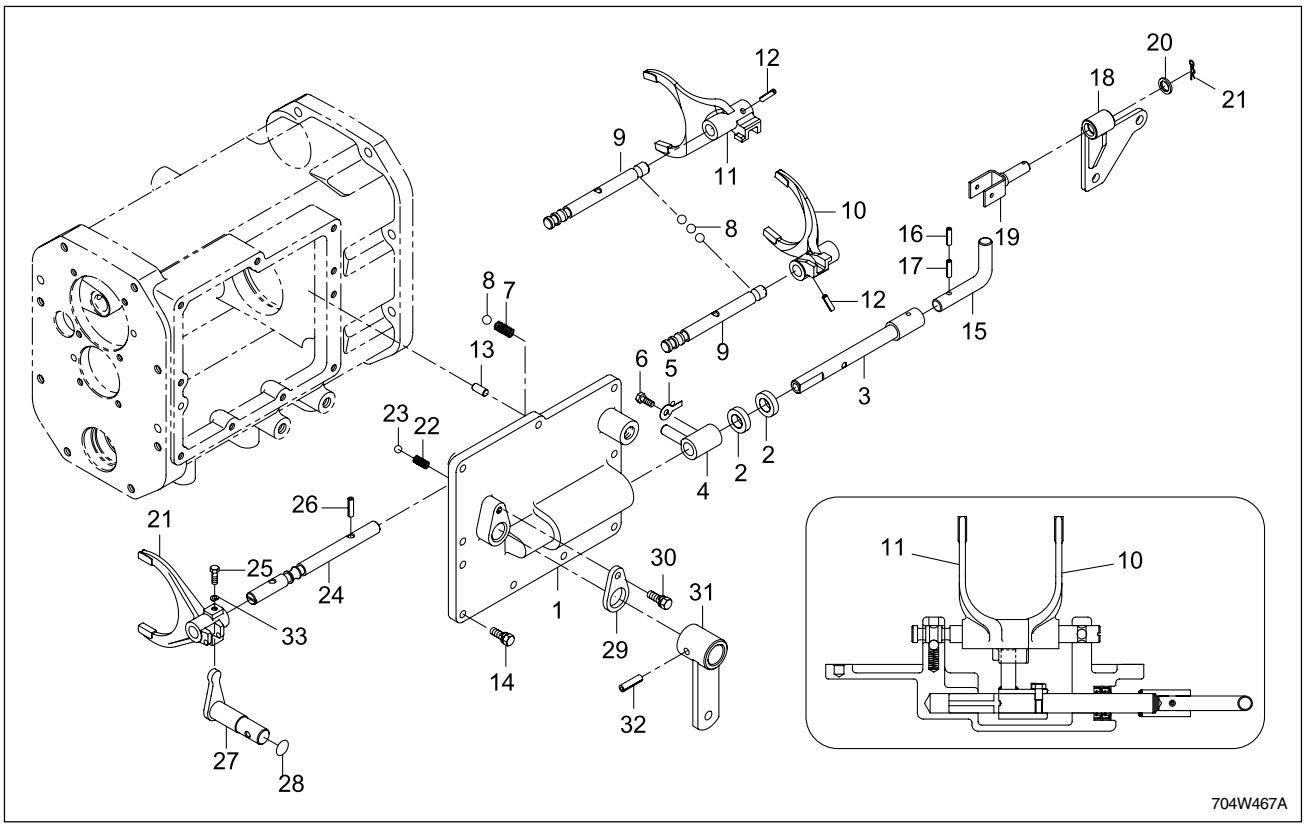

(1) Main Shift Cover	(10) Main Shift Fork (1, 2)	(18) Main Shift Pin	(26) Spring Pin
(2) Oil Seal	(11) Spring Pin	(19) Washer	(27) Shuttle Shift Arm
(3) Main Shift Rod	(12) Spring Pin	(20) Snap Pin	(28) O-ring
(4) Main Shift Arm	(13) Bolt	(21) Shuttle Shift Fork	(29) Stopper
(5) Washer	(14) Main Shift Rod	(22) Spring	(30) Bolt
(6) Mounting Bolts	(15) Spring Pin	(23) Ball	(31) Shuttle Lever 1
(7) Spring	(16) Spring Pin	(24) Shuttle Shift Rod	(32) Spring Pin
(8) Ball	(17) Main Shift Braket	(25) Bolt	(33) Washer
(9) Fork Rod			

1. Remove the bolts (14) at 9 places on the middle case side to loosen main shift cover (1).
2. Remove the bolts (30) to loosen stopper (29) and push shift arm to the outside of main shift cover to remove shuttle shift fork (21).
3. Loosen rod mounting spring pin (26) and tap out the fork rod (24).
4. Remove the bolts (25) and tap out shuttle shift fork (21).
5. Loosen fork mounting spring pin (12).
6. Remove fork rod (9) to disassemble steel ball (8).
7. Remove the cocking on tongue mounting washer (5) and remove mounting bolts (6).
8. Remove the main shift rod (3), main shift arm (4) and oil seals (2).

Item	Tightening torque
Mounting bolt	23.5 ~ 27.5 Nm 2.4 ~ 2.8 kgf-m 17.3 ~ 20.3 lb-ft

CAUTION

- ***Be sure to locate and keep track of the 3 steel balls. They are needed during assembly to attach the gears.***

(When reassembling)

Apply liquid gasket(loctite 5060 or equivalent) to joint face of the middle case and the shift cover.

4.1.18 SHUTTLE SYSTEM

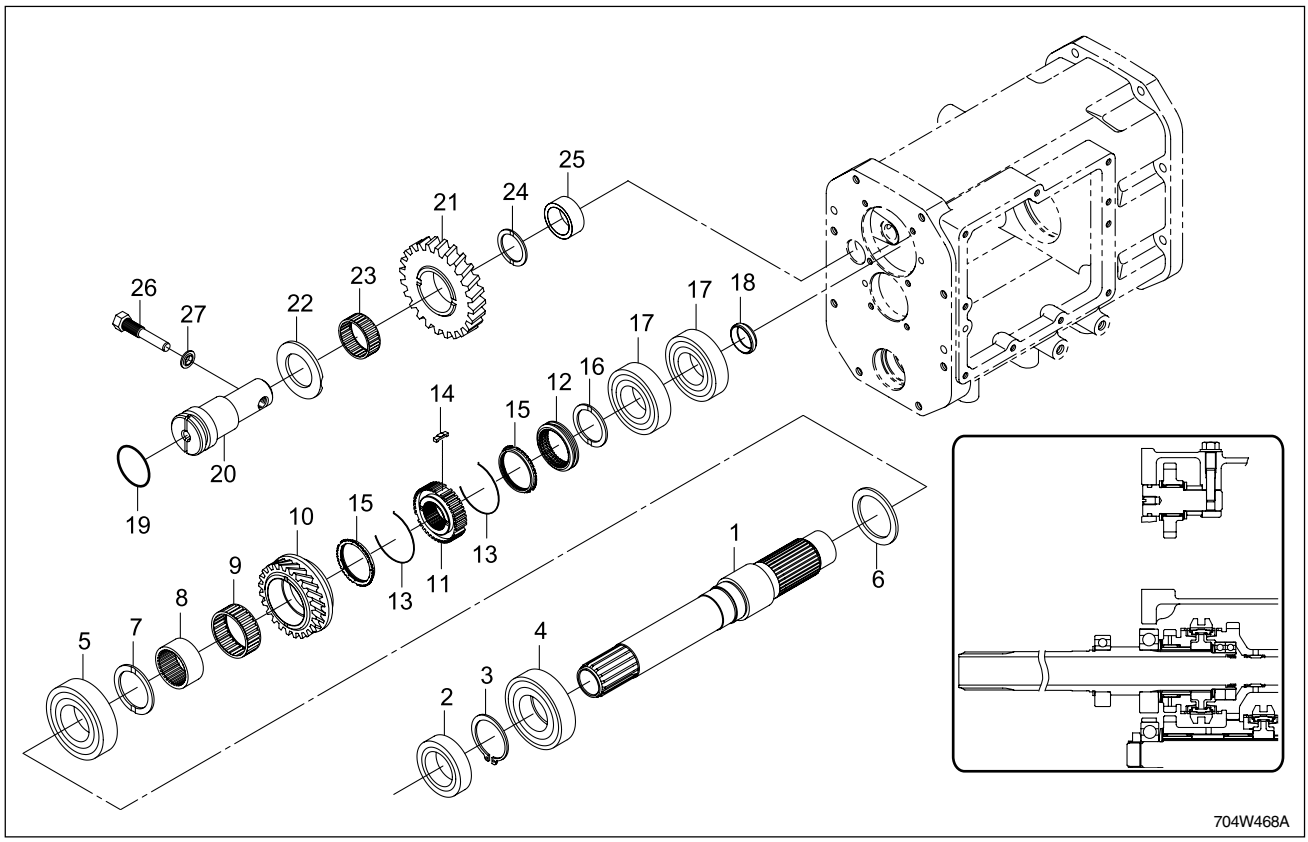

(1) Shuttle Shaft	(8) Inner Ring	(15) Synchronizer Ring	(22) Thrust Collar
(2) Oil Seal	(9) Needle Bearing	(16) Thrust Collar	(23) Needle Bearing
(3) Snap Ring	(10) 28 Gear	(17) Ball Bearing	(24) Thrust Collar
(4) Ball Bearing	(11) Spring Hub	(18) Oil Seal	(25) Spacer
(5) Ball Bearing	(12) Shifter	(19) O-ring	(26) Set Bolt
(6) Shim	(13) Synchronizer Spring	(20) Reverse Shaft	(27) Seal Washer
(7) Thrust Collar	(14) Synchronizer Key	(21) 25 Gear	

1. Draw out shuttle shaft (1) from the front of the middle case.
2. Remove the snap ring and remove both sides of the bearing (4) (17).
3. Remove the set bolt (26) and pull out the reverse shaft (20). Then remove the pieces from thrust collar (22) to the spacer (25), in order.

CAUTION

- ***When assembling, locate the oil groove of the thrust collar facing the gear.***
- ***Reinstall the synchronizer keys in the key grooves of the synchronizer rings firmly.***

4.1.19 MAIN SHIFT GEAR

A. SHAFT 2 GROUP

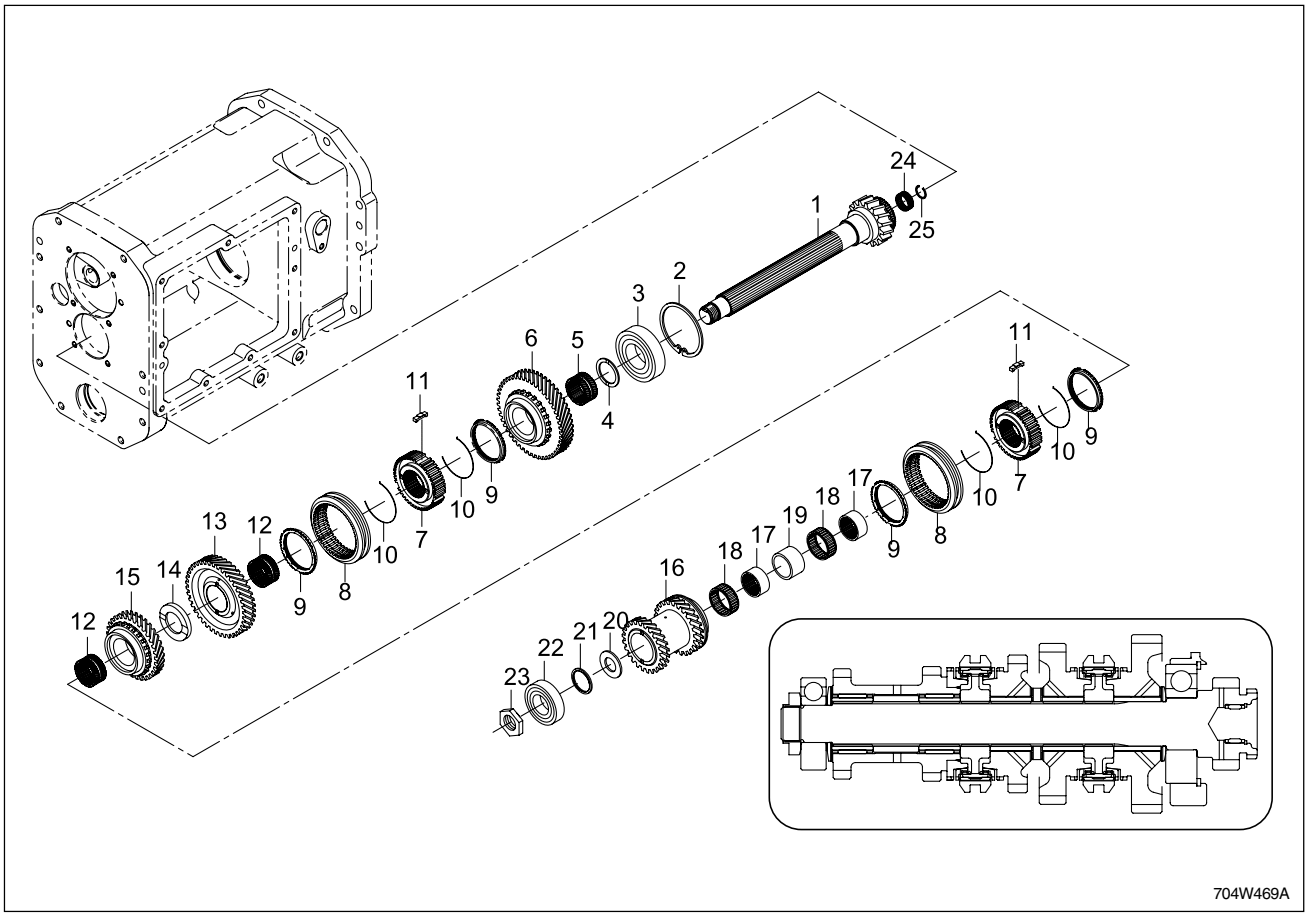

(1) 18 Gear Shaft
(2) Snap Ring
(3) Ball Bearing
(4) Thrust Collar
(5) Inner Ring
(6) 43 Gear
(7) Synchro Hub
(8) Shifter
(9) Synchronizer Ring
(10) Synchronizer Spring
(11) Synchronizer Key
(12) Inner Ring
(13) 39 Gear
(14) Thrust Collar
(15) 33 Gear
(16) 26-27 Gear
(17) Inner Ring
(18) Needle Bearing
(19) Spacer
(20) Thrust Collar
(21) Shim
(22) Ball Bearing
(23) 24 Nut
(24) Needle Bearing
(25) Snap Ring

1. Remove the locking tab on the 24 nut (23). Loosen the nut.
2. Slightly knock the end of the 18 gear shaft (1) with a rubber hammer backward (toward the transmission case) to remove 18 gear shaft (1).

Item	Tightening torque
24 Nut	127.5 ~ 176.5 Nm 13 ~ 18 kgf-m 94.0 ~ 130.2 lb-ft

(When reassembling)

- When assembling, locate the oil groove of the thrust collar toward the gear.

B. SHAFT 1 GROUP

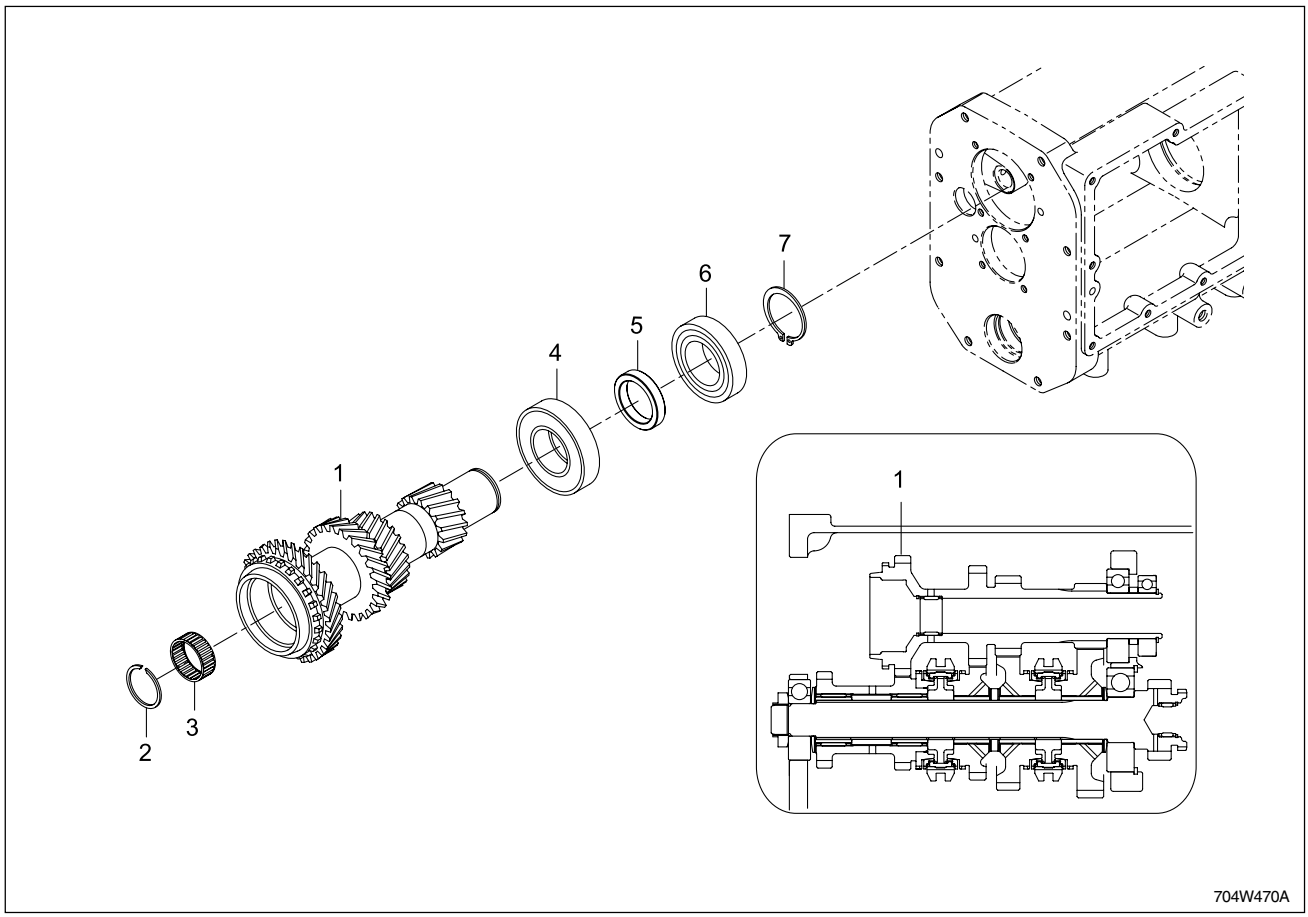

(1) Main Shift Gear Shaft
(2) Snap Ring
(3) Needle Bearing
(4) Ball Bearing
(5) Ball Bearing
(6) Ball Bearing
(7) Snap Ring

1. Remove the snap ring (2) and then remove the needle bearing (3) and main shift gear shaft from the middle case.
2. Remove the snap ring (7), ball bearing (6), spacer (5), and ball bearing (4).

4.1.20 CREEP SHIFT GEAR (OPTION)

A. CREEP SYSREM ASSY GROUP

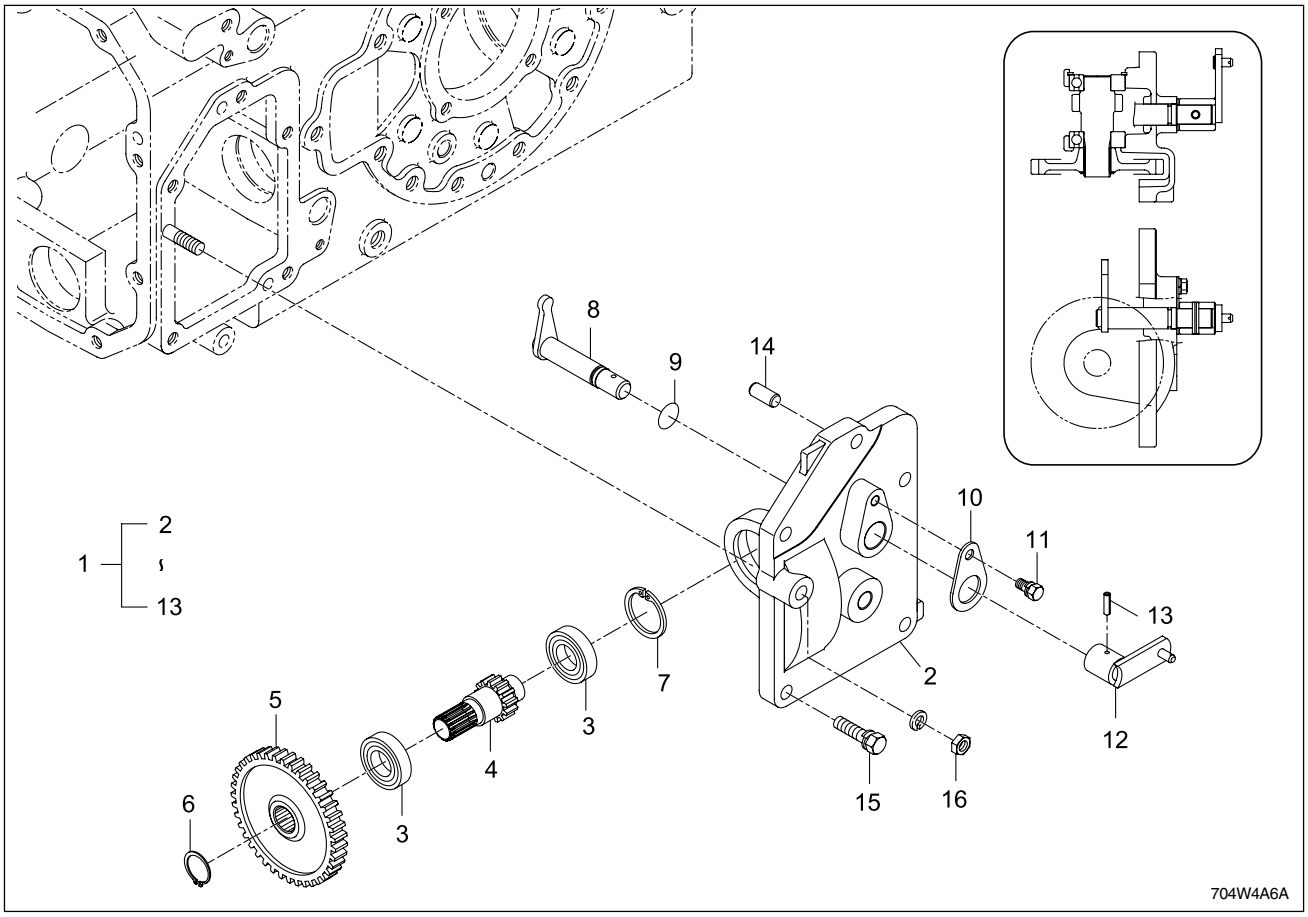

(1) Creep System Assy	(5) 39 Gear	(9) O-ring	(13) Spring Pin
(2) Creep Cover	(6) Snap Ring	(10) Stopper	(14) Straight Pin
(3) Ball Bearing	(7) Snap Ring	(11) Bolt	(15) Bolt
(4) 13 Gear Shaft	(8) Creep Shift Arm	(12) Creep Connecting Arm	(16) Nut

1. Loosen the bolts (15) and net (16).
2. Remove the creep system assy (1).

(When reassembling)

- Apply liquid gasket(loctite 5060 or equivalent) to joint face of the trasmission case and the creep cover.

B. CREEP SHAFT GROUP

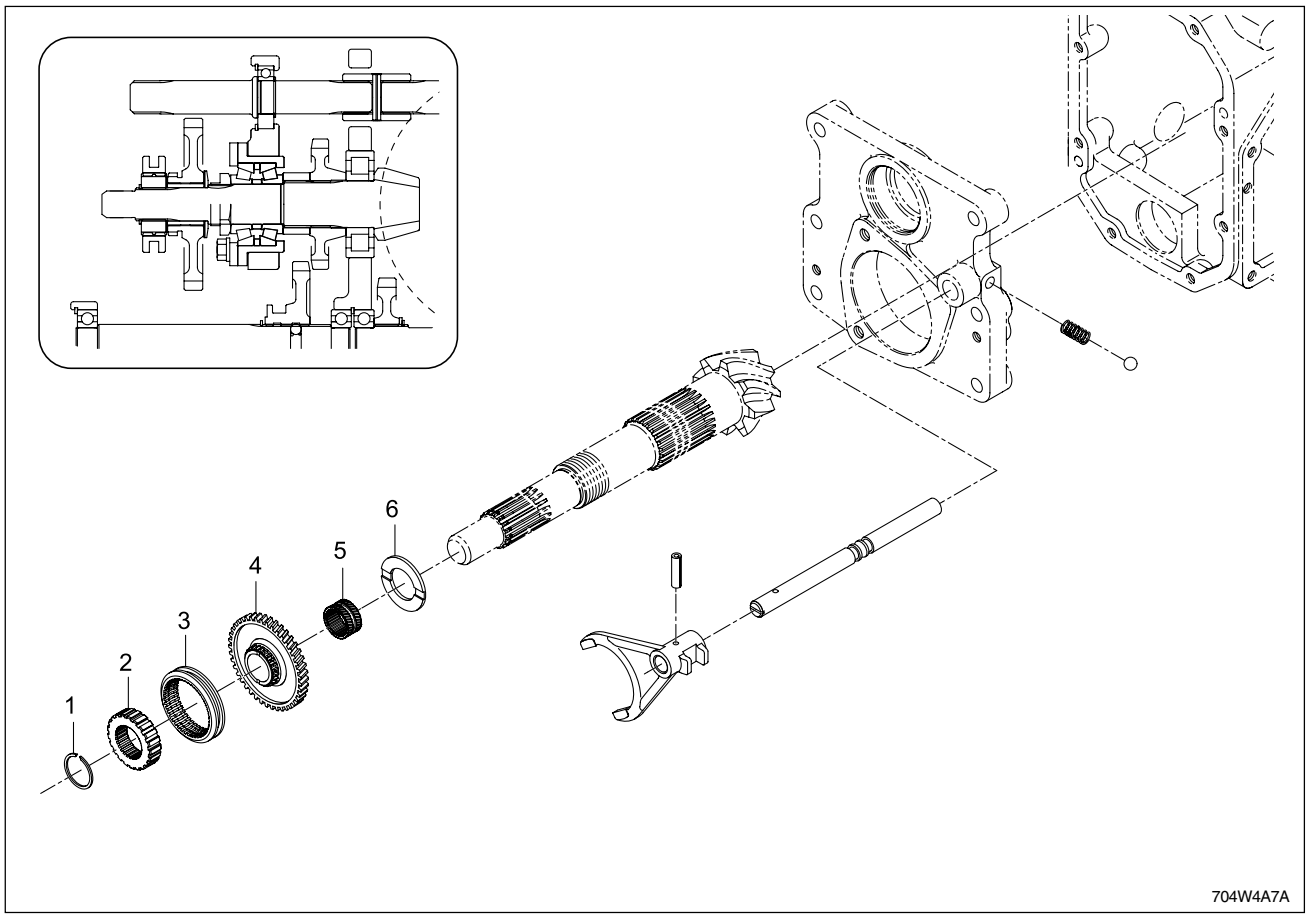

(1) Snap Ring
(2) Spline Boss
(3) Shift
(4) 41 Gear
(5) Inner Ring
(6) Thrust Collar

1. Remove the snap ring (1), spline boss (2), shift (3), 41 gear (4), inner ring (5) and thrust collar (6).

(When reassembling)

- When assembling, locate the oil groove of the thrust collar toward the gear.

4.1.21 DISASSEMBLING SPIRAL BEVEL PINION

1. Remove the bolts and pull out the bearing case by using bolts threaded into the case.
2. Remove the bolts, bearing cover, bearing case with pinion shaft, as a unit from the bearing case.
3. Remove the locking tab on the 30 nut. Loosen the nut.
4. Take out the spiral bevel pinion shaft from the rear.
5. Remove the tapered roller bearing, spacer, 30 gear and roller bearing.

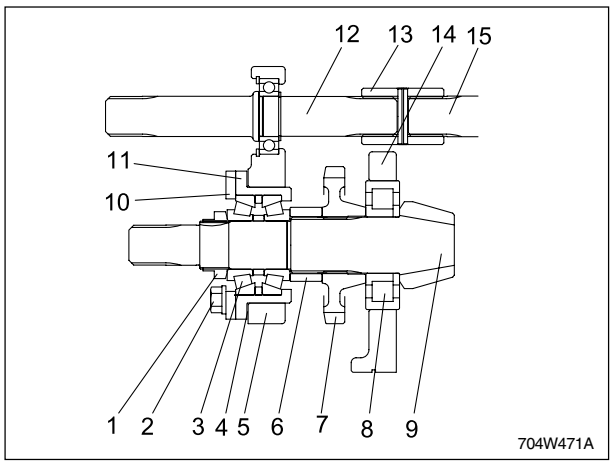

(1) 30 Nut
(2) Bolt
(3) Taper Roller Bearing
(4) Shim
(5) Bearing Cover
(6) Spacer
(7) 30 Gear
(8) Roller Bearing
(9) Spiral Bevel Pinion
(10) Bearing Cover
(11) Bearing Case
(12) PTO Drive Shaft 3
(13) Coupling
(14) Transmission Case
(15) PTO Drive Shaft

4.1.22 REAR PTO

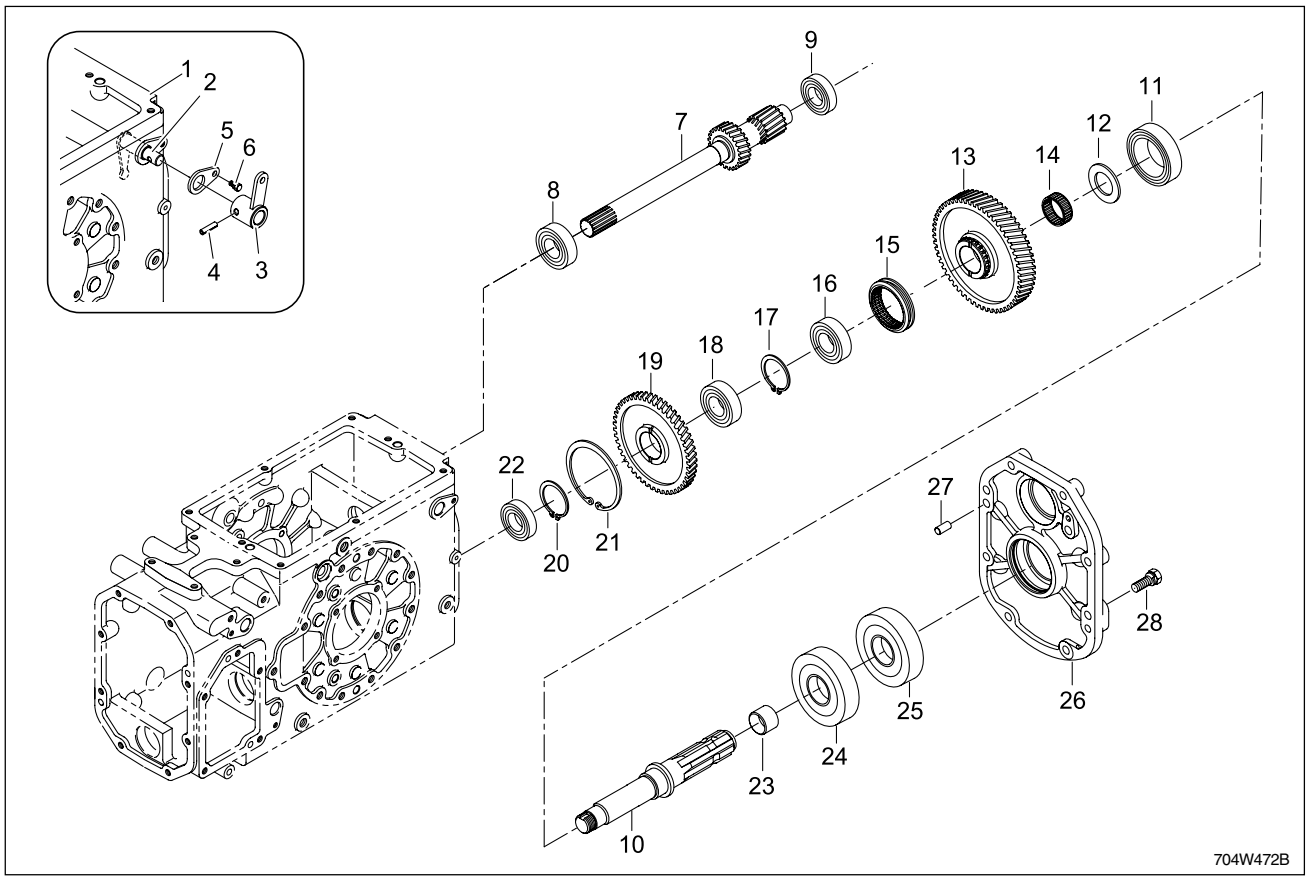

(1) Transmission Case	(8) Ball Bearing	(15) Shifter	(22) Ball Bearing (Groove)
(2) PTO Shift Arm	(9) Ball Bearing	(16) Ball Bering 1	(23) Sleeve
(3) PTO Connecting Arm	(10) PTO Shaft	(17) Snap Ring	(24) Oil Seal
(4) Spring Pin	(11) Ball Bearing	(18) Ball Bering 2	(25) Oil Seal
(5) Stopper	(12)Thrust Collar	(19) 48 Gear	(26) PTO Bearing Case
(6) Bolt	(13) 56 Gear	(20) Snap Ring (Small)	(27) Straight Pin
(7) PTO Driving Shaft	(14) Needle Bearing	(21) Snap Ring (Large)	(28) Bolt

1. Disconnect the PTO transmission arm from the stopper before disassembly of the PTO assembly.
2. Pull the shift arm (2) outward.
3. Loosen the bolts of PTO bearing case and disconnect as an assembly.
4. Disconnect the PTO shaft (7).
5. Remove locking tabs of nut 24 (21) and remove the nut.
6. Detach the bearing (9). Disassemble parts (14) ~ (20) in turn.
7. After removal of the snap ring (12), remove the PTO (10) from the bearing case.

(When assembling)

- When assembling the oil seal, apply grease. Pay attention to assembly method and direction.
- When assembling the thrust collar, locate the oil groove toward the gear.
- Apply liquid gasket (loctite 5060 or a equivalent) to the point of contact of bearing and transmission case.
- When assembling the stopper, apply a binder (Three Bond 1372 or equivalent) to the bolts.

4.1.23 MID PTO

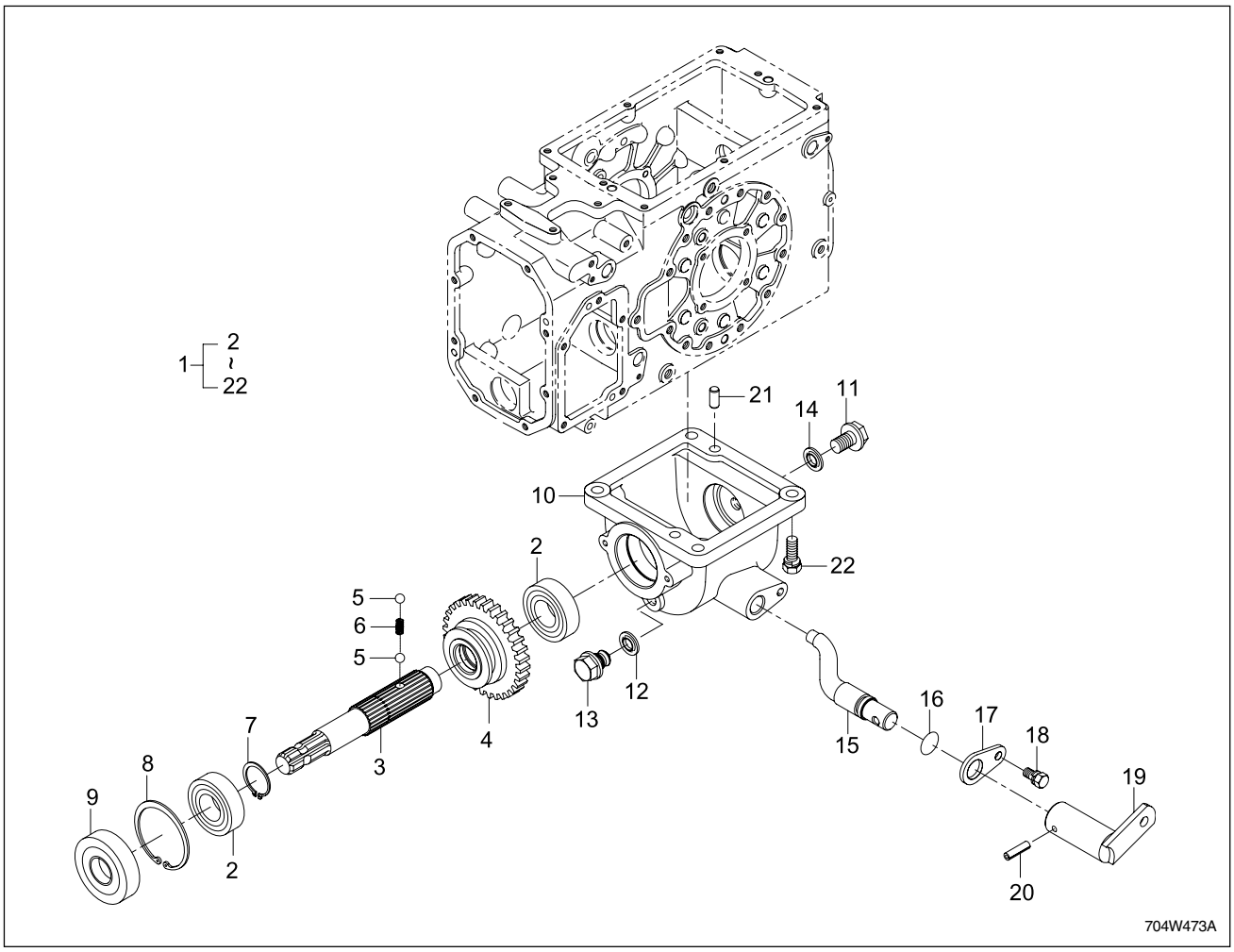

(1) Mid PTO Assembly	(7) Snap Ring	(13) Magnetic Plug	(18) Bolt
(2) Ball Bearing	(8) Snap Ring	(14) Seal Washer	(19) Mid PTO Lever 1
(3) Mid PTO Shaft	(9) Oil Seal	(15) Mid PTO Shift Arm	(20) Spring Pin
(4) 32 Gear	(10) Mid PTO Case	(16) O-ring	(21) Parallel Pin
(5) Ball	(11) Plug	(17) Stopper	(22) Bolt
(6) Spring	(12) Seal Washer		

1. Loosen the bolts (22) and remove the Mid PTO assembly (1) from the transmission case.
2. Remove the spring pin (20) and pull out the Mid PTO lever 1(19).
3. Loosen the bolt (18) and remove the stopper (17), then push out the transmission arm (15).
4. Remove the oil seal (9) and the snap ring (8).
5. Remove the plug (11) and the sealing washer (14). Put a tool into the plug's (11) hole. Tap the Mid PTO shaft (3) forward.
6. Disconnect the 32 gear (4) from the Mid PTO shaft (3), taking care not to lose the balls (5) and spring (6).

(When reassembling)

- Apply liquid gasket (loctite 5060 or equivalent) to the sealing surfaces of the Mid PTO case and the transmission case. Thoroughly clean the cases prior to assembly.

4.1.24 TUBE, AUX. CONTROL VALVE (IF ATTACHED)

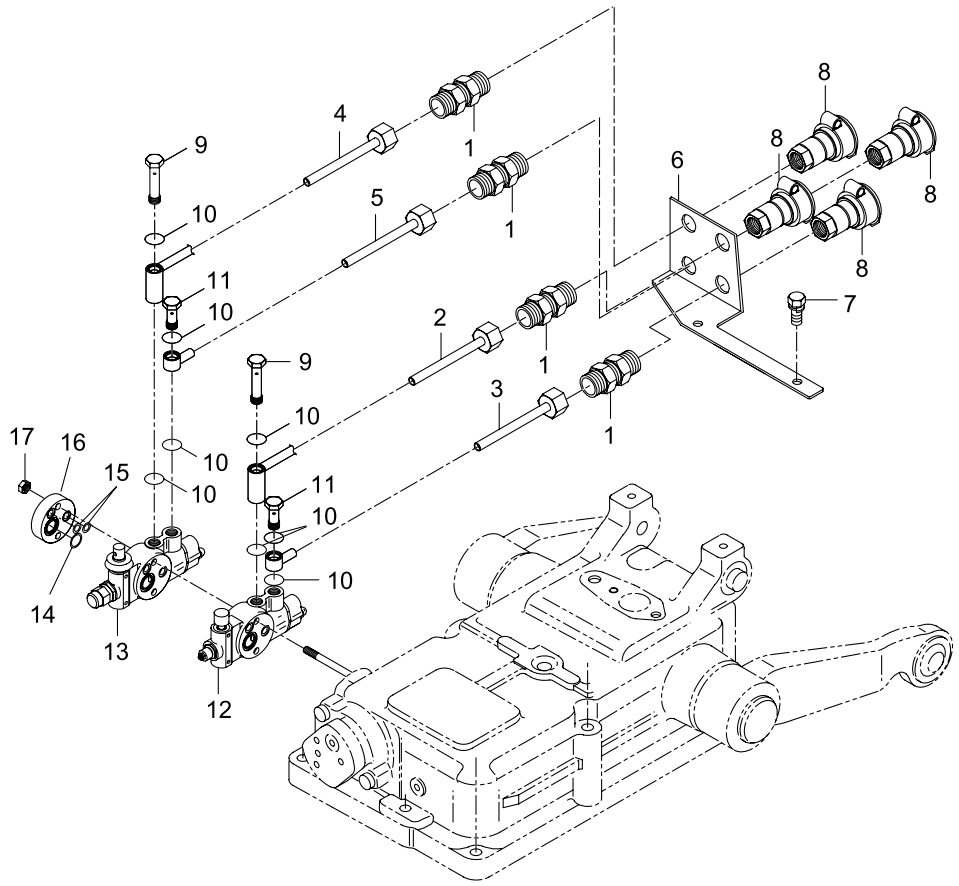

(1) Filter Connector
(2) Hydraulic Tube (A)
(3) Hydraulic Tube (B)
(4) Hydraulic Tube (C)
(5) Hydraulic Tube (D)
(6) Socket Support
(7) Bolt
(8) Coupler Socket Assy
(9) Joint Bolt 2
(10) O-ring
(11) Joint Bolt
(12) Double Acting Valve Assy
(13) Detent Floating Valve Assy
(14) O-ring
(15) O-ring
(16) Cover
(17) Nut

1. Remove the joint bolt (9, 11), hydraulic tube (2, 3, 4, 5), socket support (6) and quick coupler.
2. Remove the nut (17) from aux. control valve and then remove the aux. control valve from the hydraulic cylinder body.

(When reassembling)

- Make sure the O-ring is not damage.

Item	Tightening torque
Joint bolts	34.3 ~ 39.2 Nm 3.5 ~ 4.0 kgf-m 25.3 ~ 28.9 lb-ft

4.1.25 HYDRAULIC CYLINDER

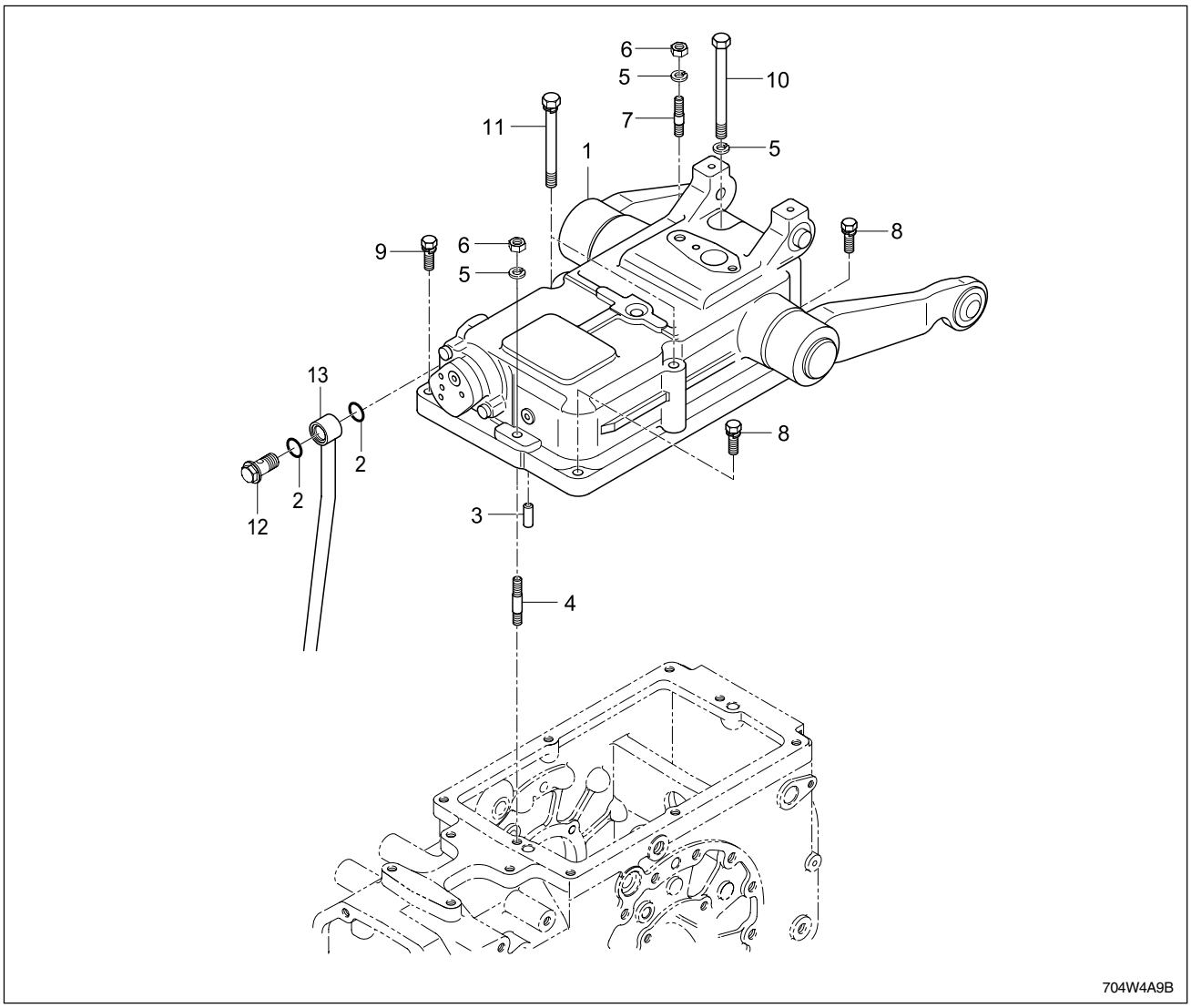

(1) Hydraulic Cylinder Assembly
(2) O-ring
(3) Straight Pin
(4) Stud
(5) Spring Washer
(6) Nut
(7) Stud
(8) Bolt
(9) Bolt
(10) Bolt
(11) Bolt
(12) Joint Bolt
(13) Hydraulic Tube (J2)

1. Remove the joint bolt (12) and O-rings (2).
2. Remove the hydraulic cylinder assembly mounting bolts (8,9,10,11), spring washers (5) and nuts (6).
3. Separate the hydraulic cylinder assembly (1) from the transmission case.

(When reassembling)

- Apply liquid gasket.(loctite 5060 or equivalent)

Item	Tightening torque
Hydraulic cylinder mounting bolt and nut	48.1 ~ 55.8 Nm 4.9 ~ 5.7 kgf-m 35.5 ~ 41.2 lb-ft
Joint bolts	34.3 ~ 39.2 Nm 3.5 ~ 4.0 kgf-m 25.3 ~ 28.9 lb-ft

4.1.26 SEPARATION OF DIFFERENTIAL GEAR ASSEMBLY

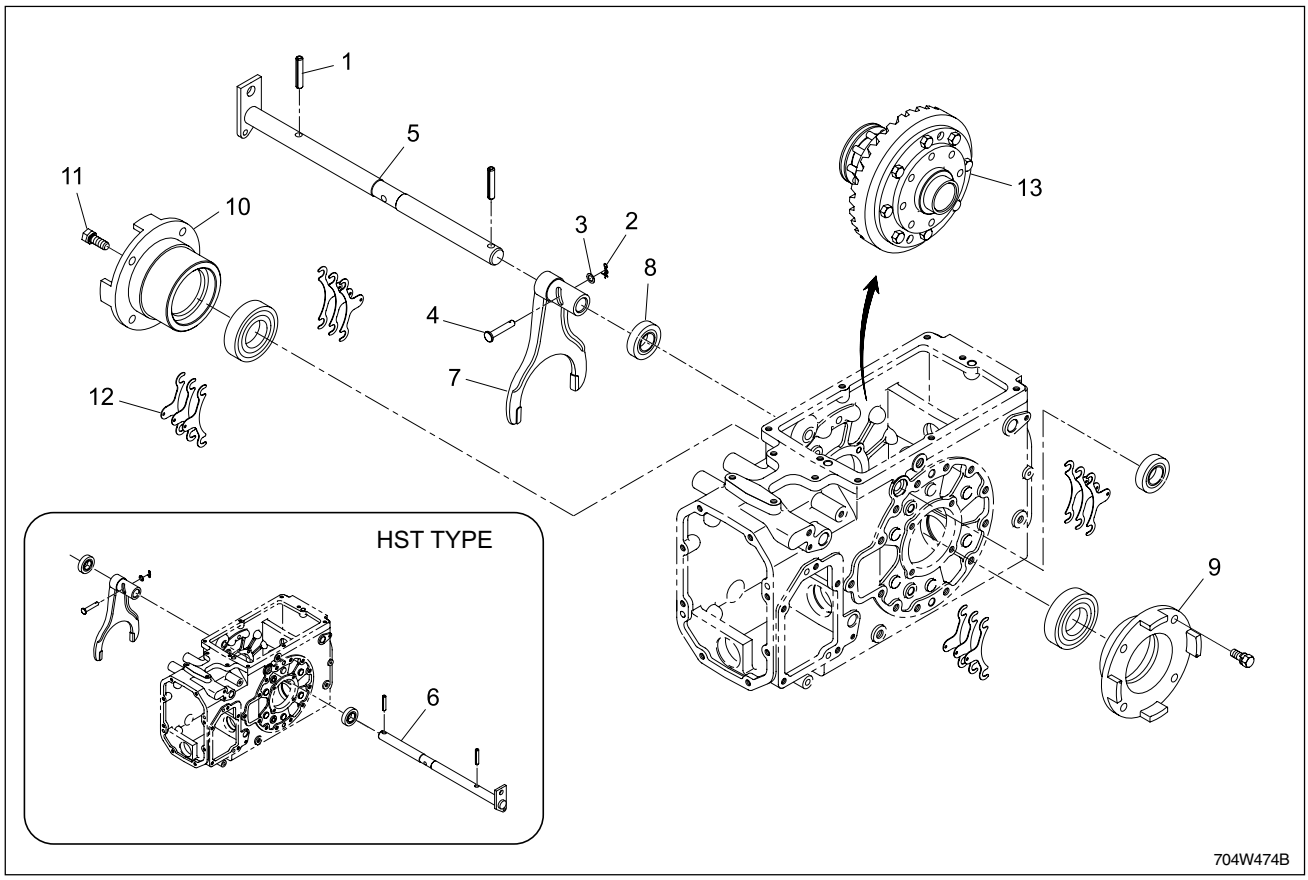

(1) Spring Pin
(2) Snap Pin
(3) Flat Washer
(4) Pin
(5) Differential Locking Fork Shaft (Manual Type)
(6) Differential Locking Fork Shaft (HST Type)
(7) Differential Locking Fork
(8) Oil Seal
(9) Bearing Case (Left)
(10) Bearing Case (Right)
(11) Bolt
(12) Shim
(13) Differential Gear Assembly

1. Pull out the spring pin (1).
2. Pull out the snap pin (2) and remove the flat washer (3) and pin (4).
3. Pull out the differential locking fork shaft (5) and remove the differential locking fork (6).
4. Loosen the left and right bearing cases (9) & (10). Remove the bolts (11), the bearing case, and the adjusting shim(s) (12). Note the # and location of the shims.
5. Disconnect the differential gear assembly (13) from the transmission case.

(When reassembling)

- Make sure spiral bevel gear is not worn. Change the bevel pinion in a set, if necessary.
- Make sure of assembly direction of differential gear assembly.
- When viewed from the rear, the spiral bevel gear (ring gear) is located on the left.
- When assembling bearing cover, take care to reassemble the shims as noted during removal.
- Apply grease to the oil seal and it's contact area on the transmission case. Take care not to damage the seal during assembly.
- Locate the spring pin with the forked portion outward (opposite of oil seal).

Sect.	Spec.	Tightening torque
Tightening bolt	M10	48.0 ~ 55.9 Nm 4.9 ~ 5.7 kgf-m 35.5 ~ 41.2 lbf-ft

4.1.27 DISASSEMBLING OF DIFFERENTIAL GEAR

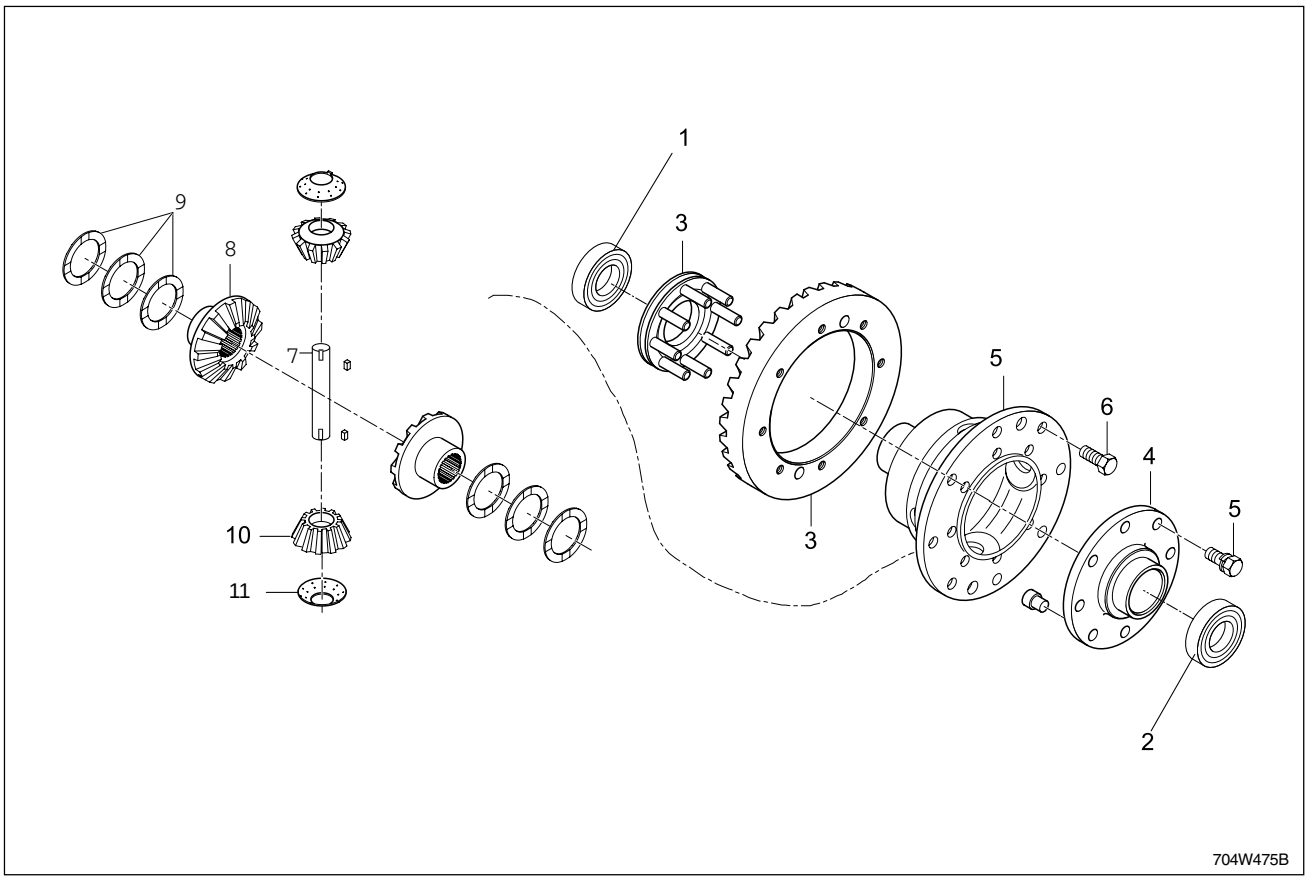

(1) Ball Bearing
(2) Ball Bearing
(3) Differential Locking Shift
(4) Cap
(5) Spiral Bevel Gear
(6) Bolt
(7) Differential Pinion Shaft 1
(8) Differential Side Gear
(9) Differential Washer
(10) Differential Pinion
(11) Differential Pinion Washer

1. Disassemble taper roller bearing (1), (2) using special tool.
2. Pull out the differential locking shift (3).
3. Remove the bolts from the differential gear cap (4) and spiral bevel gear (5). Remove the cap and the spiral bevel gear (5).
4. Pull out differential pinion shaft 1 (7). Remove the differential side gear (8), differential washer (9), differential pinion (10), and differential pinion washer (11).

(When reassembling)

- If there is evidence of wear or damage on differential gear, differential pinion, differential side gear, or the differential pinion shaft, replace the parts as a set.
- Apply molybdenum (Three Bond 1901 or equivalent) to each operating part of differential gear.
- Apply a bonding agent to the differential case cap and spiral bevel gear bolts. Tighten bolts in a diagonal pattern.

Bonding agent	Three Bond 1372 or equivalent

Sect.	Spec.	Tightening Torque
Cap tightening bolt	M10	48.0 ~ 55.9 Nm 4.9 ~ 5.7 kgf-m 35.5 ~ 41.2 lbf-ft
Spiral bevel gear tightening bolt	M10 (UBS)	68.6 ~ 88.2 Nm 7.0 ~ 9.0 kgf-m 50.6 ~ 65.1 lbf-ft

4.2 INSPECTION FOR OVERHAUL

4.2.1 BACKLASH AND TOOTH CONTACT BETWEEN SPIRAL BEVEL GEAR AND SPIRAL BEVEL PINION SHAFT

1. Set the dial indicator (lever type) with its finger on the tooth surface.
2. Measure the backlash by fixing the spiral bevel pinion shaft(3) and moving the spiral bevel gear (4) by hand.
3. When the backlash is too large, decrease the number of shims (5) in the left side of the spiral bevel gear, and insert the shim (5) of the same thickness as the removed ones to the opposite side. When the backlash is too small, do the opposite way to increase backlash.
4. Adjust the backlash properly by repeating the above procedure.
5. Apply red lead lightly over serveral teeth at three positins eqully spaced on the spiral bevel gear.
6. Turn the spiral bevel pinion shaft, while pressing a wooden piece against the periphery on the spiral bevel gear.
7. Check the tooth contact. If not proper adjust according to the instruction below.

	Specified
Backlash between spiral bevel gear and bevel pinion shaft	0.15 ~ 0.30 mm 0.006 ~ 0.012 in.
Rotation torque of spiral bevel gear	3.92 ~ 6.37 Nm 0.4 ~ 0.05 kgf-m 2.89 ~ 4.20 lb-ft

(Reference)

- Thickness of shims (2) - CK25/30/35

  0.1 mm (0.004 in.), 0.2 mm (0.008 in.), 0.5 mm (0.020 in.)
- Thickness of shims (2) - CK25H/30H/35H

  1.6 mm (0.063 in.), 1.8 mm (0.071 in.), 2.0 mm (0.079 in.), 2.2 mm (0.087 in.), 2.4 mm (0.094 in.)
- Thickness of shims (5)

  0.1 mm (0.004 in.), 0.2 mm (0.008 in.), 0.5 mm (0.020 in.)

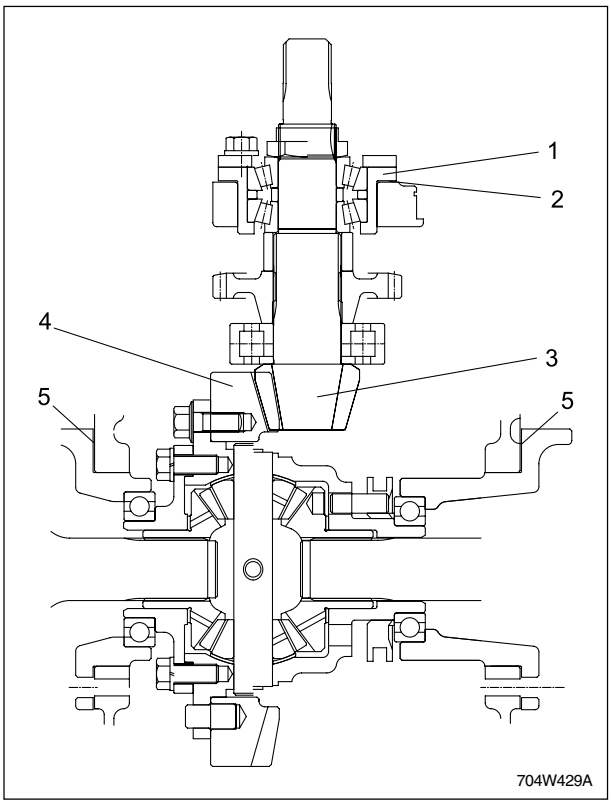

(1) Bearing Case
(2) Shim
(3) Spiral Bevel Pinion
(4) Spiral Bevel Gear
(5) Shim

A. GOOD TOOTH CONTACT

- More than 35% of the tooth contacted. The center of the tooth contact is at 1/3 of the entire width from the small end.

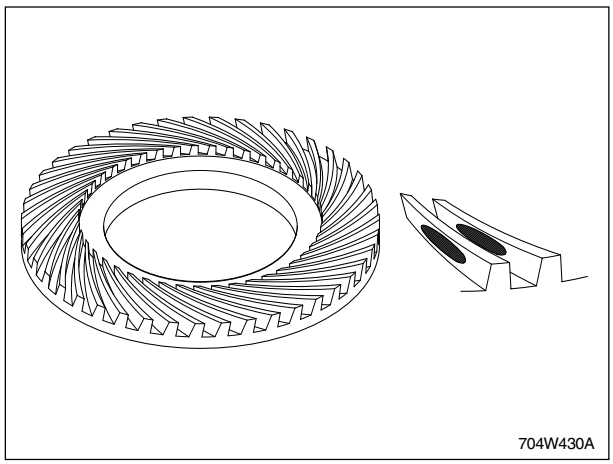

B. HEEL CONTACT, BASE CONTACT

- Replace the adjusting shim(2) with thicker one to move the spiral bevel pinion shaft backward.

  To move the spiral bevel gear leftward, reduce left side shim(5) and add shim(5) of the same thickness as the left side to right side.

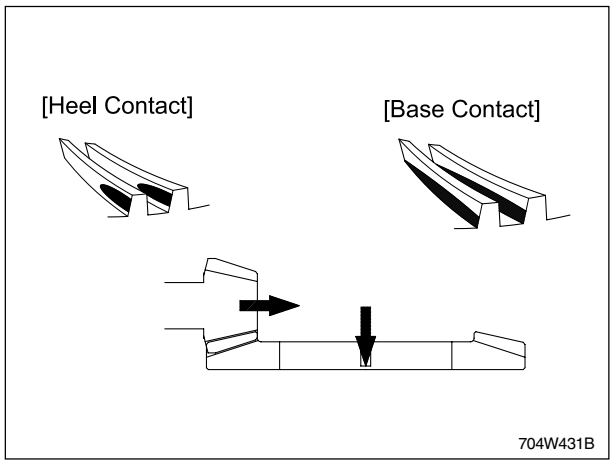

C. TOE CONTACT, TIP CONTACT

- Replace the adjusting shim(2) with thinner one to move the spiral bevel pinion shaft forward.

  To move the spiral bevel gear rightward, reduce right side shim(5) and add shim(5) of the same thickness as the right side to left side.

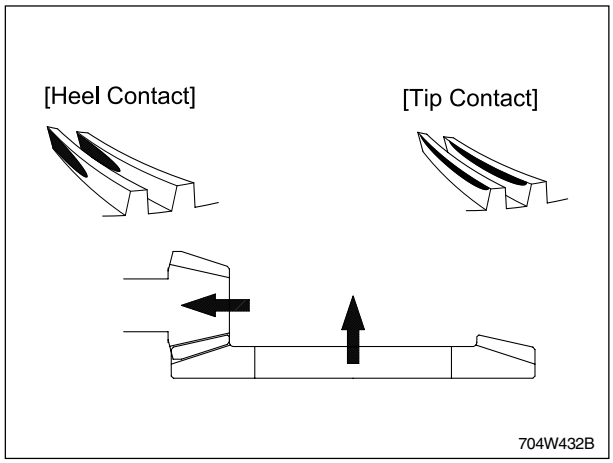

4.2.2 CLEARANCE BETWEEN DIFFERENTIAL PINION SHAFT AND DIFFERENTIAL PINION

1. Measure the differential pinion shaft O.D
2. Measure the differential pinion I.D and calculate the clearance.
3. If the clearance exceeds the allowable limit, replace them as a set.

Clearance between differential pinion shaft and differential pinion	Factory spec.	0.081 ~ 0.102 mm 0.0032 ~ 0.0040 in.
	Allowable limit	0.25 mm 0.0098 in.

Differential pinion shaft O.D	Factory spec.	19.959 ~ 19.980 mm 0.78579 ~ 0.78661 in.
Differential pinion I.D	Allowable limit	20.040 ~ 20.061 mm 0.78898 ~ 0.78980 in.

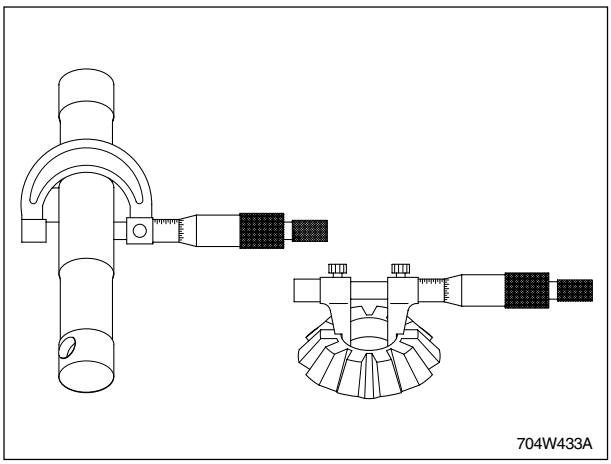
704W433A

4.2.3 BACKLASH BETWEEN DIFFERENTIAL PINION AND DIFFERENTIAL SIDE GEAR

1. Set a dial indicator (lever type) on the tooth of the differential pinion.
2. Hold the differential side gear and move the differential pinion to measure the backlash.
3. If the measurement is not within the factory specifications, adjust with the differential side gear washer.

Backlash between differential pinion and differential side gear	Factory spec.	0.15 ~ 0.30 mm 0.003 ~ 0.012 in.
	Allowable limit	0.40 mm 0.016 in.

(Reference)

- Thickness of differential side gear washers:
  1.5 mm (0.059 in.)
  1.6 mm (0.063 in.)
  1.7 mm (0.067 in.)

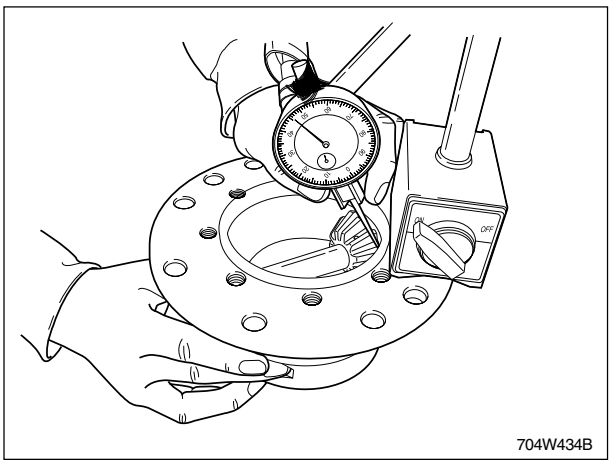
704W434B

4.2.4 CLEARANCE BETWEEN DIFFERENTIAL CASE BORE (DIFFERENTIAL CASE COVER BORE) AND DIFFERENTIAL SIDE GEAR BOSS

1. Measure the bore I.D. of the differential case and the differential case cover.
2. Measure the differential side gear boss O.D. and calculate the clearance.
3. If the clearance exceeds the allowable limit, replace them.

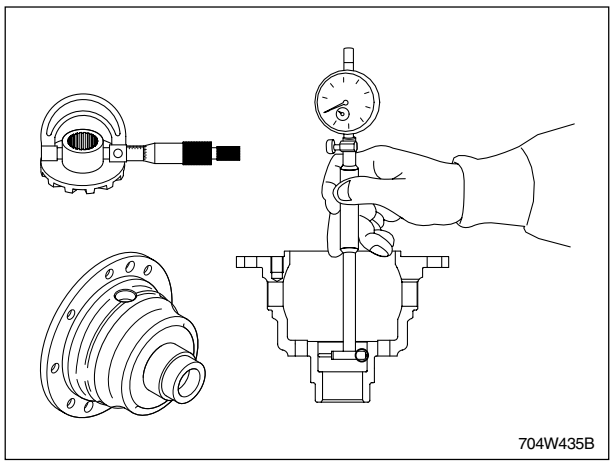

Clearance between differential case bore and differential side gear boss	Factory spec.	0.05 ~ 0.151 mm 0.00197 ~ 0.00594 in.
	Allowable limit	0.035 mm 0.0138 in.

Clearance between differential case bore and differential side gear boss	Factory spec.	40.5000 ~ 40.550 mm 1.59449 ~ 1.59646 in.
	Allowable limit	40.388 ~ 40.450 mm 1.59008 ~ 1.59252 in.

Clearance between differential case cover bore and differential side gear boss	Factory spec.	0.05 ~ 0.151 mm 0.00197 ~ 0.00594 in.
	Allowable limit	0.035 mm 0.0138 in.

Differential case cover bore I.D	Factory spec.	40.500 ~ 40.562 mm 1.5945 ~ 1.5969 in.
Differential side gear bore O.D	Allowable limit	40.411 ~ 40.450 mm 1.5910 ~ 1.5925 in.

4.2.5 BEARING CHECK

1. With bearing inner wheel seized, move the outer wheel in and out, and left and right. Check for wear and looseness.
2. Apply transmission oil to the bearing balls. With bearing inner wheel seized and outer wheel rotated, check for abnormal noise and operation.
3. If damage and failure found, replace it.

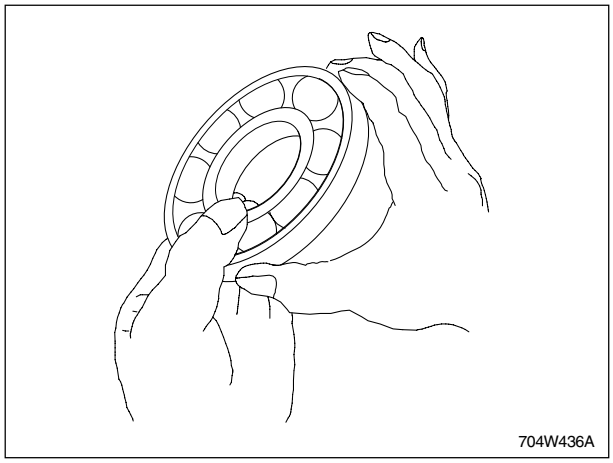

4.2.6 GEAR CHECK

1. Inspect slip and tooth surface for worn. Replace it if necessary.

4.2.7 CHECKING FOR CLEARANCE BETWEEN TRANSMISSION FORK AND SHIFT GROOVE

1. Measure groove depth of the transmission shift using an I.D. micrometer.
2. Measure the depth of transmission fork hook using an O.D. micrometer.
3. Check the measured clearance against the following chart. Replace it if the limit is exceeded.

Sect.	Specified	Limit
Clearance of between Transmission fork and Shift groove	0.1 ~ 0.3 mm 0.004 ~ 0.012 in.	0.8 mm 0.031 in.

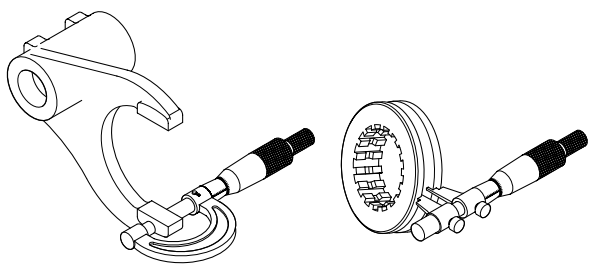

704W437A

4.2.8 CLEARANCE BETWEEN GEAR AND SPLINE OR HUB AND SPLINE

1. Select the gear or the hub in a vise.
2. Set a dial gauge (lever type) with its finger on the spline.
3. Move the shaft (or hub) to measure the clearance.
4. If the clearance exceeds the allowable limit, replace them.

Clearance between gear and spline or hub and spline	Factory spec.	0.030 ~ 0.078 mm 0.00118 ~ 0.00307 in.
	Allowable limit	0.2 mm 0.008 in.

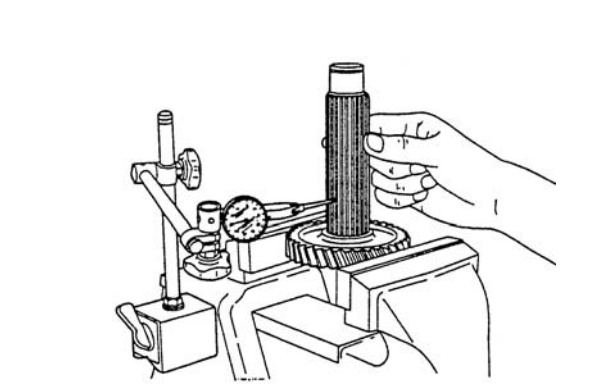

704W438A

4.2.9 SYNCHRO ASSEMBLY CHECK

1. Check synchronizer key and spring for damage and replace it if necessary.
2. With synchronizer ring contacted with the taper cone of the opposite gear, measure the clearance between the synchro spline and the opposite gear spline using a clearance gauge.

Sect.	Specified	Allowable Limit
Clearance between synchro and gear spline(A)	1.35 ~ 1.65 mm 0.053 ~ 0.065 in.	0.5 mm 0.02 in.

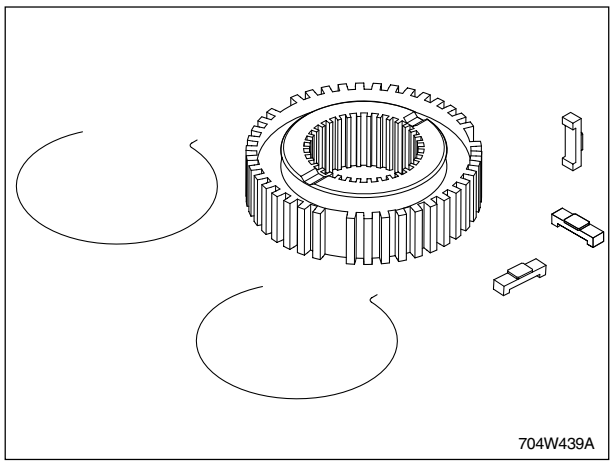

3. Apply a thin film of red leas to the O.D. of the taper cone in the gear. Tighten the synchronizer ring firmly, and check for contacted state.

Sect.	Specified	Allowable Limit
Clearance between synchronizer ring and gear taper.	More than 80%	More than 80%

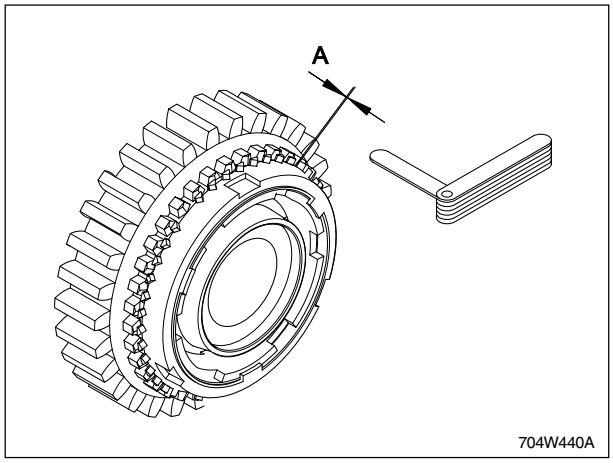

MEMO

CK25/27/30/35

HST

TABLE OF CONTENTS

1. SPECIFICATIONS 5-2

2. OPERATING PRINCIPLE 5-3

2.1 Power train diagram 5-3

2.2 Structure 5-5

2.2.1 Appearance (hydrostatic transmission) and circuit 5-5

2.3 Function of each component 5-7

2.2.1 Hydraulic pump 5-7

2.2.2 Hydraulic motor 5-7

2.2.3 Charge pump 5-8

2.2.4 High-pressure relief valve 5-8

2.2.5 Neutral valve 5-9

2.4 Operation control 5-10

2.4.1 Neutral (HST pedal: stop) 5-10

2.4.2 Forward 5-11

2.4.3 Reverse 5-12

2.4.4 Control linkage 5-13

3. TROUBLESHOOTING 5-14

4. SERVICING 5-17

4.1 Exploded view and component disassembly 5-17

4.1.1 Disassembling 5-19

4.1.2 Assembling 5-19

4.2 Disassembling transmission for HST model 5-21

4.2.1 Draining the transmission fluid 5-21

4.2.2 Bonnet 5-22

4.2.3 Hydraulic tube and electric wiring 5-22

4.2.4 Propeller shaft 5-23

4.2.5 Separating engine & clutch housing 5-23

4.2.6 Step mat, splashboard 5-24

4.2.7 Frame assy 5-24

4.2.8 Rops 5-24

4.2.9 Seat, levers 5-25

4.2.10 Fender 5-25

4.2.11 Front cover, step 5-25

4.2.12 Joystick valve, etc 5-26

4.2.13 HST damper assembly 5-26

4.2.14 Disassembling the clutch housing and middle case 5-27

4.2.15 Disassembling the HST assembly 5-28

4.2.16 Disassembling middle case from T/M case 5-29

4.2.17 Disassembling range shift shaft group 5-30

4.2.18 Disassembling spiral bevel pinion 5-31

4.2.19 Rear PTO 5-31

4.2.20 Mid PTO 5-31

4.2.21 Separation of differential gear assembly 5-31

4.2.22 Disassembly of differential gear 5-31

4.2.23 Assembling and adjustment the HST pedal damper assembly 5-32

1. SPECIFICATIONS

Item		Reference Value		Allowable Limit
		CK25H/27H/30H	CK35H	
Displacement	Pump	0 ~ 23.3 cc/rev	0 ~ 28.1 cc/rev	-
	Motor	23.3 cc/rev	28.1 cc/rev	-
Angle of swash plate	Pump	± 18°	←	-
	Motor	0°	←	-
Charge pump displacement		6.2 cc/rev	←	-
Maximum working pressure (Relief setting pressure)		280 kgf/cm²	300 kgf/cm²	-
Maximum input rpm		3,000 rpm	←	-
Theoretical output rpm		0 ~ 3,000 rpm	←	-
Charge relief pressure		5 ~ 7 kgf/cm²	←	-
Spiral bevel gear pinion turning torque		0.1 ~ 0.13 kgf-m	←	-
PTO shaft lock nut tightening torque		15 ~ 20 kgf-m	←	-
Backlash between	Differential pinion to differential side gear	0.15 ~ 0.25 mm 0.0059 ~ 0.0098 in.	←	-
	Differential washer thickness	1.5, 1.6, 1.7 mm 0.0591, 0.0630, 0.0669 in.	←	-
Spiral bevel gear turning torque		0.4 ~ 0.65 kgf-m	←	-
Adjusting shims thickness		0.1, 0.2, 0.5 mm 0.0039, 0.0078, 0.0197 in.	←	-
Backlash between spiral bevel pinion gear and spiral bevel gear		0.15 ~ 0.25 mm 0.0059 ~ 0.0098 in.	←	-

2. OPERATING PRINCIPLE

2.1 POWER TRAIN DIAGRAM

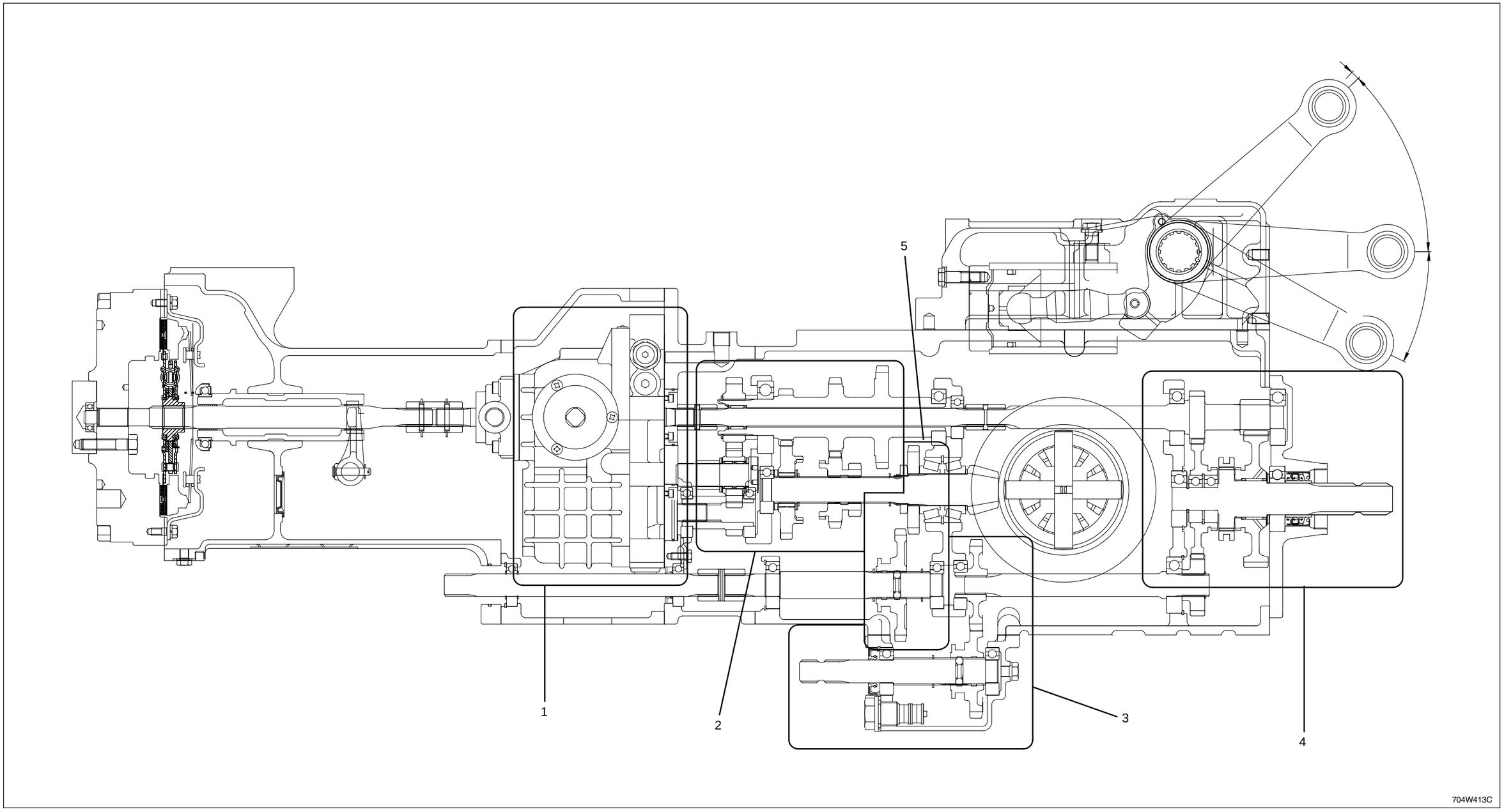

(1) Hydraulic Transmission Section
(2) Range Gear Shift Section
(3) Mid PTO Drive Section
(4) Rear PTO Shift Section
(5) Front Wheel Drive Section

2.2 STRUCTURE

- HST is directly linked to the transmission case, and it consists of one variable displacement piston pump, connected to one fixed type piston motor, oil filter, charge pump, charge relief valve, check valve, high-pressure relief valve, and neutral valve.
- The pump converts the rotation of the engine to hydraulic pressure that lets the motor operate; accordingly the motor produces the output rotation.
- The rotational direction and speed of the output shaft is dependent on the changes of hydraulic oil path that moves the swash plate controlled by HST pedal in footwall.
- Various hydraulic devices share the oil tank, but the HST uses a dedicated oil filter due to it's need for especially clean oil.

2.2.1 APPEARANCE (HYDROSTATIC TRANSMISSION) AND CIRCUIT

CK25H / 27H / 30H

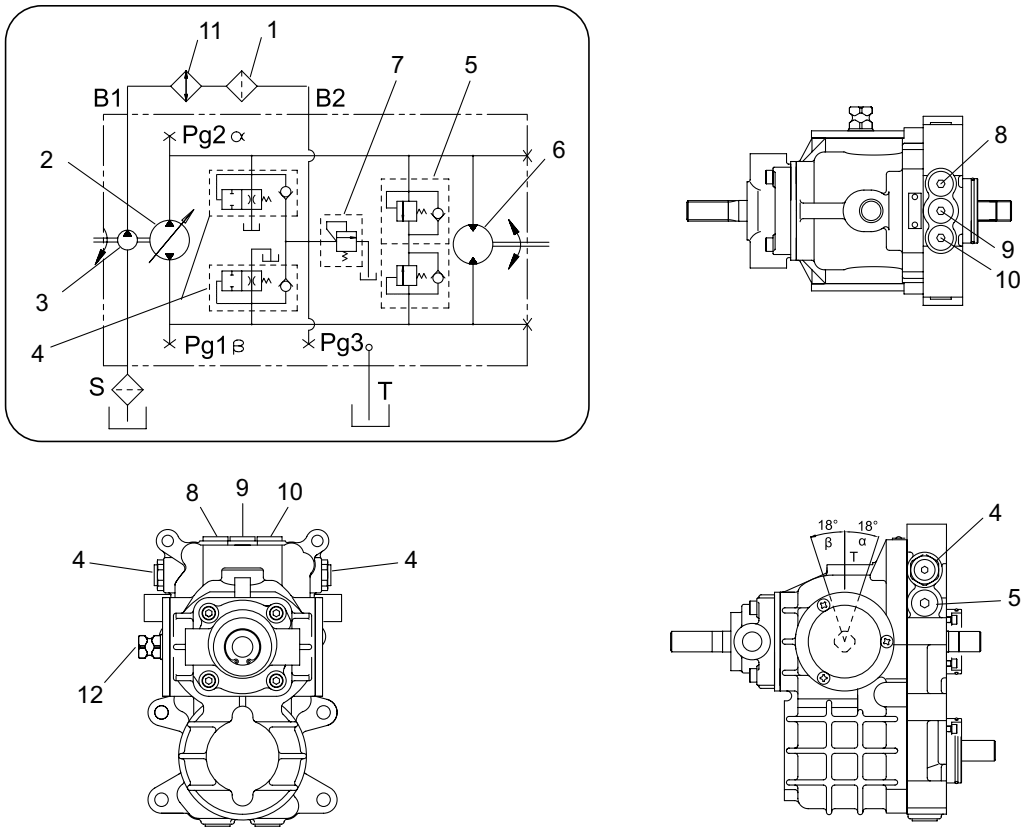

(1) HST Filter
(2) Pump Cylinder Block
(3) Charge Pump
(4) Neutral Valve
(5) Relief. Valve (LH, RH)
(6) Fixed Piston Motor
(7) Charge Relief V/V
(8) Relief Pressure Test Port (Back Ward)
(9) Charge Pressure Test Port
(10) Relief Pressure Test Port (Forward)
(11) Oil Cooler

CK35H

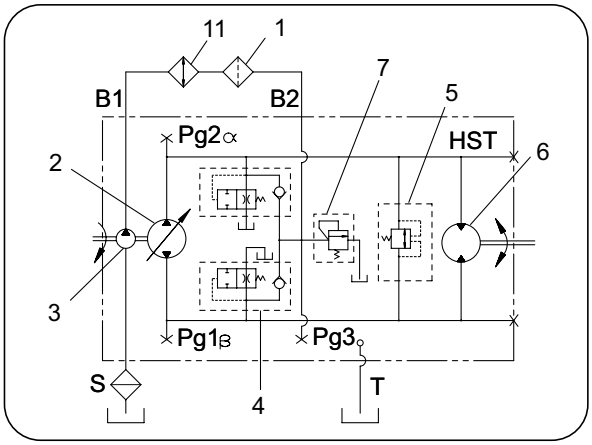

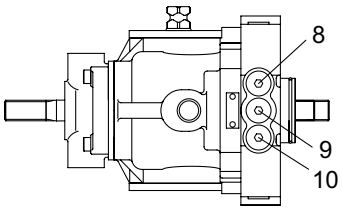

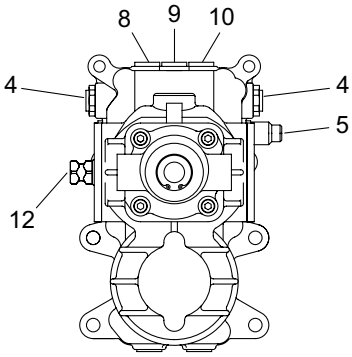

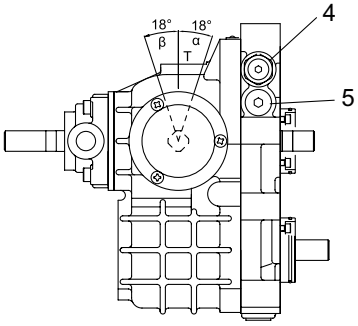

704W414B

(1) HST Filter
(2) Pump Cylinder Block
(3) Charge Pump
(4) Neutral Valve
(5) Relief. Valve (LH, RH)
(6) Fixed Piston Motor
(7) Charge Relief V/V
(8) Relief Pressure Test Port (Back Ward)
(9) Charge Pressure Test Port
(10) Relief Pressure Test Port (Forward)
(11) Oil Cooler

2.3 FUNCTION OF EACH COMPONENT

2.3.1 HYDRAULIC PUMP

This is an axial piston pump with rotating swash plate (variable displacement type).

The cylinder block with swash plate is rotated by the drive shaft. The angle of the swash plate determines the stroke of the pistons. The oil comes in and out through the inlet and outlet port in the valve plate at every 180°.

By adjusting the angle of the swash plate with the trunnion shaft, the amount of displacement can be changed. In addition , the displacement direction can be changed by the angle of the swash plate. When changing the displacement direction, the rotational direction of the motor can be changed (forward and reverse).

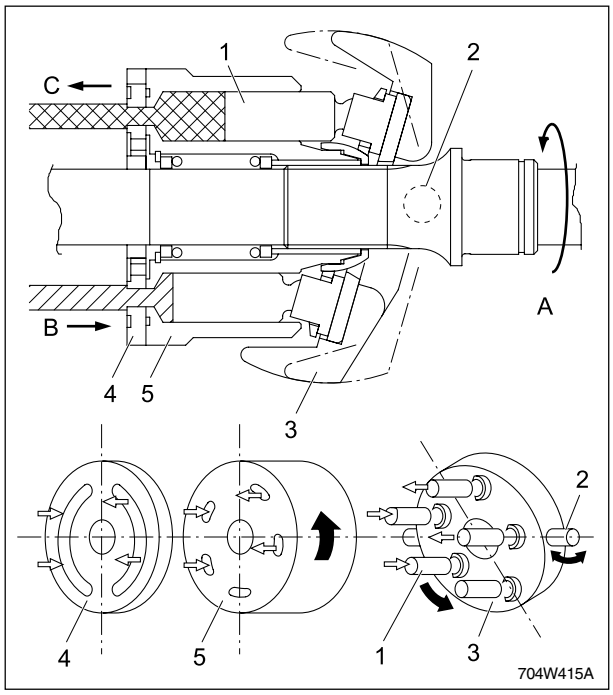

(1) Piston
(2) Trunnion Shaft
(3) Swash Plat
(4) Valve Plate
(5) Cylinder Block

(A) Input Shaft
(B) Inlet Port
(C) Outlet Port

2.3.2 HYDRAULIC MOTOR

This is an axial piston motor with fixed swash plate (fixed displacement type).

The oil pressure from the hydraulic pump pushes the piston against the angled swash plate and therefore the pistons slide down along with the slanted surface. Due to this, the cylinder block and output shaft assembly, with pistons is rotated. The angle of the swash plate determines the stroke of the pistons and the oil comes in and out through the inlet and outlet port in valve plate at every 180 degree.

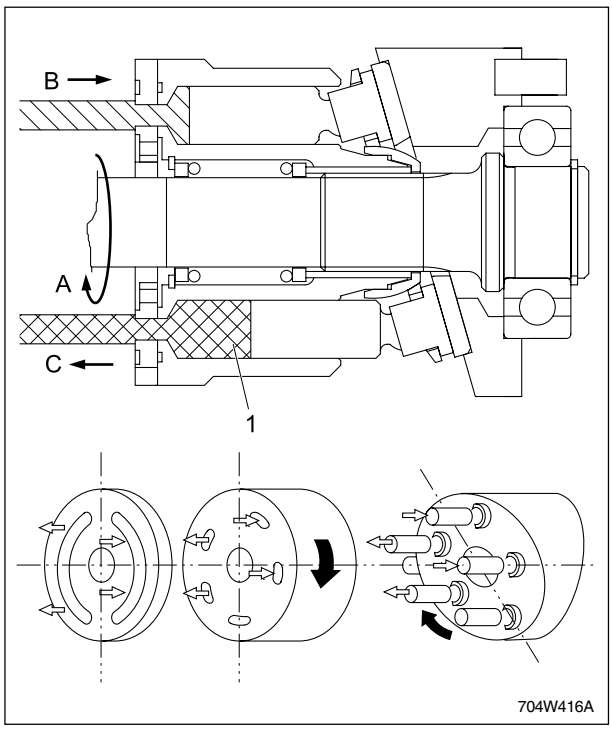

(1) Piston

(A) Input Shaft
(B) Inlet Port
(C) Outlet Port

2.3.3 CHARGE PUMP

Some internal leaks exist in pump and motor even though they are connected each other with a closed circuit. The torocoid pump is installed as a charge pump to compensate for the leaks. The oil filter is installed at the outlet side of the pump.

The displaced oil from charge pump flows into the main circuit through the check valve of the low-pressure circuit to compensate for the leaks. The pressure of the supplied oil from charge pump to the low-pressure circuit is limited by the charge relief valve. The excessive oil returns to the oil tank through charge relief valve, pump and motor case (HST case).

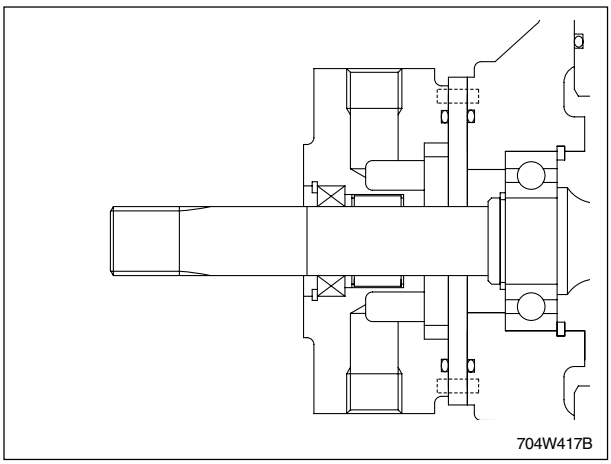

2.3.4 HIGH-PRESSURE RELIEF VALVE

When the output shaft is overloaded, to avoid damage to machine, this valve operates to return the high-pressure oil to tank.

CK25H/27H/30H

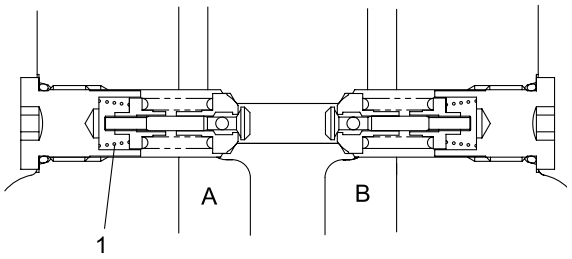

(1) Relief Valve Ass'y

(A) Revers High-Pressure Line

(B) Forward High-Pressure Line

CK35H

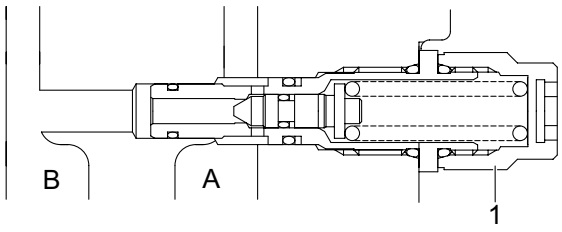

(1) Relief Valve Ass'y

(A) Forward High-Pressure Line

(B) Reverse High-Pressure Line

2.3.5 NEUTRAL VALVE

The neutral valve is a valve that keep the neutral position during starting.

When the swash plate's angle and discharge volume become smaller, the motor does not rotate because the oil flows into the inner passage of the case (passage B-drain circuit) via orifice.

(Secures neutral width)

As the swash plate's angle increases, the oil volume passing the orifice also increases causing high pressure drops before and after the orifice.

According to pressure differences generated at this moment, the oil pressure overrides the spring force. The valve moves left by blocking contacts between passages A and B.

Accordingly, the discharged oil from the pump that was flowing toward the drain circuit (passage B) flows into the motor causing its rotation.

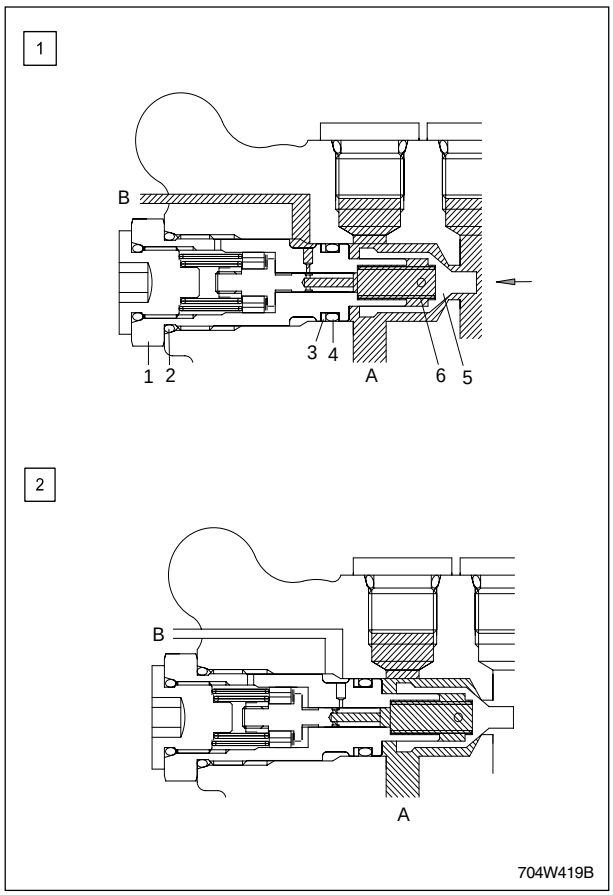

(1) Neutral Valve Ass'y
(2) O-ring
(3) Backup Ring
(4) O-ring
(5) Check
(6) Check Valve Spring

2.4 OPERATION CONTROL

2.4.1 NEUTRAL (HST PEDAL: STOP)

When the swash plate control lever is in the neutral position, the sliding surface of the swash plate will be vertical against piston. Then the cylinder block rotates with the input shaft and the piston stroke becomes zero. Accordingly, the output shaft does not rotate because the pump does not discharge oil and the motor does not rotate.

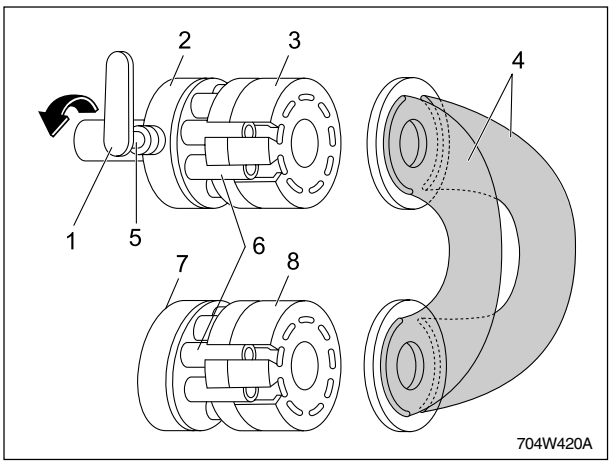

(1) Swach Plate Angle Control Lever
(2) Running Swash Plate
(3) Cylinder Block (Pump)
(4) Main Circuit
(5) Trunnion Shaft
(6) Piston
(7) Fixed Swash Plate (Motor)
(8) Cylinder Block

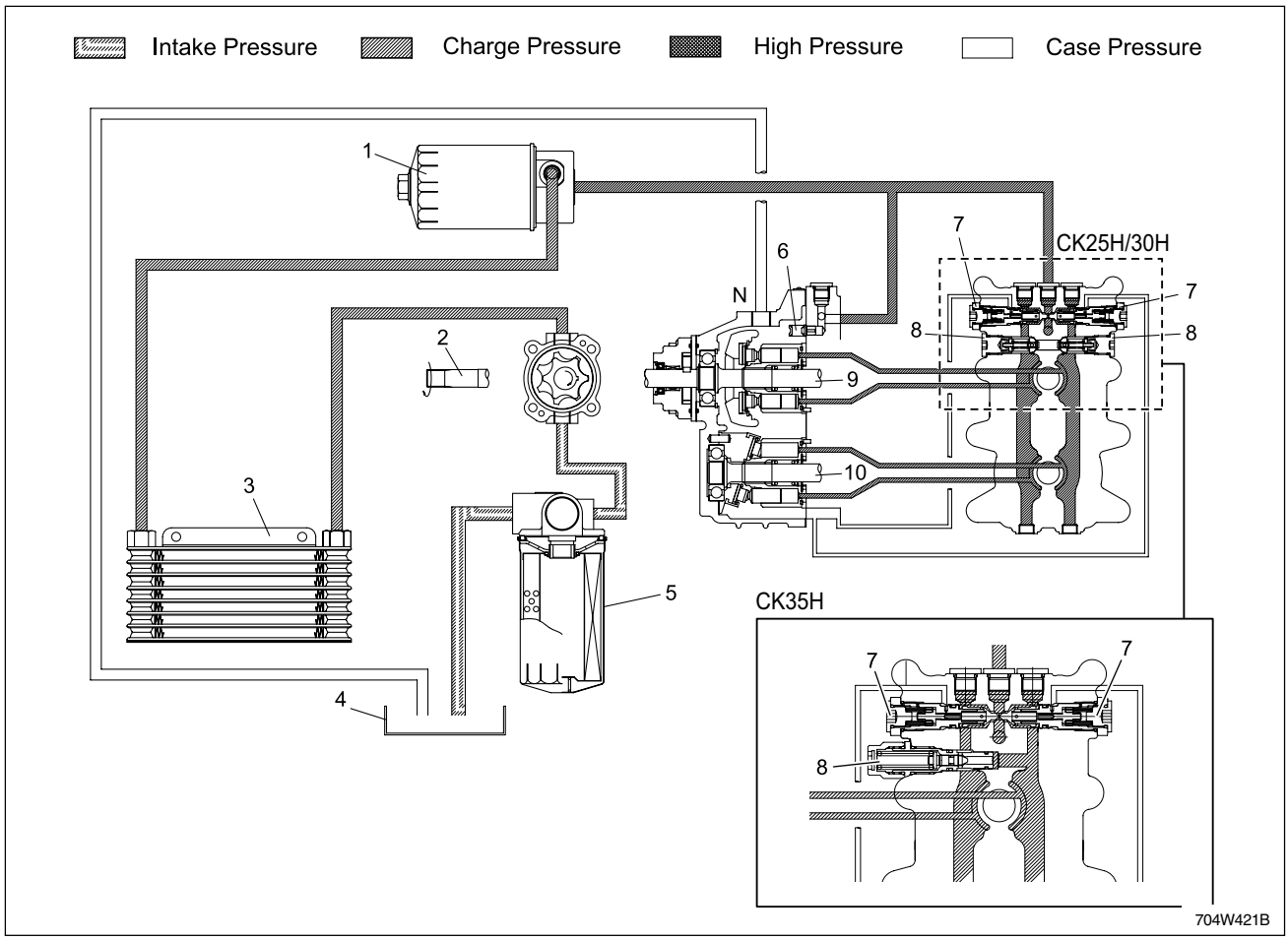

(1) HST Hydraulic Filter
(2) Input Shaft
(3) Oil Cooler
(4) Oil Tank (T/M Case)
(5) Hydraulic Oil Filter
(6) Charge Relief Valve
(7) Neutral Valve
(8) High Pressure Relief Valve
(9) Input Shaft
(10) Output Shaft

2.4.2 FORWARD

When the swash plate control lever is moved left, the running swash plate will be angled as illustrated. The cylinder block is connected with the input shaft and it rotates with the input shaft. When the cylinder block rotates past the pump port A, oil comes in through piston port. It continues to rotate, the oil is discharged through pump port B.

When the oil is supplied to motor port B, oil pressurizes the piston by increasing the pressure. Then the piston pushes against the fixed swash plate causing the swash plate to slide.

The piston tends to rotate the cylinder block because it is attached to the cylinder block. The cylinder block rotates the output shaft.

If the cylinder block continues to rotate, the oil will be discharged through motor port A at a low pressure and then return to pump port A.

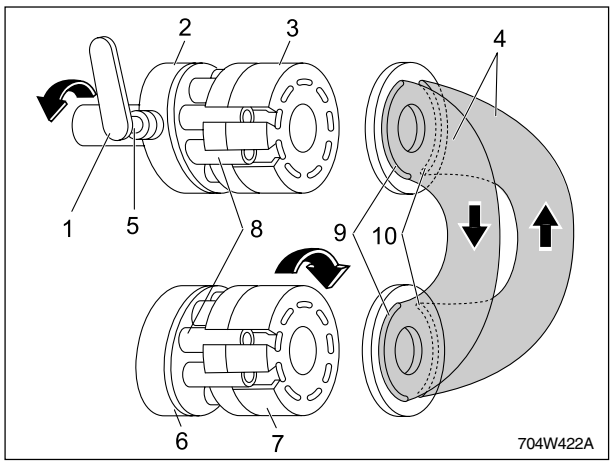

(1) Swach Plate Angle Control Lever
(2) Running Swash Plate
(3) Cylinder Block
(4) Main Circuit
(5) Trunnion Shaft
(6) Fixed Swash Plate
(7) Cylinder Block
(8) Piston
(9) Port B
(10) Port A

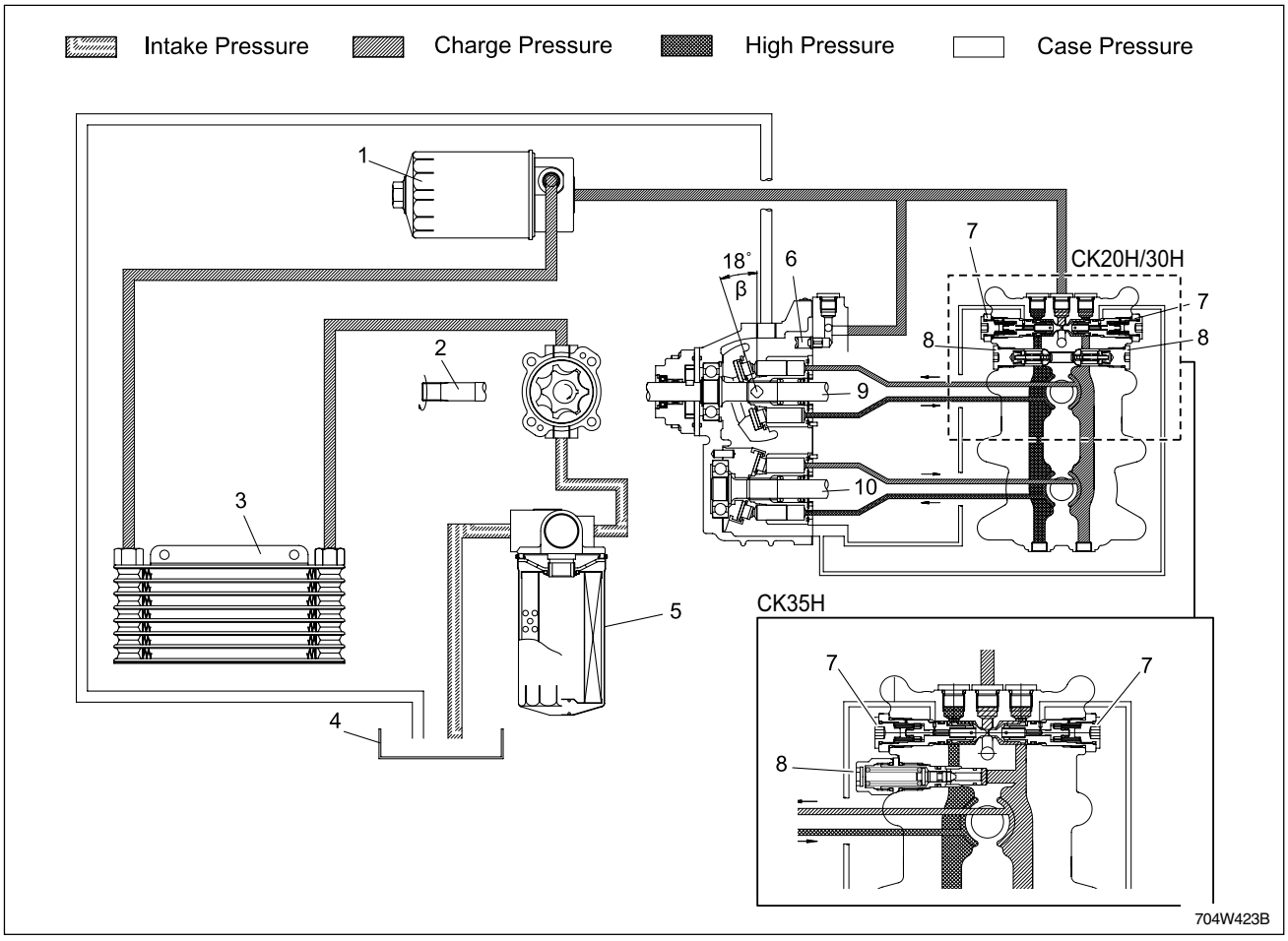

(1) HST Hydraulic Filter
(2) Input Shaft
(3) Oil Cooler
(4) Oil Tank (T/M Case)
(5) Hydraulic Oil Filter
(6) Charge Relief Valve
(7) Neutral Valve
(8) High Pressure Relief Valve
(9) Input Shaft
(10) Output Shaft

2.4.3 REVERSE

When the swash plate control lever is moved left, the running swash plate will be angled as illustrated. The cylinder block is connected to the input shaft. It rotates with the input shaft. When the cylinder block rotates past the pump port B, oil comes in through the piston port. As it continues to rotate, the oil will be discharged through pump port A.

When the oil is supplied to motor port A, oil pressurizes the piston by increasing the pressure then the piston pushes against fixed swash plate causing a sliding of the swash plate.

The piston tends to rotate the cylinder block because it is attached to the cylinder block. The cylinder block rotates the output shaft.

If the cylinder block continues to rotate, the oil will be discharged through motor port B at a low pressure and then return to pump port B.

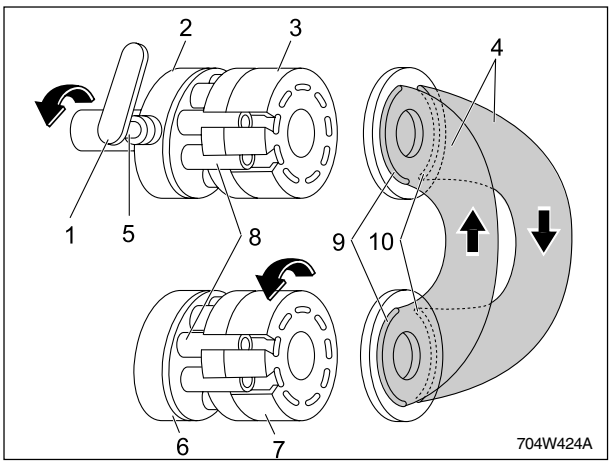

(1) Swach Plate Angle Control Lever
(2) Running Swash Plate
(3) Cylinder Block
(4) Main Circuit
(5) Trunnion Shaft
(6) Fixed Swash Plate
(7) Cylinder Block
(8) Piston
(9) Port B
(10) Port A

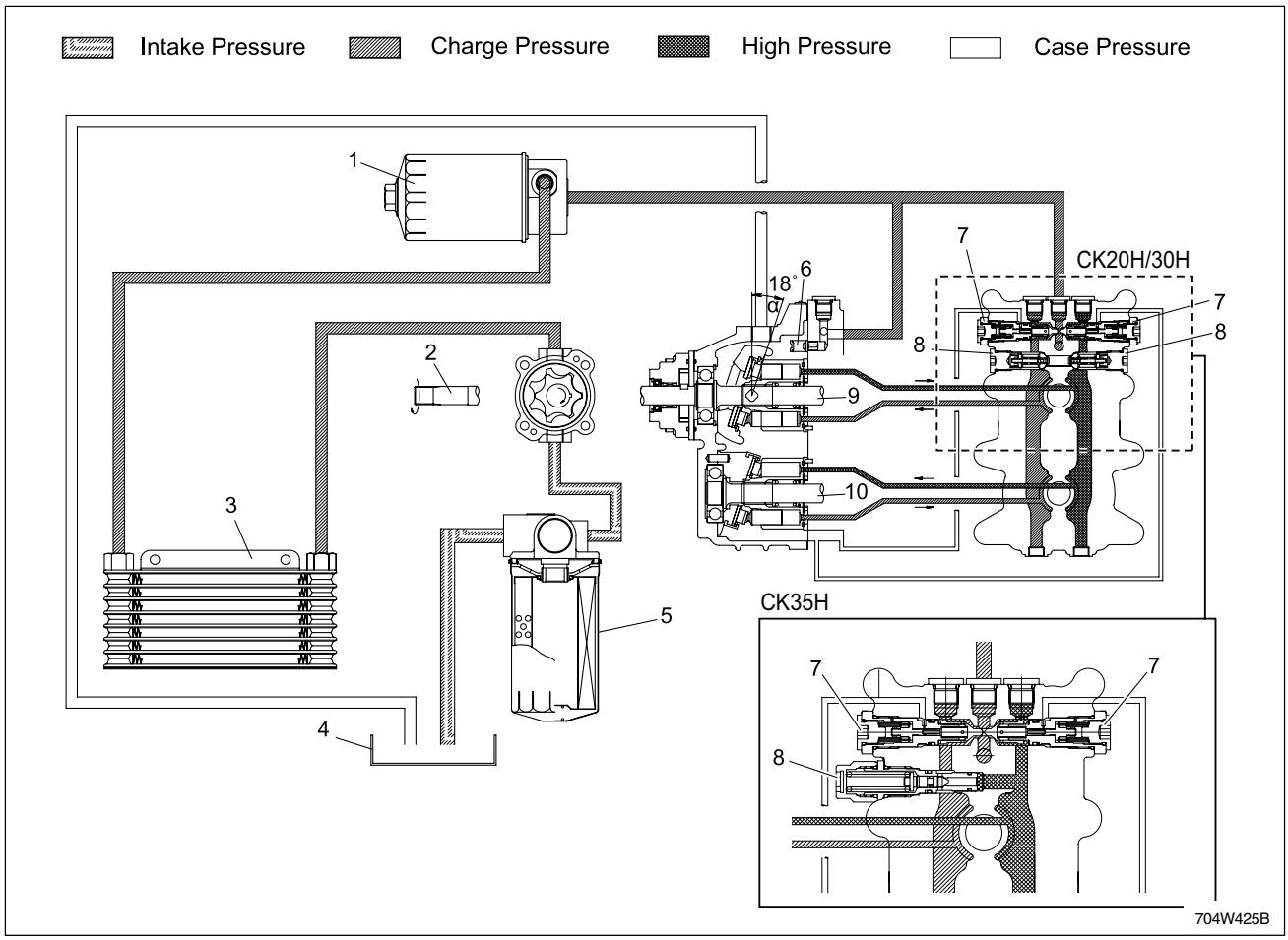

(1) HST Hydraulic Filter
(2) Input Shaft
(3) Oil Cooler
(4) Oil Tank (T/M Case)
(5) Hydraulic Oil Filter
(6) Charge Relief Valve
(7) Neutral Valve
(8) High Pressure Relief Valve
(9) Input Shaft
(10) Output Shaft

2.4.4 CONTROL LINKAGE

When the pedal is depressed in normal operating condition (for forward and reverse driving), only the joint (1) and the connector plate (5) operate. The components other than these operate only when the cruise function is active (for the HST models).

As the front of the pedal is depressed, the swash plate rotates, and forward traveling speed increases.

Depressing the rear end increases the reverse speed. The joint (1) is returned to neutral position by the tension of the spring in the damper assembly (3) and the damper cylinder assembly (9).

At the same time, the swash plate is returned to neutral, when the pedal is released.

The damper assembly (3) is connected to the HST pedal. It restricts the movement of the linkage to prevent abrupt operation or reversing.

(1) Joint
(2) HST Pedal
(3) Damper Assembly
(4) Sector Lachat (old: drum)
(5) Connector Plate
(6) Lock Lachat (old: rubber shoe)
(7) Connecting Lever
(8) Lock Shaft
(9) Damper Cylinder Assembly

(A) Forward (B) Reverse

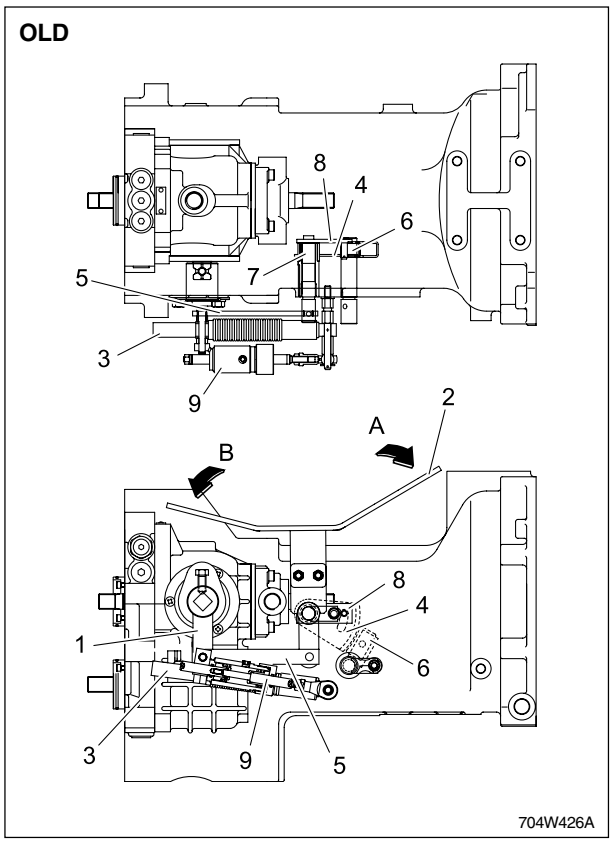

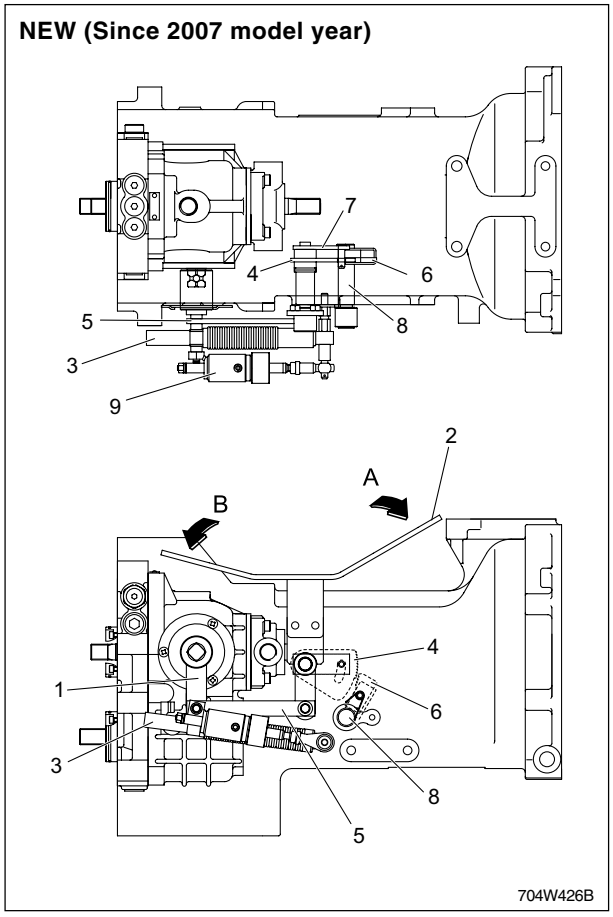

3. TROUBLESHOOTING

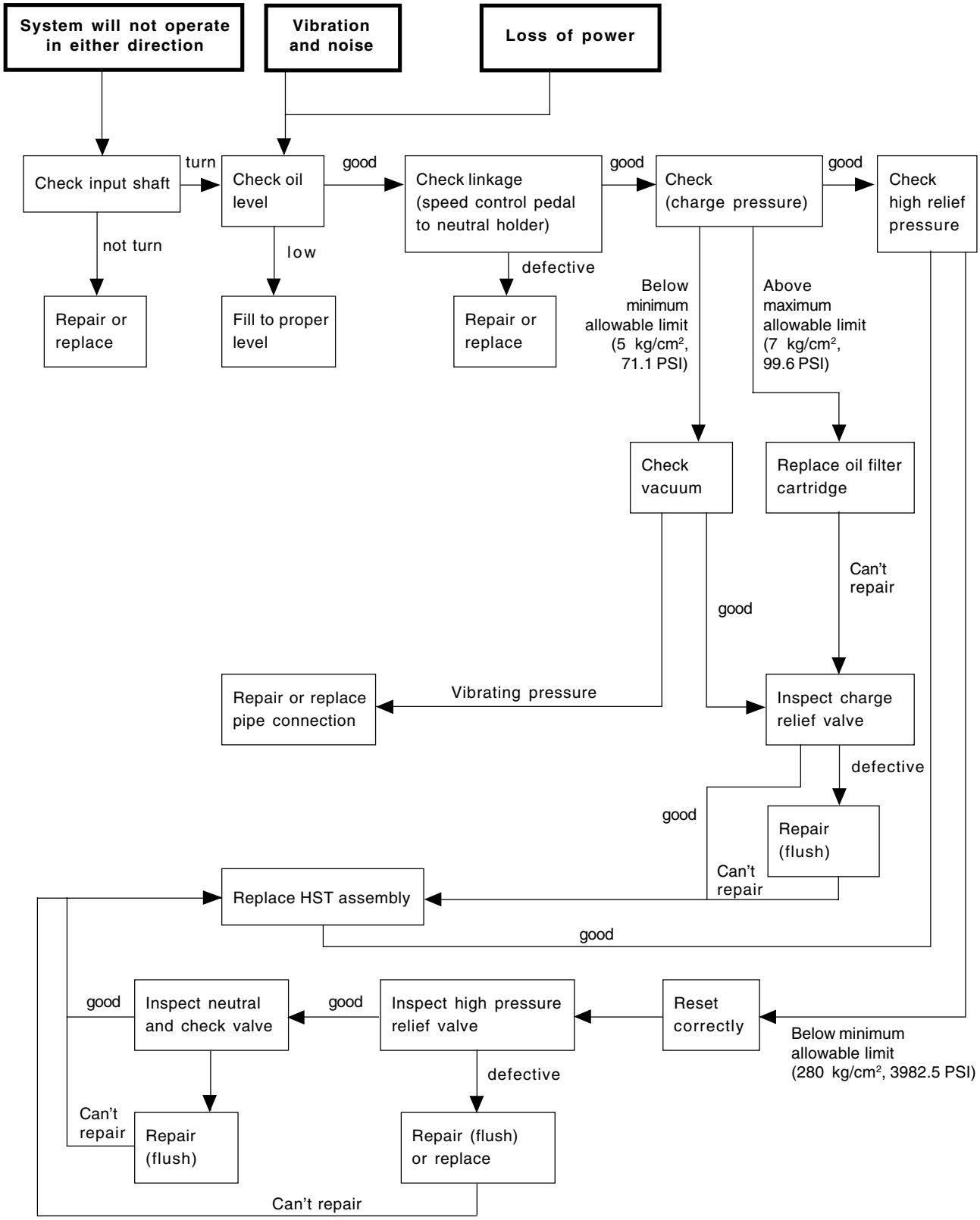

▶ **CONTINUED**

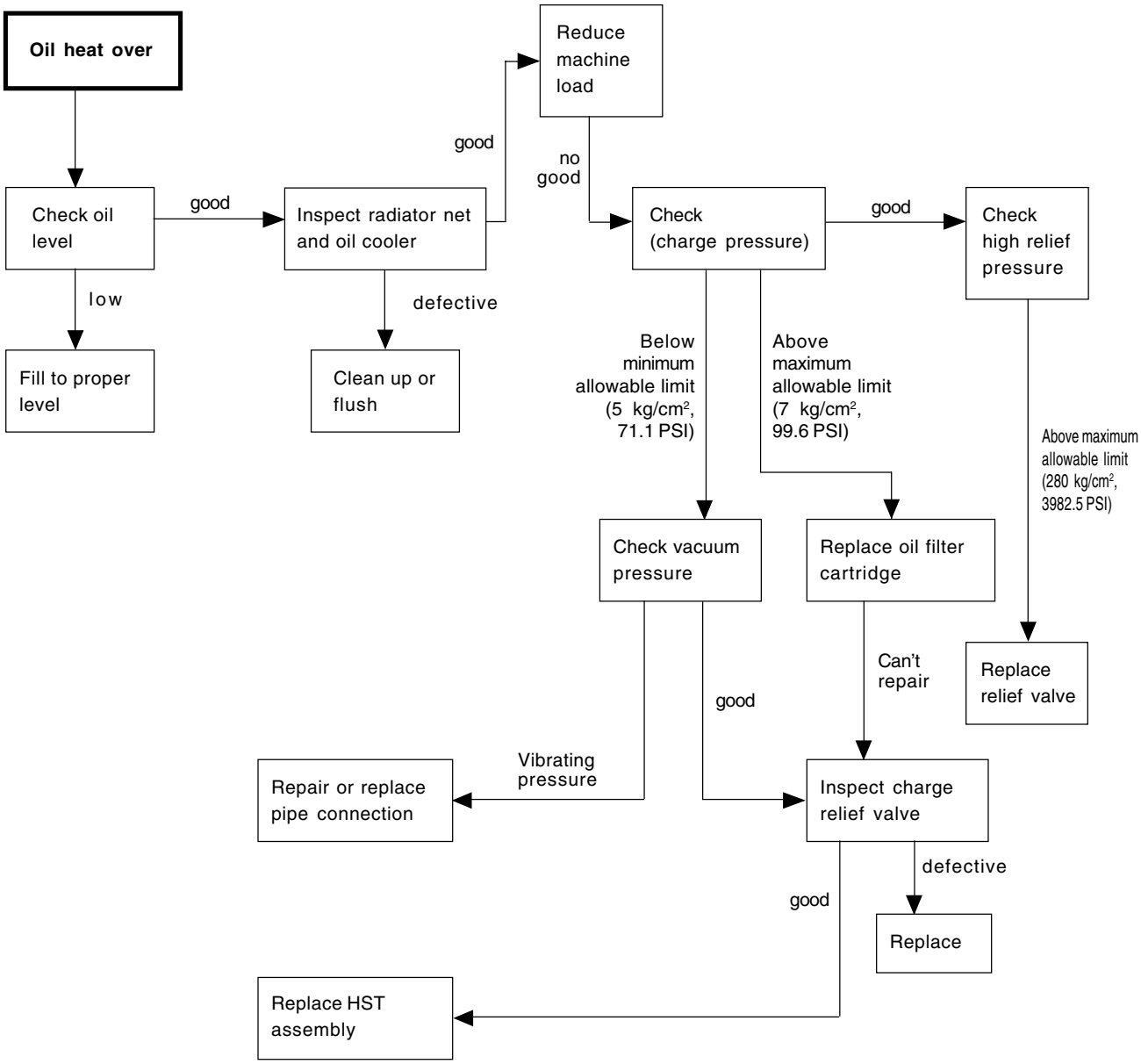
Oil heat over
Check oil level
good
Inspect radiator net and oil cooler
good
Reduce machine load
no good
Check (charge pressure)
good
Check high relief pressure
low
Fill to proper level
defective
Clean up or flush
Below minimum allowable limit (5 kg/cm², 71.1 PSI)
Above maximum allowable limit (7 kg/cm², 99.6 PSI)
Above maximum allowable limit (280 kg/cm², 3982.5 PSI)
Check vacuum pressure
Replace oil filter cartridge
Can't repair
Replace relief valve
good
Vibrating pressure
Repair or replace pipe connection
Inspect charge relief valve
defective
good
Replace
Replace HST assembly

▶ **CONTINUED**

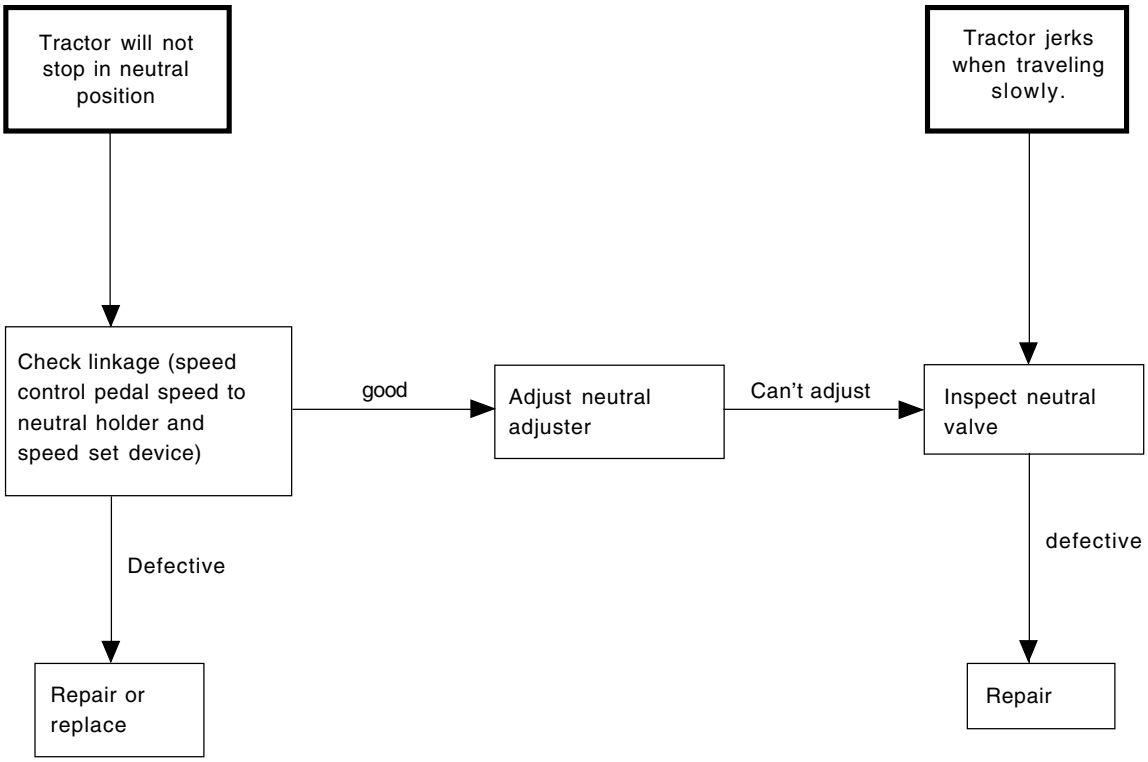
Tractor will not stop in neutral position
Check linkage (speed control pedal speed to neutral holder and speed set device)
good
Adjust neutral adjuster
Can't adjust
Inspect neutral valve
defective
Repair
Defective
Repair or replace
Tractor jerks when traveling slowly.

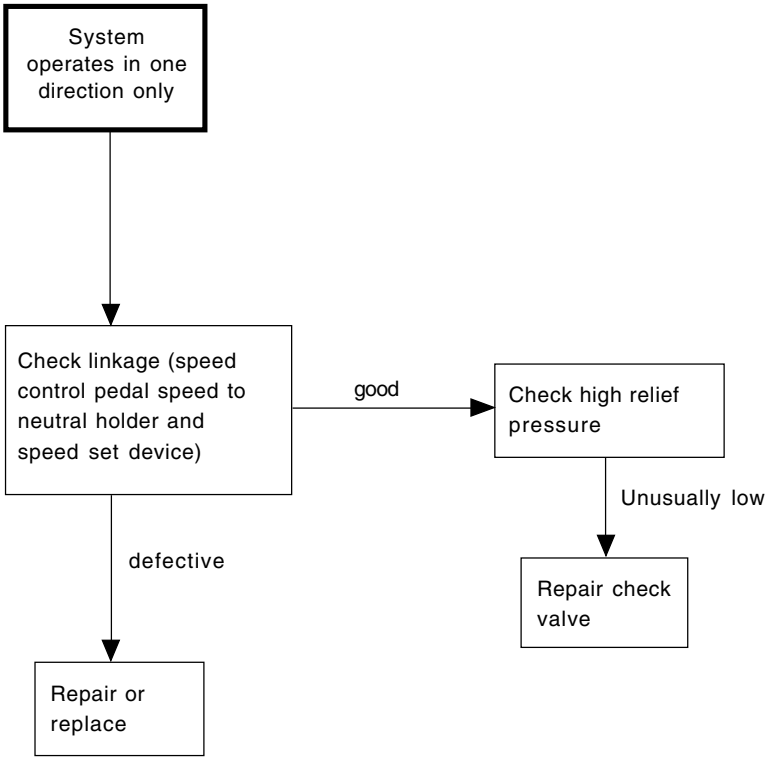
System operates in one direction only
Check linkage (speed control pedal speed to neutral holder and speed set device)
good
Check high relief pressure
Unusually low
Repair check valve
defective
Repair or replace

4. SERVICING

4.1 EXPLODED VIEW AND COMPONENT DISASSEMBLY

▶ **CK25H/CK27H/CK30H**

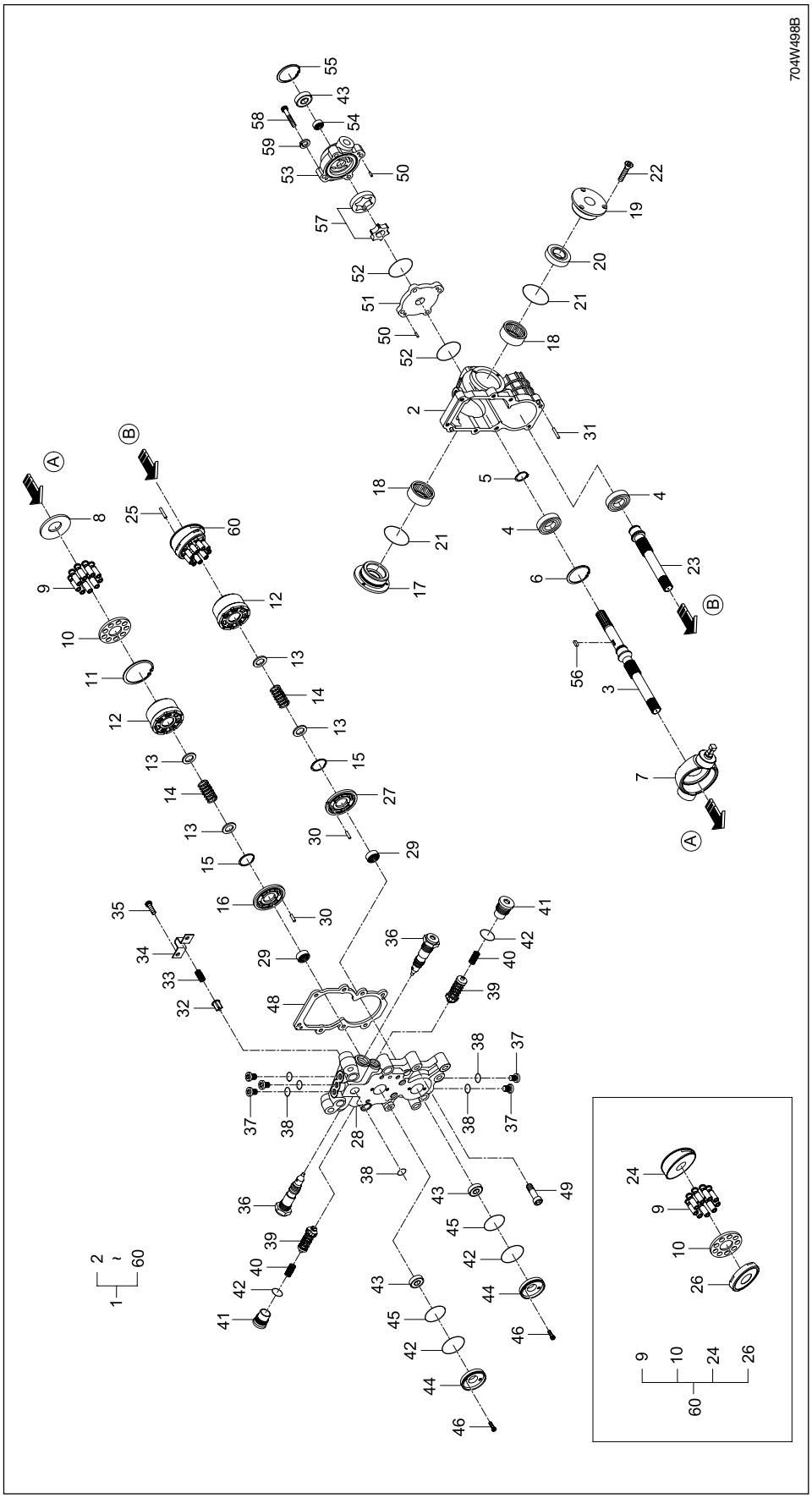

(1) Hst Ass'y
(2) Body
(3) Shaft
(4) Ball Bearing
(5) Snap Ring
(6) Snap Ring
(7) Swash Plate
(8) Shoe Plate
(9) Piston Ass'y
(10) Set Plate
(11) Snap Ring
(12) Cylinder Block
(13) Spring Seat
(14) Sprin
(15) Snap Ringg
(16) Valve Plate (P/P)
(17) Cover B
(18) Dx-bearing
(19) Cover A
(20) Oil Seal
(21) O-ring
(22) Screw
(23) Shaft (Motor)
(24) Swash Plate (Motor)
(25) Pin
(26) Retainer Holder
(27) Valve Plate (Motor)
(28) Front Cover
(29) Needle Bearing
(30) Pin
(31) Pin
(32) Check
(33) Spring
(34) Spring Holder
(35) Wrench Bolt
(36) Neutral Valve Ass'y
(37) Plug
(38) O-ring
(39) Relief Valve Ass'y
(40) Spring
(41) Plug
(42) O-ring
(43) Oil Seal
(44) Cover
(45) O-ring
(46) Wrench Bolt
(47) O-ring
(48) Gasket
(49) Wrench Bolt
(50) Pin
(51) Plate
(52) O-ring
(53) Casing
(54) Needle Bearing
(55) Snap Ring
(56) Key
(57) Gerotor
(58) Wrench Bolt
(59) Spring Washer
(60) Swash Plate Ass'y

▶ **CK35H**

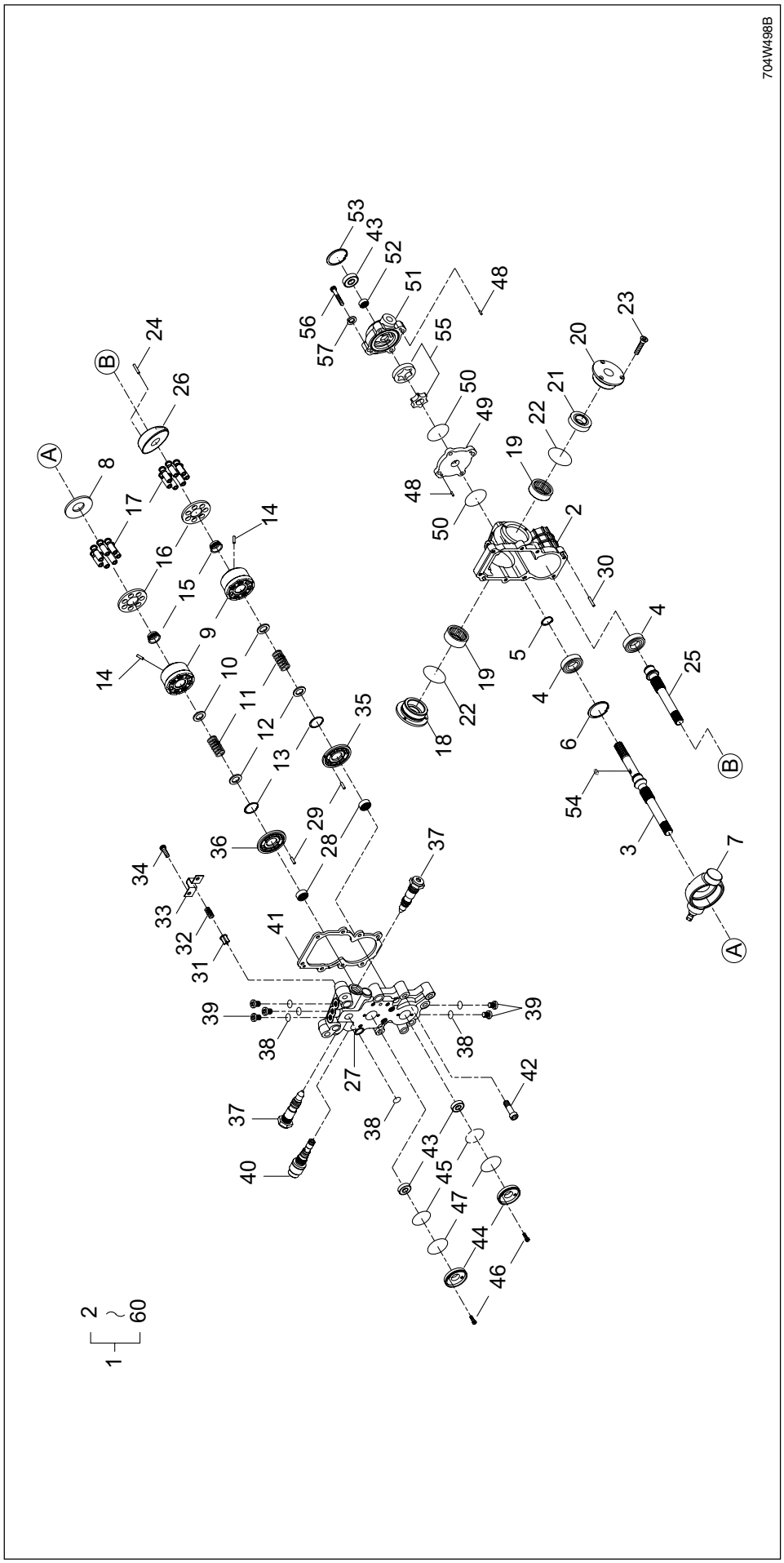

(1) HST Ass'y
(2) Body
(3) Shaft
(4) Ball Bearing
(5) Snap Ring
(6) Snap Ring
(7) Swash Plate
(8) Shoe Plate
(9) Cylinder Block
(10) Spring Seat
(11) Spring
(12) Spring Seat
(13) Snap Ring
(14) Pin
(15) Ball Guide
(16) Set Plate
(17) Piston Ass'y
(18) Cover B
(19) Dx-bearing
(20) Cover A
(21) Oil Seal
(22) O-ring
(23) Screw
(24) Pin
(25) Shaft (Motor)
(26) Swash Plate Ass'y
(27) Front Cover
(28) Needle Bearing
(29) Pin
(30) Pin
(31) Check
(32) Spring
(33) Spring Holder
(34) Wrench Bolt
(35) Valve Plate (Motor)
(36) Valve Plate (P/P)
(37) Neutral Valve Ass'y
(38) O-ring
(39) Plug
(40) Neutral Valve Ass'y
(41) Gasket
(42) Wrench Bolt
(43) Oil Seal
(44) Cover
(45) O-ring
(46) Wrench Bolt
(47) O-ring
(48) Pin
(49) Plate
(50) O-ring
(51) Casing
(52) Needle Bearing
(53) Snap Ring
(54) Key
(55) Gerotor
(56) Wrench Bolt
(57) Spring Washer

4.1.1 DISASSEMBLING

1. Remove the wrench bolts (58) and remove the charge pump (53). Remove items (55, 57, 50) from the charge pump (53).
2. Remove the wrench bolts (49) and remove the front cover (28) and gasket (48).

NOTE:

- *Lift the front cover (28) away from the housing carefully because the valve plates (16, 27) may be stuck to the bottom of the front cover (28). If the valve plates (16, 27) did not come away with the front cover (28) then remove them.*

IMPORTANT

- ***Keep the valve plates (16, 27) separate for correct assembly.***

NOTE:

- *Replace the oil seal and O-ring with new ones when installing.*
- *For assembly, lubricate new O-rings, sealing washers, oil seals and moving parts with clean hydraulic oil.*

3. Remove the cylinder block (12).
4. Hold the swash plate assy (60) by hand and remove it out.
5. Drive the shaft (23) from the assembly and press bearing (4) from the shaft (23).
6. Remove the snap ring (11) from the running swash plate (7) and then disassemble items (8~10).
7. Remove screws (22) (both sides). Using a soft hammer tap the shaft of the swash plate (7) to remove swash cover (17). Remove bearing (18) from the swash cover (17). Tap the other end of the swash plate (7) to drive out swash cover (19). Remove bearing (18) and seal (20). Remove the swash plate (7).
8. Remove the snap ring (6) and key (56) from the shaft (3). Drive the shaft (3) and bearing (4) out of the housing (HST Body) and then drive the bearing (4) from the shaft (3).
9. Clean all parts in a cleaning solvent and dry using compressed air. DO NOT use cloths to dry hydraulic components.

4.1.2 ASSEMBLING

1. Press bearing (4) up to the shoulder of shaft (3) and install snap ring (5) on the shaft (3). Install the shaft (2) in to the housing and install snap ring (6) in to the housing.
2. Install the swash plate (7) into the housing.
3. Using bushing, bearing and seal drive set, install a new oil seal (20) up to the shoulder of the swash cover (19).
4. Install bearing (18) and a new O-ring onto the swash cover (19). Install and tighten screws (22) to a torque of 6.2 ~ 7.6 Nm (0.6 ~ 0.8 kgf-m, 4.6 ~ 5.6 lb-ft).

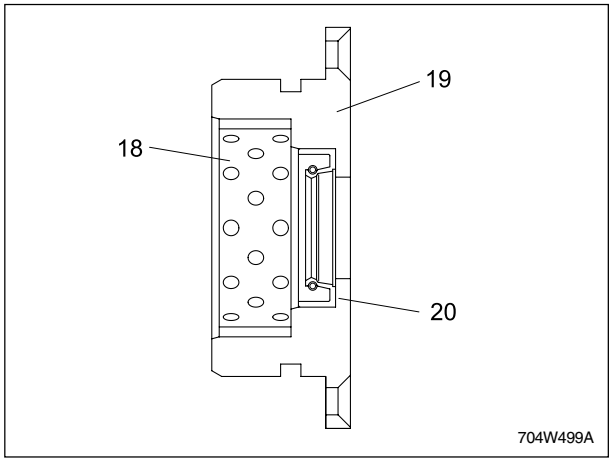

(18) Bearing (19) Swash Cover
(20) Oil Seal

5. Install the shoe plate (8) onto the swash plate (7) as shown.
6. Assemble items (9, 10, 12) and install them onto the swash plate (7), install snap ring (11) in to the swash plate (7).

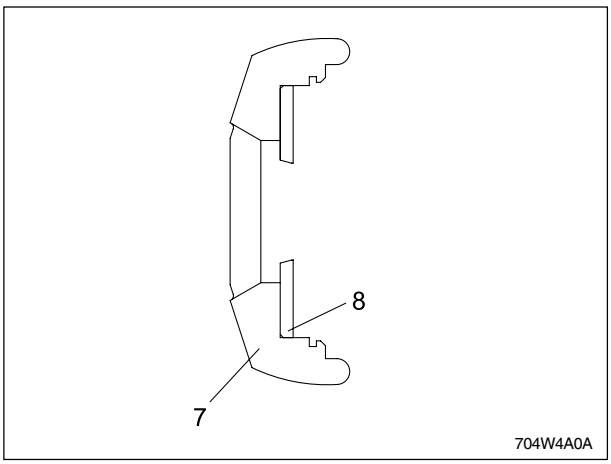

(7) Swash Plate (8) Shoe Plate

7. Press bearing (4) up to the shoulder of the shaft (23).
8. Assemble items (12 ~ 15) together. Install this assembly onto the shaft (3). Install the shaft assembly into the swash plate assembly (60). Be careful while assembling cylinders and pistons.
9. Install the shaft (23) into the body (2). Align the pin in the body (2) with the hole in the swash plate assembly (60). Press the shaft (23) into the body (2).
10. Apply petroleum jelly to the valve plates (27) and install them onto the front cover (28).
11. Install items (28, 48, 49) and tighten (49) to a torque of 44.0 ~ 54.0 Nm (4.5 ~ 5.5 kgf-m, 32.5 ~ 39.8 lb-ft).

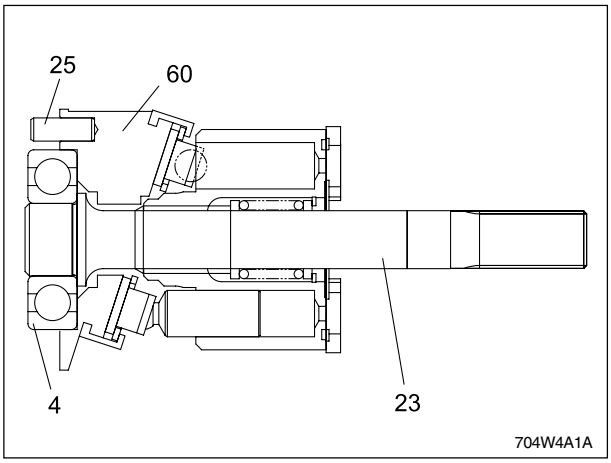

(4) Ball Bearing (24) Swash Plate
(23) Shaft (31) Pin

IMPORTANT

- ***Make sure that the valve plates are installed into the same position as removed during Hydrostatic Transmission Disassembly.***

12. Press a new oil seal (43) into the charge pump casing (53). Install the snap ring (55).
13. Install items (50 and 57) and new O-ring into the charge pump casing (53) and install items (53, 56, 58) onto the housing and tighten the wrench bolts (58) to a torque of 26.5 to 32.4 Nm (2.7 ~ 3.3 kgf-m, 19.5 ~ 23.9 lb-ft).

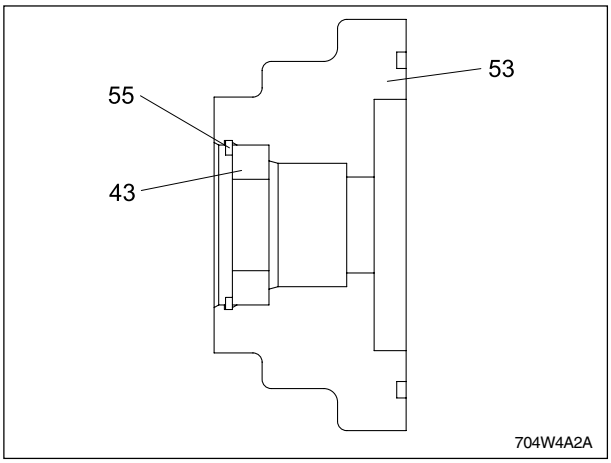

(43) Oil Seal (55) Snap Ring
(53) Charge Pump Casing

4.2 DISASSEMBLING TRANSMISSION FOR HST MODEL (CK25H/27H/30H/35H)

4.2.1 DRAINING THE TRANSMISSION FLUID

CAUTION

To avoid personal injury:

- ***Allow the engine to cool down sufficiently, oil can be hot and can burn.***

1. To drain the used oil, remove the drain plug at the bottom of the transmission case and drain the oil completely into the oil pan.
2. After draining reinstall the drain plug.
3. Fill with the new **DAEDONG** TF65 fluid up to the upper line of the gauge.

   (See “LUBRICANTS” in Maintenance Section)
4. After running the engine for a few minutes, stop it and check the oil level again; add oil to prescribed level.

Oil capacity	CK25H/27H/ 30H/35H	30 ℓ (7.93 U.S.gal.)

IMPORTANT

- ***Do not operate the tractor immediately after changing the transmission fluid.***

  Run the engine at medium speed for a few minutes to prevent damage to the transmission.

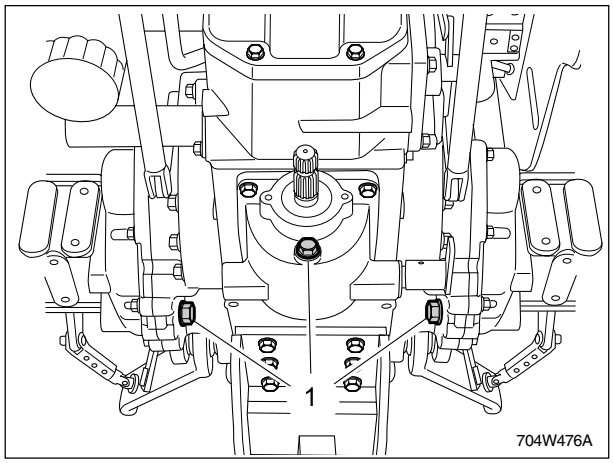

(1) Drain Plugs

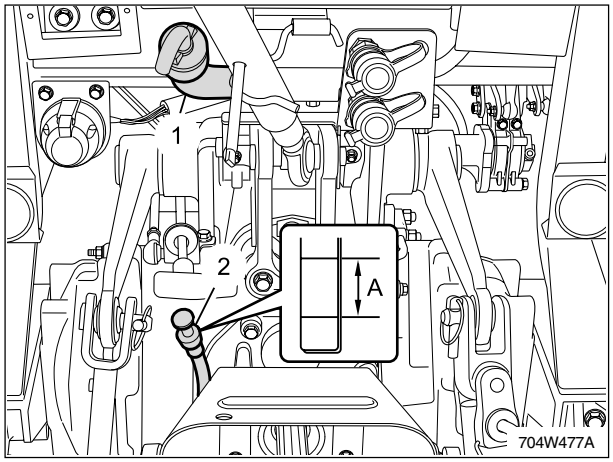

(1) Oil Filling Plug (2) Gauge

(A) Oil Level is Acceptable Within this Range

4.2.2 BONNET

1. Open the bonnet (1) and disconnect the electric connector (2).
2. Remove the air-cylinder (3).
3. Remove the snap-pin, joint-pin and bonnet(1).
4. Remove the side cover (LH/RH) (4).
5. Disconnect the battery terminal (-) (5).

NOTE:

- *When disconnecting the battery cords, disconnect the (-) cord first, when connecting, (+) cord first.*

(For assembly)

After connecting the battery terminal (-), apply a little grease to it.

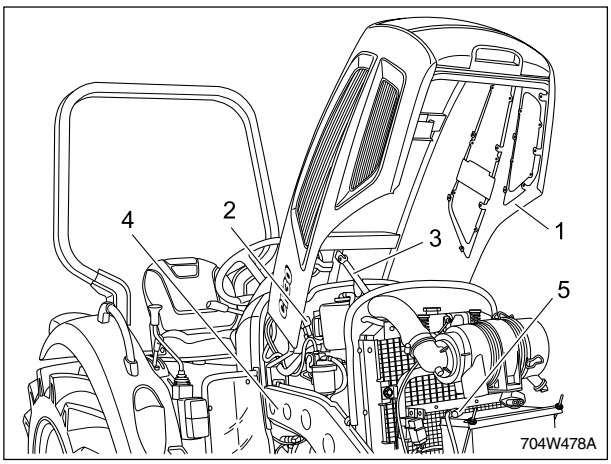

(1) Bonnet
(2) Connector
(3) Air-cylinder
(4) Side Cover
(5) Battery Terminal (-)

4.2.3 HYDRAULIC TUBE AND ELECTRIC WIRING

1. Remove the steering hoses(R, P, T).(2, 3, 4).
2. Remove the accelerator wires (hand, pedal).(5, 6)
3. Disconnect the bonnet wire harness 2 Assy.
4. Remove the rubber tube 1 (7) out of suction tube 3 (8).
5. Remove the hydraulic tube (B1).(9)
6. Remove the cooling tube 3 (HST type)
7. Remove the steering hose (L).(10)
8. Remove the cooling tube 4 (HST type)
9. Disconnect the bonnet wire harness 1 Assy.(11)

(When reassembling)

- A hose classification
  - Steering hose P : A red tag attachment
  - Steering hose R : A white tag attachment
  - Steering hose L : A yellow tag attachment
  - Steering hose T : No tag

Item	Tightening torque
Steering hose P, R, L	29.4 Nm 3.0 kgf-m 21.7 lb-ft
Hose band	9.8 Nm 1.0 kgf-m 7.2 lb-ft

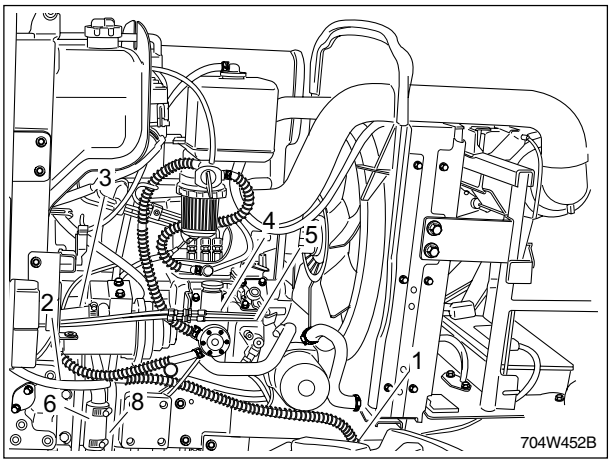

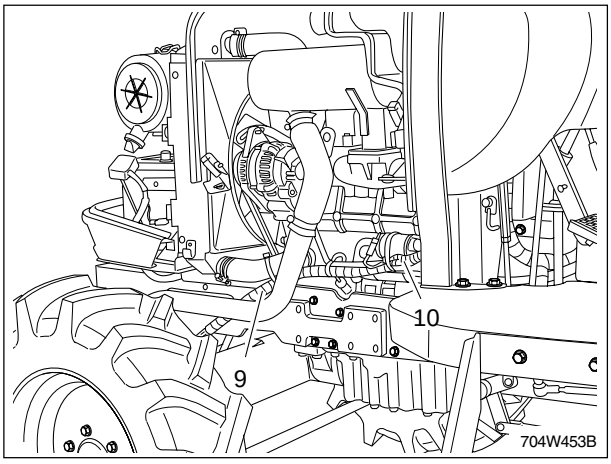

(1) Bonnet Wire Harness 1 Assy
(2) Steering Hose (R)
(3) Steering Hose (P)
(4) Steering Hose (T)
(5) Accelerator Wire (Hand)
(6) Accelerator Wire (Pedal)
(7) Rubber Pipe
(8) Suction Pipe 3
(9) Hydraulic Pipe (B1)
(10) Steering Hose (L)

4.2.4 PROPELLER SHAFT

1. Remove the bolts and slide the propeller shaft cover .
2. Tap out the spring pin (8), and then slide the coupling (2) to the rear.
3. Romove the propeller shaft and cover.

(When reassembling)

- Apply grease to the splines of the propeller shaft.

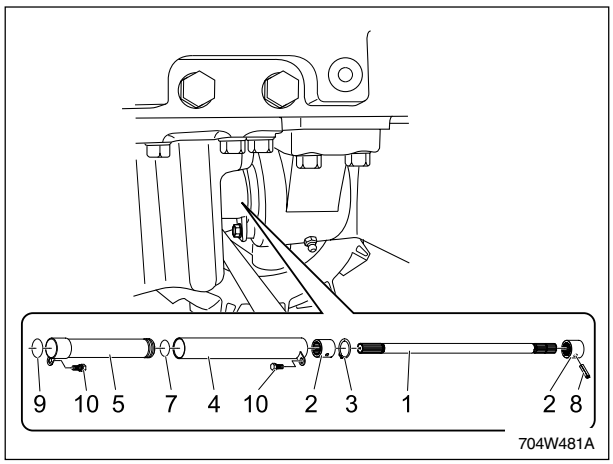

(1) Propeller Shaft
(2) Coupling
(3) Cir-Clip
(4) Propeller Shaft Cover 1
(5) Propeller Shaft Cover 2
(6) O-ring
(7) O-ring
(8) Spring Pin
(9) O-ring
(10) Bolt

4.2.5 SEPARATING ENGINE & CLUTCH HOUSING

1. Place the jacket to the bottom of the clutch housing and engine.
2. Remove the mounting bolts for the fuel tank support.
3. Separate engine and clutch housing.

(When reassembling)

- Apply grease to the spline of main shaft.
- Apply liquid gasket (Three Bond 1,211 or equivalent) to the joint face of the flywheel housing and clutch housing.

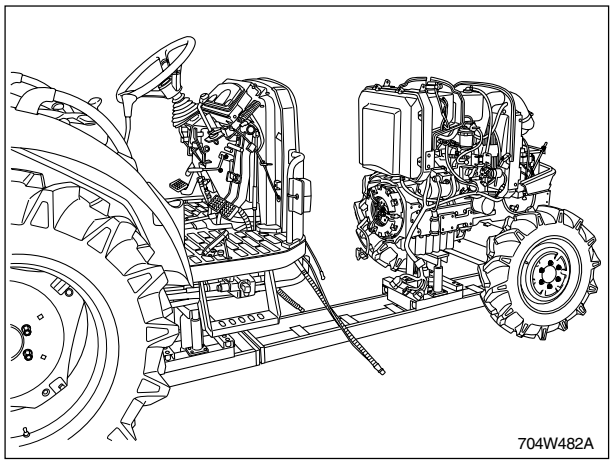

Item	Tightening torque
Bolts, nuts	48.1 ~ 55.9 Nm 4.9 ~ 5.7 kgf-m 1.004 ~ 1.167 lb-ft
Stud bolts	24.5 ~ 31.4 Nm 2.5 ~ 3.2 kgf-m 0.512 ~ 0.655 lb-ft

4.2.6 STEP MAT, SPLASHBOARD

1. Remove the rivets and the splashboard covers (LH, RH)
2. Remove the step mat.
3. Remove the bolts and the plates. (LH/RH).
4. Disconnect the wire connect or for front combination lamp.

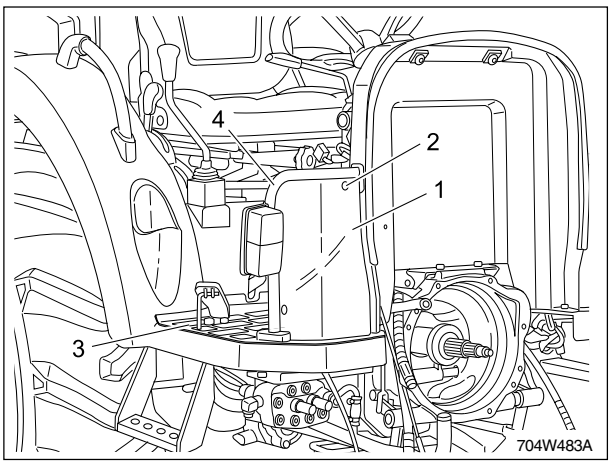

(1) Splash Board Cover (3) Step Mat
(2) Rivet (4) Plate

4.2.7 FRAME ASSY

1. Remove the instrument cover(lower) and remove the mounting bolts.
2. Remove the bolts and disconnect the wiring connectors for hazard, headlight, and key switch with instrument cover(upper).
3. Remove the bolts and shuttle supports.
4. Tap out the universal joint pin and remove the shuttle shaft 2.
5. Disconnect the shuttle joint rod assy.
6. Disconnect the clutch rod and brake rods (LH, RH).
7. Disconnect the wiring harness connectors for bonnet (1, 2), panel, and fender.
8. Remove the mounting bolts for the step.
9. Raise the frame assy. With nylon rope and remove the mounting bolts in the clutch housing.
10. Remove the frame assy. By pulling it slowly.

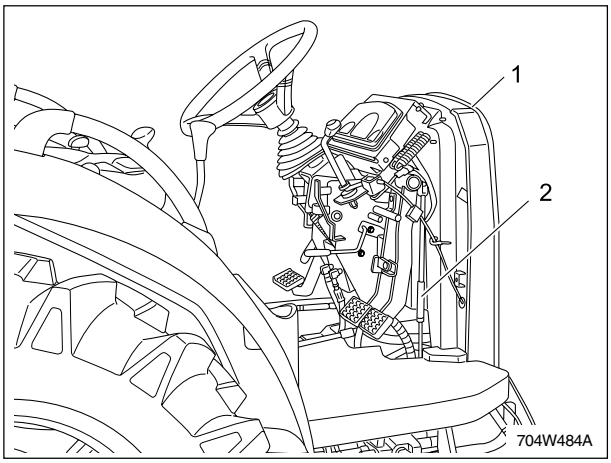

(1) Frame
(2) Brake Rod

4.2.8 ROPS

1. Remove the the lock pin, linch pin and the rops from rops support.
2. Remove the bolts and the rops supports (LH, RH).

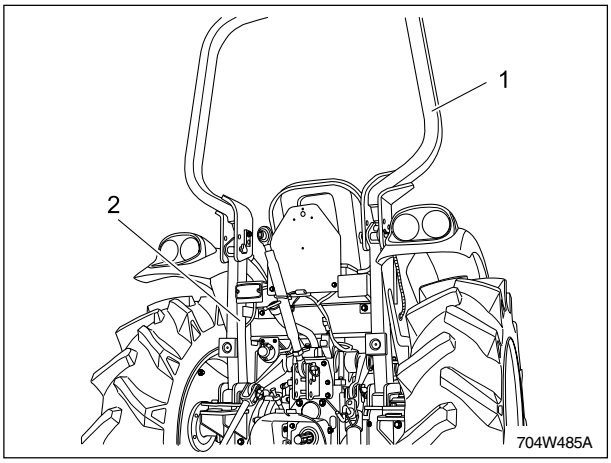

(1) Rops (2) Rops Support

4.2.9 SEAT, LEVERS

1. Raise the frame assy. With nylon rope and remove the mounting bolts for the seat floor.
2. Remove the seat assembly.
3. Remove the grips of PTO lever, and Hi-Lo shift lever.
4. Remove the bolts and lever guide (LH, RH) and others.
5. Remove the bolt, lever bracket and the lever guide plates.
6. Disconnect the position lever, draft lever, and external hydraulic valve levers.

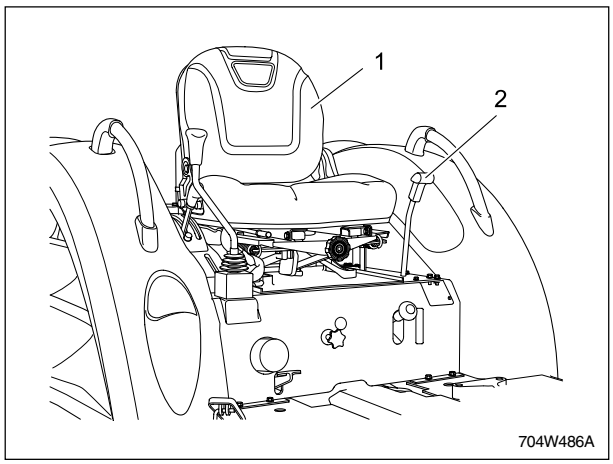

(1) Seat (2) Hi-Lo Shift Lever

4.2.10 FENDER

1. Disconnect the brake lamp wire connector and then remove it from the fender.
2. Disconnect the wiring connectors for the work lamp, and the back lamp.
3. Raise the frame assy. With nylon rope and remove the mounting bolts in the seat flooer and front cover.
4. Remove the fender.

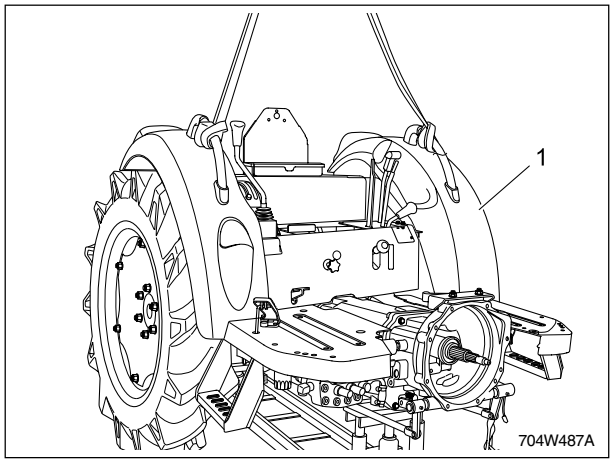

(1) Fender

4.2.11 FRONT COVER, STEP

1. Remove the pin and then remove the main shift lever.
2. Remove the grip of front wheel drive lever.
3. Disconnect the grip and the hydraulic control rod.
4. Disconnect the differential lock pedal rod.
5. Remove the joystick lever and the front cover mounting bolts.
6. Remove the front cover and step mounting bolts.
7. Remove the step (LH, RH) and support bracket mounting bolts.

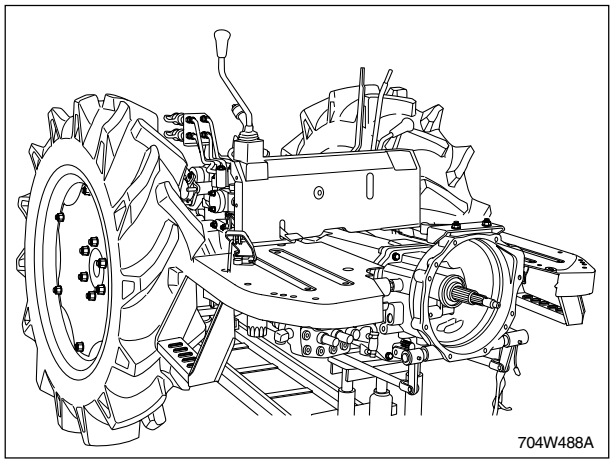

4.2.12 JOYSTICK VALVE, ETC

1. Remove the mounting bolts, joystick valve and control valve at the valve support.
2. Remove the valve support.
3. Disconnect the brake rods (LH, RH)
4. Remove the fender wiring harness.
5. Disconnect the speed set rod 2 from connecting lever. (HST type)

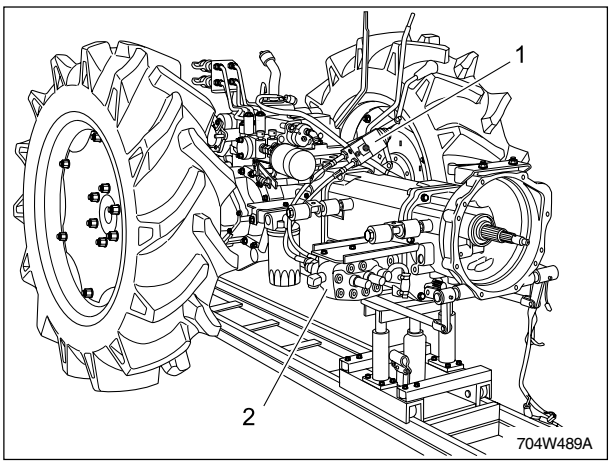

(1) Joystick Valve (2) Control Valve

4.2.13 HST DAMPER ASSEMBLY

1. Remove the split pin (1), cir-clip (2), plain washer (3), damper cylinder (4), spacer (5)(6), damper (7), spacer (11), split pin (8), plain washer (9) and connector plate (12).

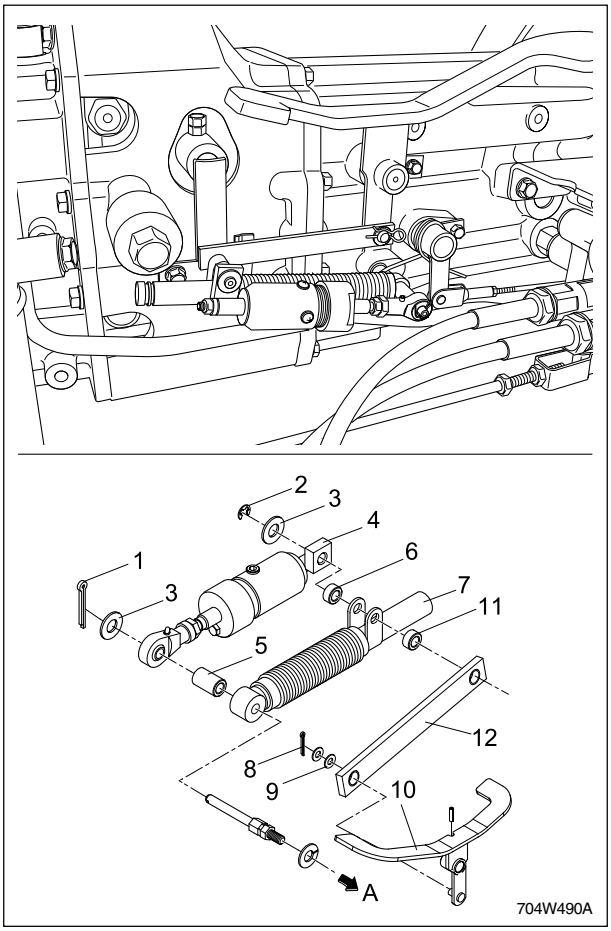

(1) Split Pin
(2) Cir-Clip
(3) Plain Washer
(4) Damper Cylinder
(5) Spacer
(6) Spacer
(7) Damper
(8) Split Pin
(9) Plain Washer
(10) HST Pedal
(11) Spacer
(12) Connector Plate

4.2.14 DISASSEMBLING THE CLUTCH HOUSING AND MIDDLE CASE

1. Place the disassembling stand under the HST case.
2. Hoist the clutch housing by the nylon lift strap.
3. Remove the bolts and nuts.

(When reassembling)

- Apply liquid gasket (three bond 1,206D or equivalent) to sealing the surfaces of clutch housing and case. Thoroughly clean the housings before application.

Item	Tightening torque
Clutch housing and middle case mounting screws	77.5 ~ 90.2 Nm 7.9 ~ 9.2 kgf-m 57.1 ~ 66.5 lb-ft
Clutch housing and middle case mounting nuts	102.9 ~ 117.6 Nm 10.5 ~ 12.0 kgf-m 76.9 ~ 86.8 lb-ft
Clutch housing and middle case mounting stud bolts	39.2 ~ 49.0 Nm 4.0 ~ 5.0 kgf-m 28.9 ~ 36.2 lb-ft

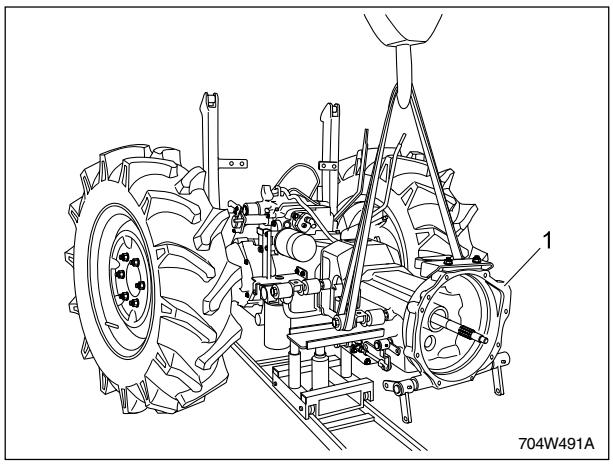

(1) Clutch Housing

4.2.15 DISASSEMBLING THE HST ASSEMBLY

1. Remove the bolt and joint (2).
2. Remove the bolts and HST case (1).
3. Remove the joint bolts (5, 9), HST return tube (6, 7, 8), disconnect the HST assembly (3) form the middle case (4).
4. Remove the bolts (1) and nuts (2).
5. Tap out the HST assembly (3).

Item	Tightening torque
Joint bolt	44.1 Nm 4.5 kgf-m 32.5 lb-ft

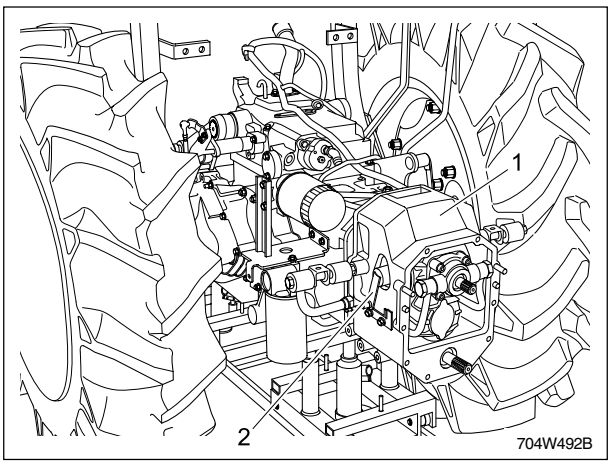

(1) HST Case (2) Joint

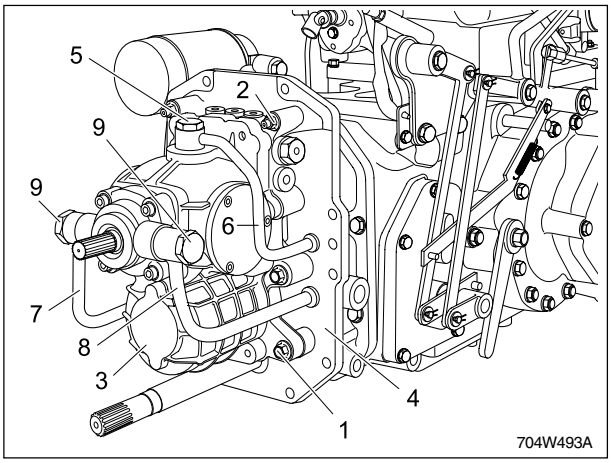

(1) Bolt
(2) Nut
(3) HST Assembly
(4) Middle Case
(5) Joint Bolt
(6) HST Return Tube 1
(7) HST Return Tube 2
(8) HST Return Tube 3
(9) Joint Bolt

4.2.16 DISASSEMBLING MIDDLE CASE FROM T/M CASE(CK25H/27H/30H/35H)

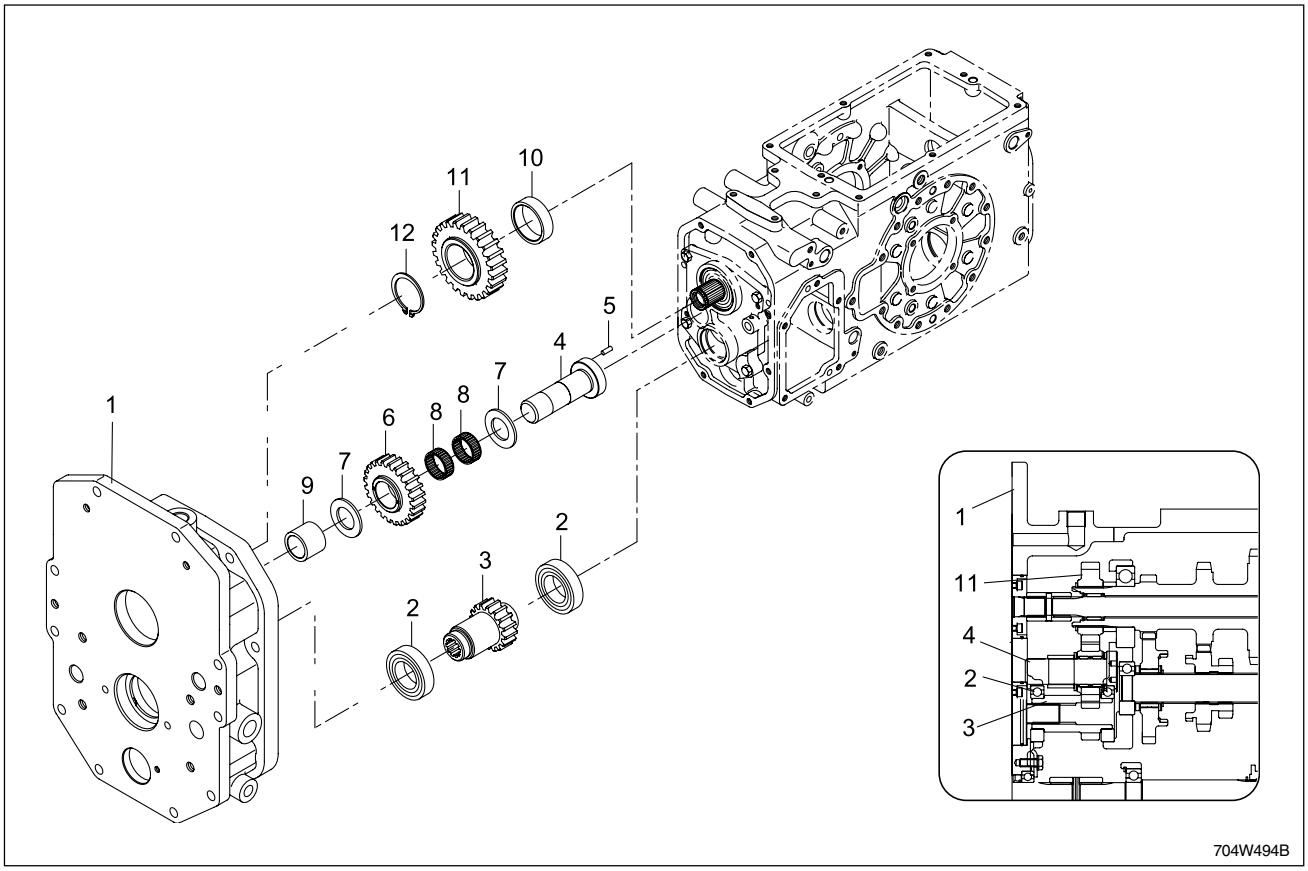

(1) Middle Case
(2) Ball Bearing
(3) 15 Gear
(4) HST Counter Shaft
(5) Straight Pin
(6) 22 Gear
(7) Thrust Collar
(8) Needle Bearing
(9) Collar
(10) Collar
(11) 27 Gear
(12) Snap Ring

1. Remove the remaining cooling pipes. Remove the middle case (1).
2. Disassemble the parts (2~12) of HST output shaft as a group. Then remove the case from the transmission case.

Item	Tightening torque
Bolt, nut	48.1 ~ 55.9 Nm 4.9 ~ 5.7 kgf-m 1.004 ~ 1.167 lb-ft

(When reassembling)
Apply liquid gasket(three bond 1206D or equivalent) to joint face of the middle case and transmission case.

4.2.17 DISASSEMBLING RANGE SHIFT SHAFT GROUP

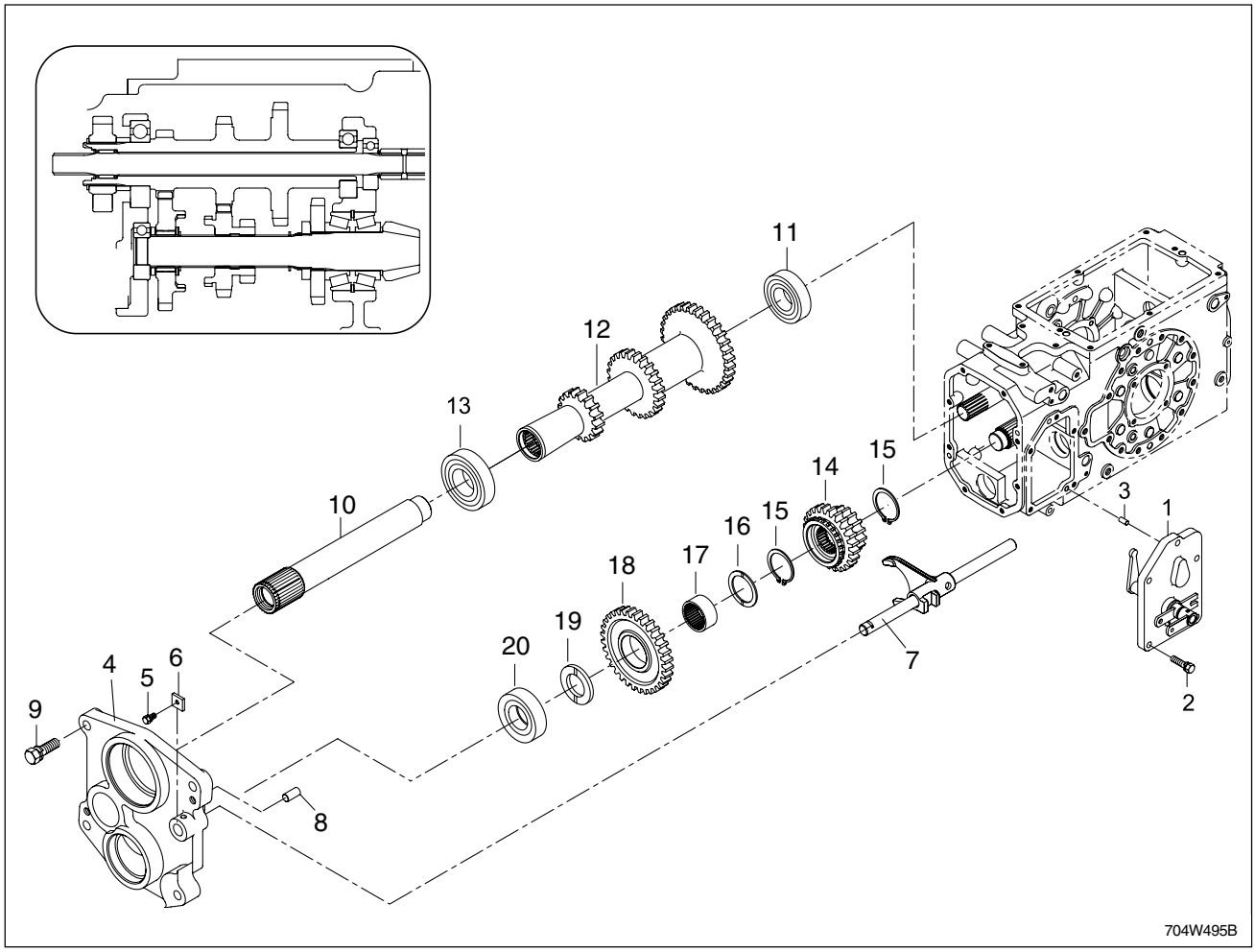

(1) Range Shift Cover	(6) Stopper	(11) Ball Bearing	(16) Thrust Collar
(2) Bolt	(7) Range Shift Rod	(12) 19-27-36 Gear	(17) 34 Gear
(3) Straight Pin	(8) Straight Pin	(13) Ball Bearing	(18) Inner Ring
(4) Bearing Cover	(9) Bolt	(14) 26-17 Gear	(19) Thrust Collar
(5) Bolt	(10) Range Shift Shaft	(15) Snap Ring	(20) Ball Bearing

1. Remove the range shifter lever. Then remove the snap ring, spring pins, and range shifter connecting plate.
2. Tap out the spring pin from the shuttle lever 1 and remove the shuttle lever.
3. Remove the stopper and transmission case mounting bolts.
4. Remove the middle case and transmission case mounting bolts and nuts.

(When reassembling)

- Apply liquid gasket(three bond 1206D or equivalent) to the sealing surfaces of the middle case and the transmission case.

4.2.18 DISASSEMBLING SPIRAL BEVEL PINION

1. Remove the locking tab from 30 nut(1) to loosen the nut.
2. Remove the 30 gear(2)
3. Take out the spiral bevel pinion shaft assembly(6) from the rear.
4. Remove the outer bearing and the snap ring.

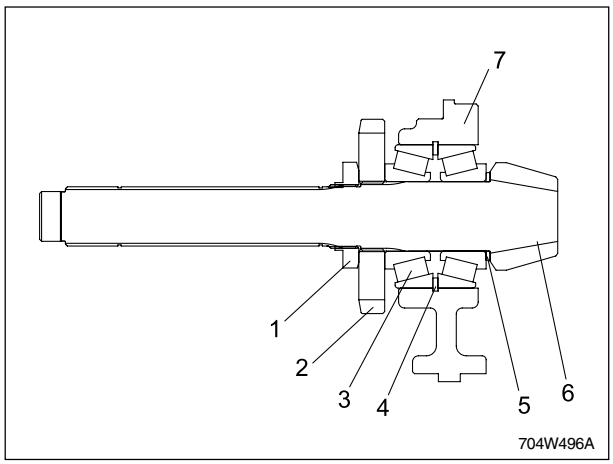

(1) 30 Nut
(2) 30 Gear
(3) Taper Roller Bearing
(4) Snap Ring
(5) Shim
(6) Spiral Bevel Pinion
(7) Transmission Case

4.2.19 REAR PTO (SEE PAGE 4-41)

4.2.20 MID PTO (SEE PAGE 4-42)

4.2.21 SEPARATION OF DIFFERENTIAL GEAR ASSEMBLY (SEE PAGE 4-45)

4.2.22 DISASSEMBLY OF DIFFERENTIAL GEAR (SEE PAGE 4-46)

4.2.23 ASSEMBLING AND ADJUSTMENT THE HST PEDAL DAMPER ASSEMBLY

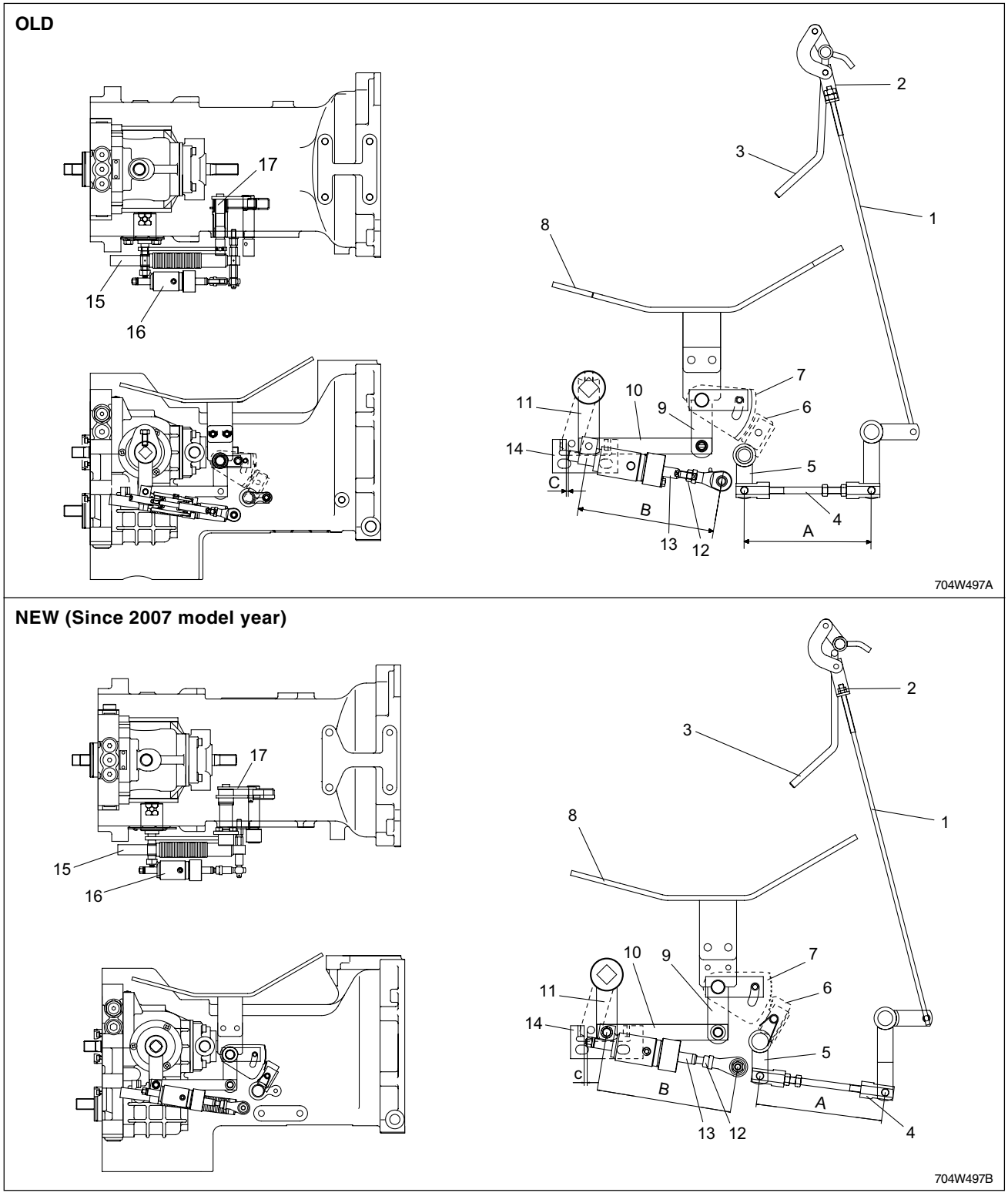

(1) Rod
(2) Nut
(3) Holding Lever
(4) Connecting Rod
(5) Connecting Lever
(6) Lock Lachat (Old: Drum)
(7) Sector Lachat (Old: Rubber Shoe)
(8) Hst Pedal
(9) Pedal Holder
(10) Connecting Plate
(11) Joint
(12) Nut
(13) Adjusting Rod
(14) Adjusting Plate
(15) Damper Assembly
(16) Damper Cylinder Assembly
(17) Lock Shaft

1. Lift rod (4) to take up the free play adjust nuts until distance (A) is 152 mm (5.984 in.).

   Tighten the nuts.

2. Loosen nut (12) and adjust rod (13) until distance (B) is 163.5 mm (6.437 in.).

   Tighten the nut (12).

3. Start the tractor, engage the clutch and put the range lever in the low or high position and the hydrostatic lever in the neutral position. Disengage the clutch.

   If the tractor moves, stop the tractor and adjust distance (B) again.

4. Put the joint (11) in the maximum forward travel position and then return the lever by 0.5 ~ 1.0 mm (0.0196 ~ 0.0393 in.) distance (C).

   Adjust the plate (14) until there no clearance between the pin on joint (11) and plate (14).

Item	Factory Spec.
Distance (A)	152 mm 5.984 in.
Distance (B)	164 mm 6.457 in.
Distance (C)	0.5 ~ 1.0 mm 0.020 ~ 0.039 in.

MEMO

CK25/27/30/35

REAR AXLE

TABLE OF CONTENTS

1. SPECIFICATIONS 6-3

2. OPERATING PRINCIPLE 6-4

2.1 Power train 6-4

2.2 Principle of differential system 6-5

2.3 Differential lock system 6-7

3. TROUBLESHOOTING 6-8

4. SERVICING 6-9

4.1 Draining the transmission fluid 6-9

4.2 Rops / rear axle 6-10

4.3 Disassembling the rear axle case 6-11

1. SPECIFICATIONS

Application	Specified	Limit
Differential pinion shaft to differential pinion clearance	0.060 ~ 0.102 mm 0.0023 ~ 0.0040 in.	-
Differential pinion to differential side gear backlash	0.15 ~ 0.20 mm 0.0059 ~ 0.0079 in.	-
Differential side gear washer 1 thickness	1.5mm 0.059 in.	1.46 ~ 1.54 mm 0.058 ~ 0.060 in.
Differential side gear washer 2 thickness	1.6 mm 0.063 in.	1.56 ~ 1.64 mm 0.061 ~ 0.064 in.
Differential side gear washer 3 thickness	1.7 mm 0.067 in.	1.66 ~ 1.74 mm 0.065 ~ 0.068 in.

2. OPERATING PRINCIPLE

2.1 POWER TRAIN

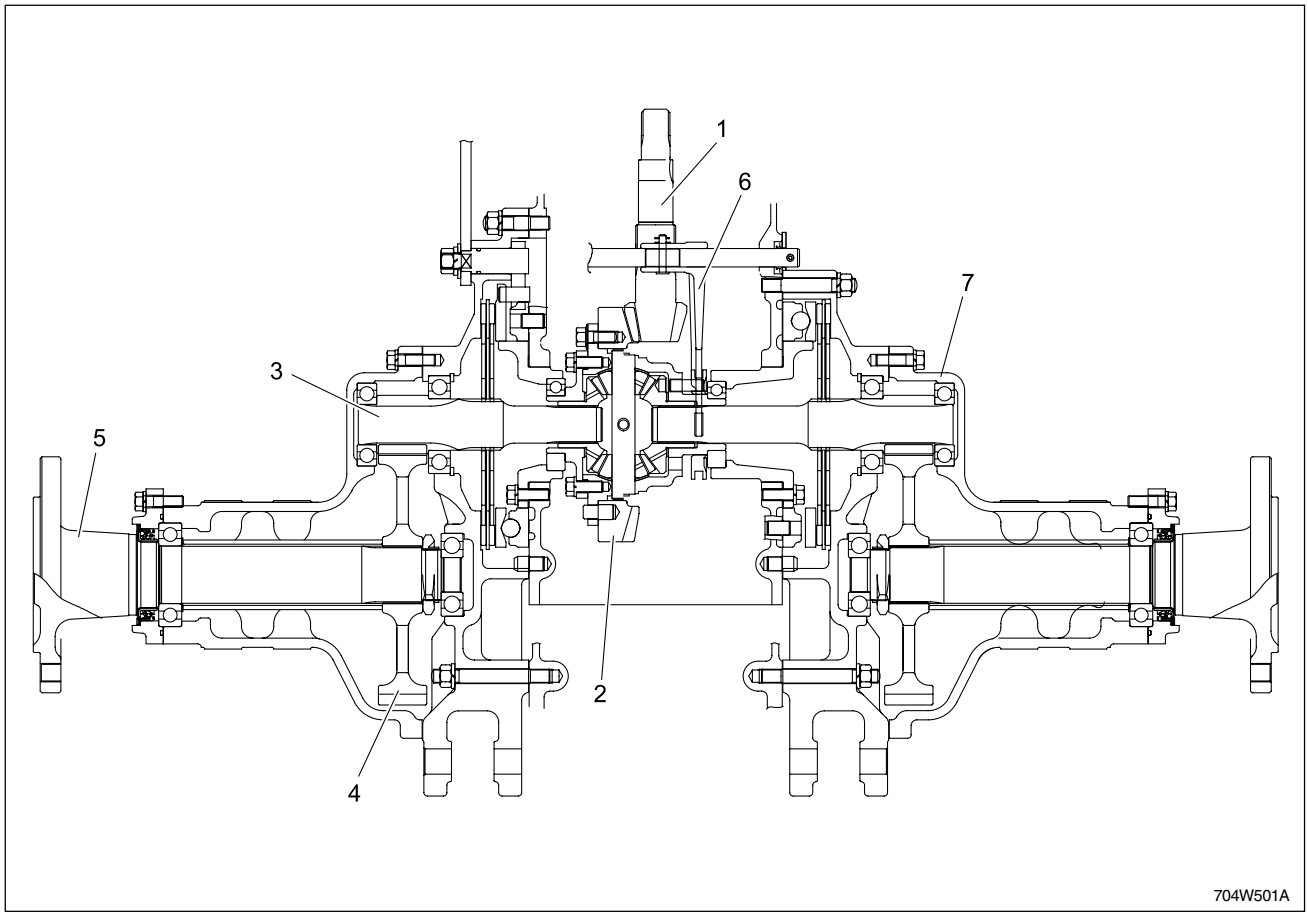

(1) Spiral Bevel Pinion
(2) Spiral Bevel Gear
(3) 10 Gear Shaft
(4) 55 Gear
(5) Rear Axle
(6) Differential Lock Fork
(7) Rear Axle Case

The rear axle is the final mechanism that transmits power from the transmission to the rear wheels. The shaft speed, controlled by the transmission, is further reduced to approx. 1/5 (7T/35T) by the spiral bevel pinion (1) and spiral bevel gear (2), and then reduced to 1/5.5 (10T/55T) by the 10 gear shaft (3) and 55T spur gear (4). As a result, its speed is reduced to approx. 1/27.5 before being transmitted to the rear wheels.

The rear axle is a semi-floating type will ball bearings between the rear axle (5) and rear axle case (7). The case supports the rear wheel load as it transmits power to the rear wheels.

The differential automatically controls the revolution of the right and left wheels when the rear wheels encounter unequal road resistance during turning.

2.2 PRINCIPLE OF DIFFERENTIAL SYSTEM

If two racks with same weight are set between the pinion as shown in the figure (A) and the pinion is lifted by pulling up the string attached to it as shown in the figure (B), the pinion does not rotate and the pinion and both racks are lifted in the same height (H).

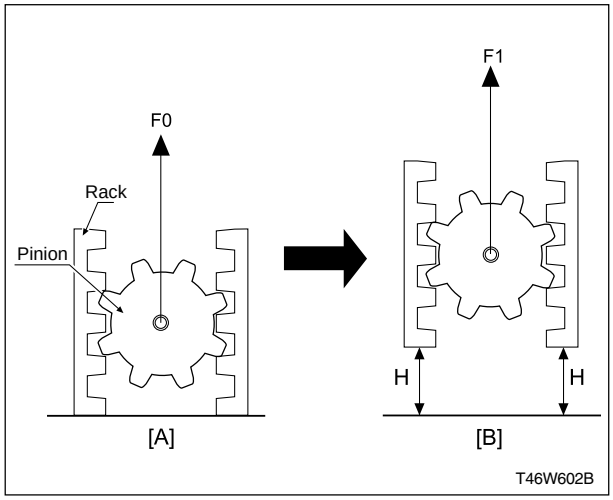

However, if putting a weight only on one rack and lifting the pinion, the pinion rises as it rotates as shown in the figure (C). The rack with a weight keeps its position and the other rack without a weight rises in the amount of the height that the pinion moves and the pinion pushes up the rack. Therefore, this rack rises in double amount of the height that the pinion moves (2H).

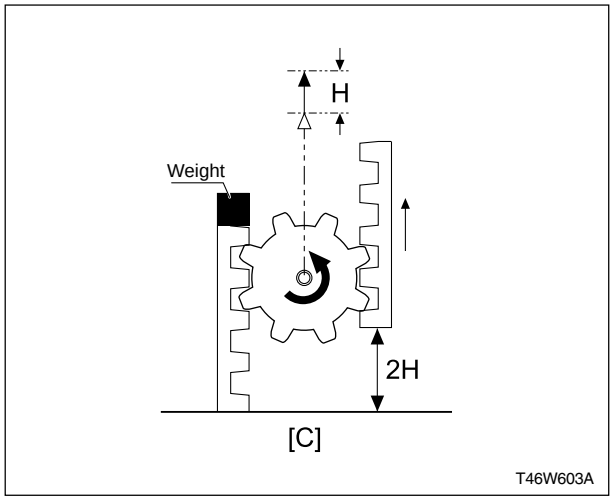

In this case, both racks refer to the differential side gears and the pinion refers to the differential pinion. Also, the force that pulls up the pinion is the rotating force of the ring gear.

If the tractor moves forward and the loads on the both wheels are same, the differential pinion (3) idles with the differential case (4) to run the differential side gear (5). In this case, the rotating speed of the ring gear (1), differential case (4) and the both side gears (5) is same.

When cornering, the load applied to the both differential side gears are different since the outer wheels should rotate faster than the inner wheels. Therefore, the differential pinion rotates and idles simultaneously to operate the side gear with low load faster and the side gear with high load slower for comfort cornering.

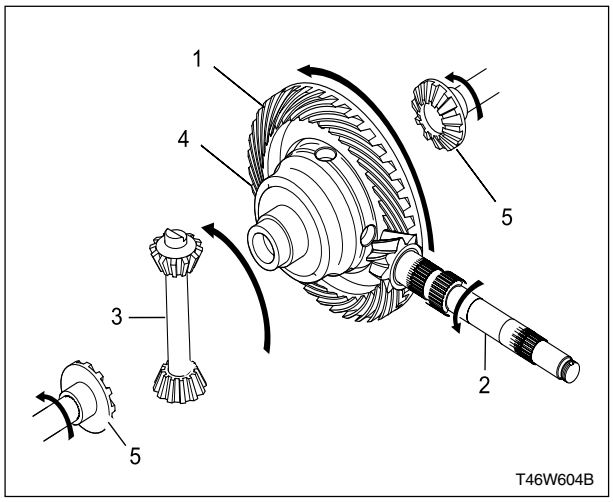

However, if the wheels on one side are on the slippery road, the load difference between both differential side gears remarkably increases and the self-rotating speed of differential pinion (3) considerably increases too. Therefore, the side gear (5) with very low load rotates at twice the speed and the side gear (6) with comparatively high load does not rotate at all. In other words, it is not possible to escape the pit since the wheel on ice with no friction rotates at twice the speed and the wheel on road with friction does not rotate.

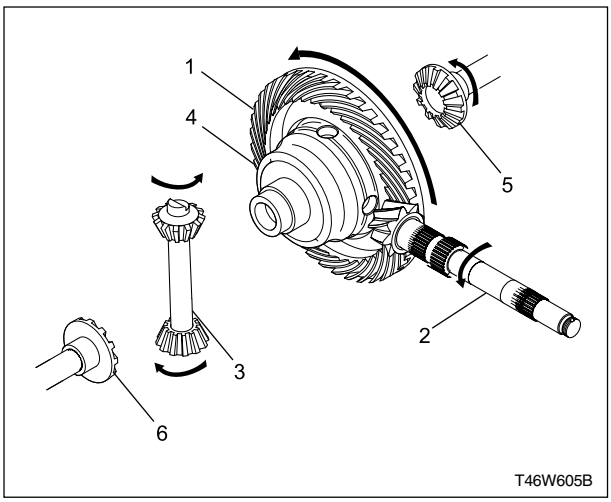

2.3 DIFFERENTIAL LOCK SYSTEM

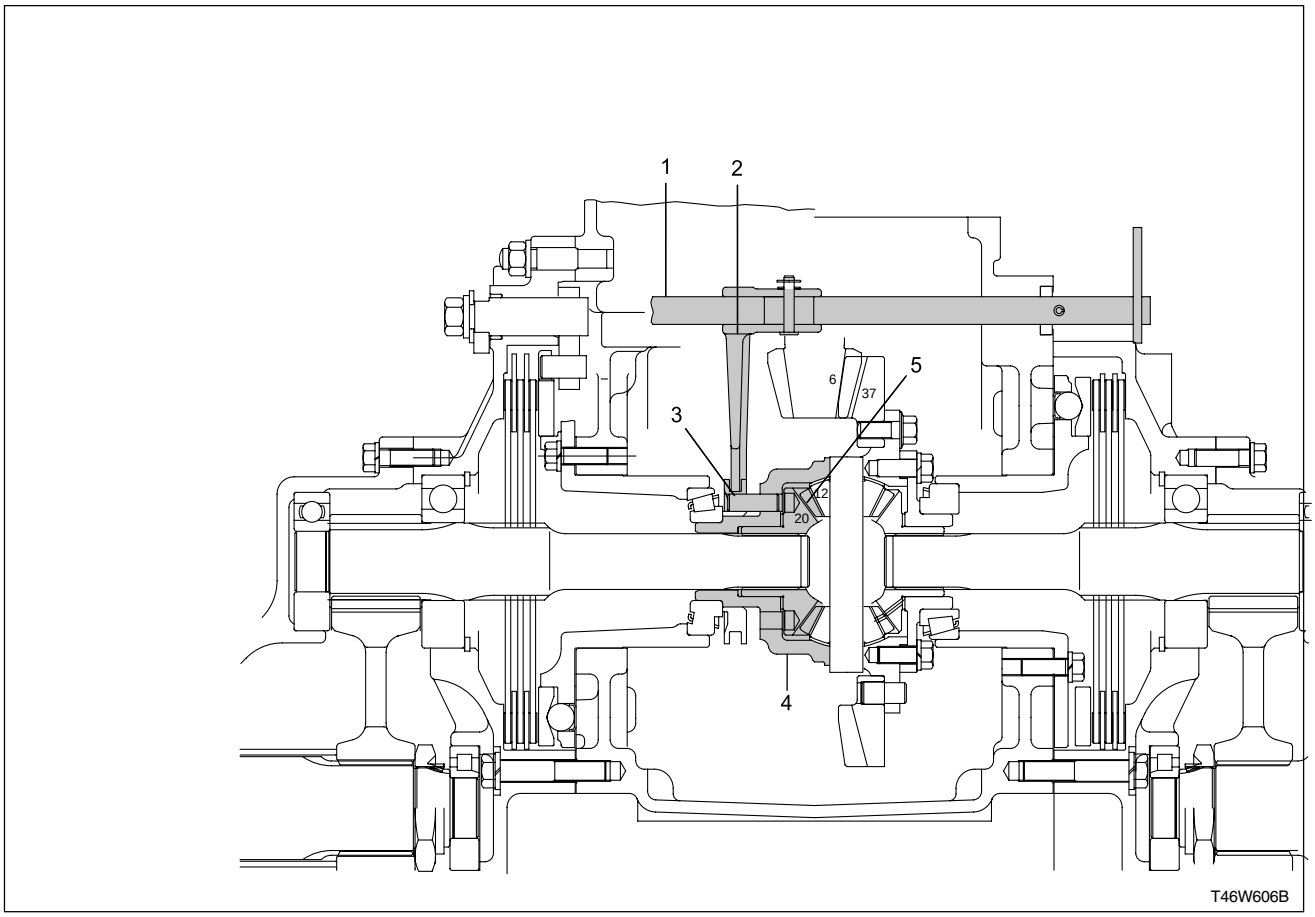

The differential lock system is to solve such problems as described on the previous page. When the differential lock lever is depressed, the differential fork shaft (1) rotates and the differential fork (2) moves to lock the differential system.

The differential lock is designed to operate the differential lock shift pin (3) to lock the differential case (4) and one differential side gear (5).

As the differential case (4) and one differential side gear (5) rotate at the same speed, the other differential side gear rotates at the same speed.

When one rack is fixed to the pinion and the pinion is lifted, the other rack is lifted in the same height (L) as shown in the figure on the left.

If the differential lock system is unnecessarily used on the road with sufficient friction, excessive load is applied to the differential side gears or the differential pinion and the internal gears or the components of the differential lock system can be damaged unless the tractor is moving straight forward.

Therefore, the steering wheel should be set to the middle position when using the differential lock system.

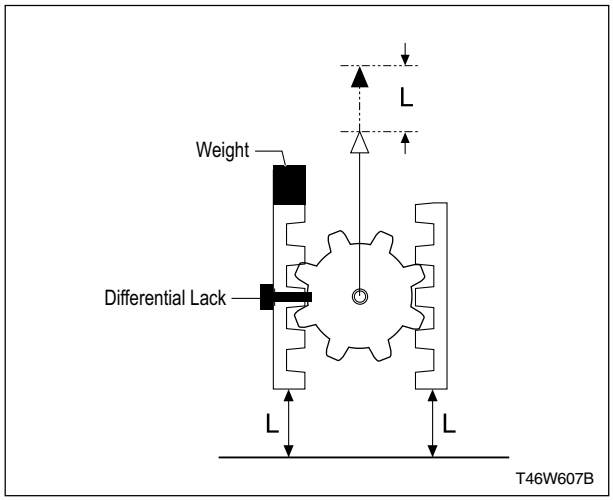

3. TROUBLESHOOTING

Symptom	Items	Solution
Excessive or unusual noise at all times	• Improper backlash between 7T spiral bevel pinion and 35T bevel gear.	Adjust
	• Improper backlash between differential pinion and differential side gear.	Adjust
	• Bearings worn.	Replace
	• Insufficient or improper type or transmission fluid used.	Replenish or replace
Noise while turning	• Differential pinions or differential side gears worn or damaged.	Replace
	• Differential lock binding (does not disengage)	Replace
	• Bearings worn.	Replace
Differential lock can not be set	• Differential lock shift fork changed.	Replace
	• Differential lock arm damaged.	Replace
Differential lock pedal does not return	• Differential lock pedal return spring weaken or damaged.	Replace

4. SERVICING

4.1 DRAINING THE TRANSMISSION FLUID

CAUTION

To avoid personal injury:

- ***Allow the engine to cool down sufficiently, oil can be hot and can burn.***

1. To drain the used oil, remove the drain plug at the bottom of the transmission case and drain the oil completely into the oil pan.
2. After draining reinstall the drain plug.
3. Fill with the new **DAEDONG** TF65 fluid up to the upper line of the gauge.

   (See “LUBRICANTS” in Maintenance Section)
4. After running the engine for a few minutes, stop it and check the oil level again; add oil to prescribed level.

Oil capacity	CK25/27/ 30/35	30 ℓ (7.13 U.S.gal.)
	CK25H/27H/ 30H/35H	27 ℓ (7.93 U.S.gal.)

IMPORTANT

- ***Do not operate the tractor immediately after changing the transmission fluid.***

  Run the engine at medium speed for a few minutes to prevent damage to the transmission.

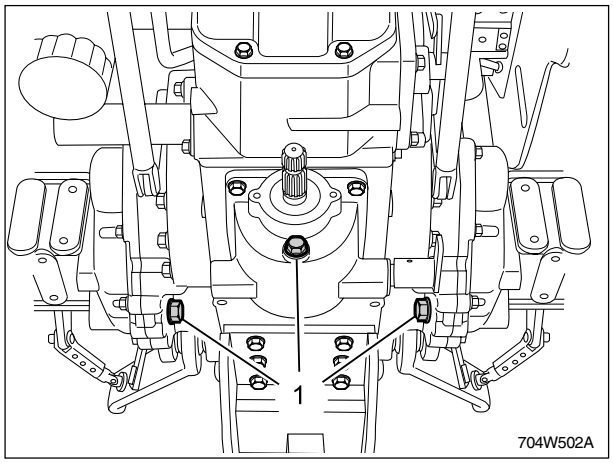

(1) Drain Plugs

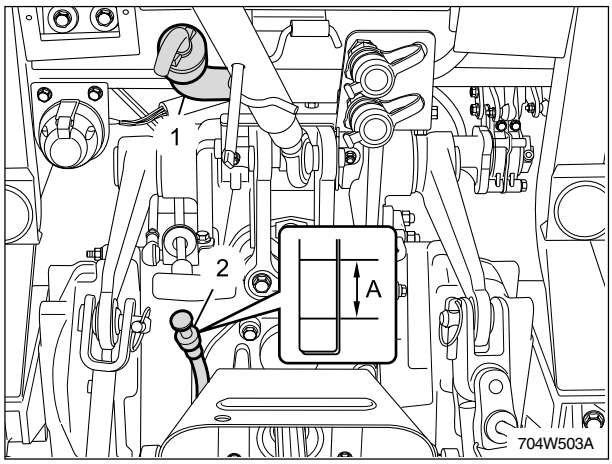

(1) Oil Filling Plug (2) Gauge

(A) Oil Level is Acceptable Within this Range

4.2 ROPS / REAR AXLE

1. Place the dissembling stand under the transmission case.
2. Remove the rear wheel mounting bolts, nuts and rear wheel.
3. Remove the lock pin, linch pin and rops from the rops support.
4. Remove the lower link, lift rod, stabilizer.
5. Remove the bolts and rops supports.

Item	Tightening torque
Rear wheel mounting nuts	255 ~ 304 Nm 26 ~ 31 kgf-m 5.3 ~ 6.3 lb-ft
Rear wheel mounting stud bolt	29.4 Nm 3 kgf-m 0.6 lb-ft
Rops support mounting bolts	137.3 Nm 14 kgf-m 2.9 lb-ft

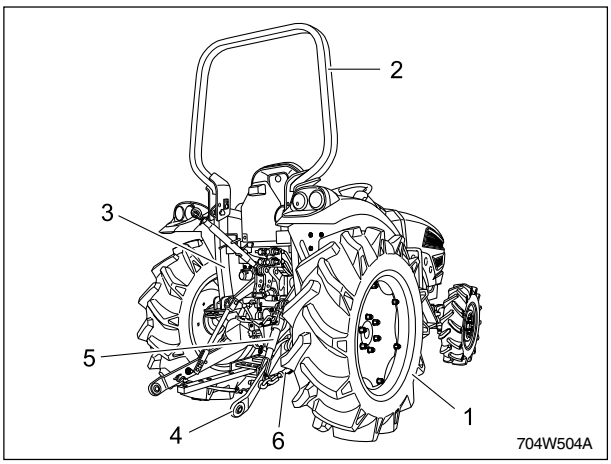

(1) Rear Wheel
(2) Rops
(3) Rops Support
(4) Lower Link
(5) Lift Rod
(6) Stabilizer

6. Place the dissembling stand under the rear axle case.
7. Remove the bolts and nuts.
8. Separate the rar axle case from brake case.

Item	Tightening torque
Rear axle case mounting bolts and nuts	49.0 Nm 5 kgf-m 1.0 lb-ft

(When reassembling)

Check if gasket is damaged. Replace with new as needed.

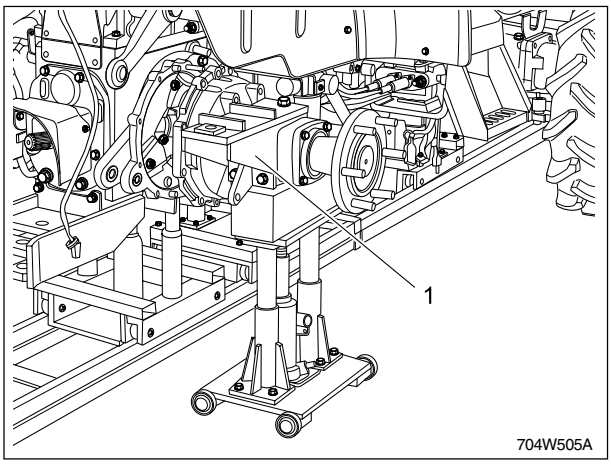

(1) Rear Axle Case

4.3 DISASSEMBLING THE REAR AXLE CASE

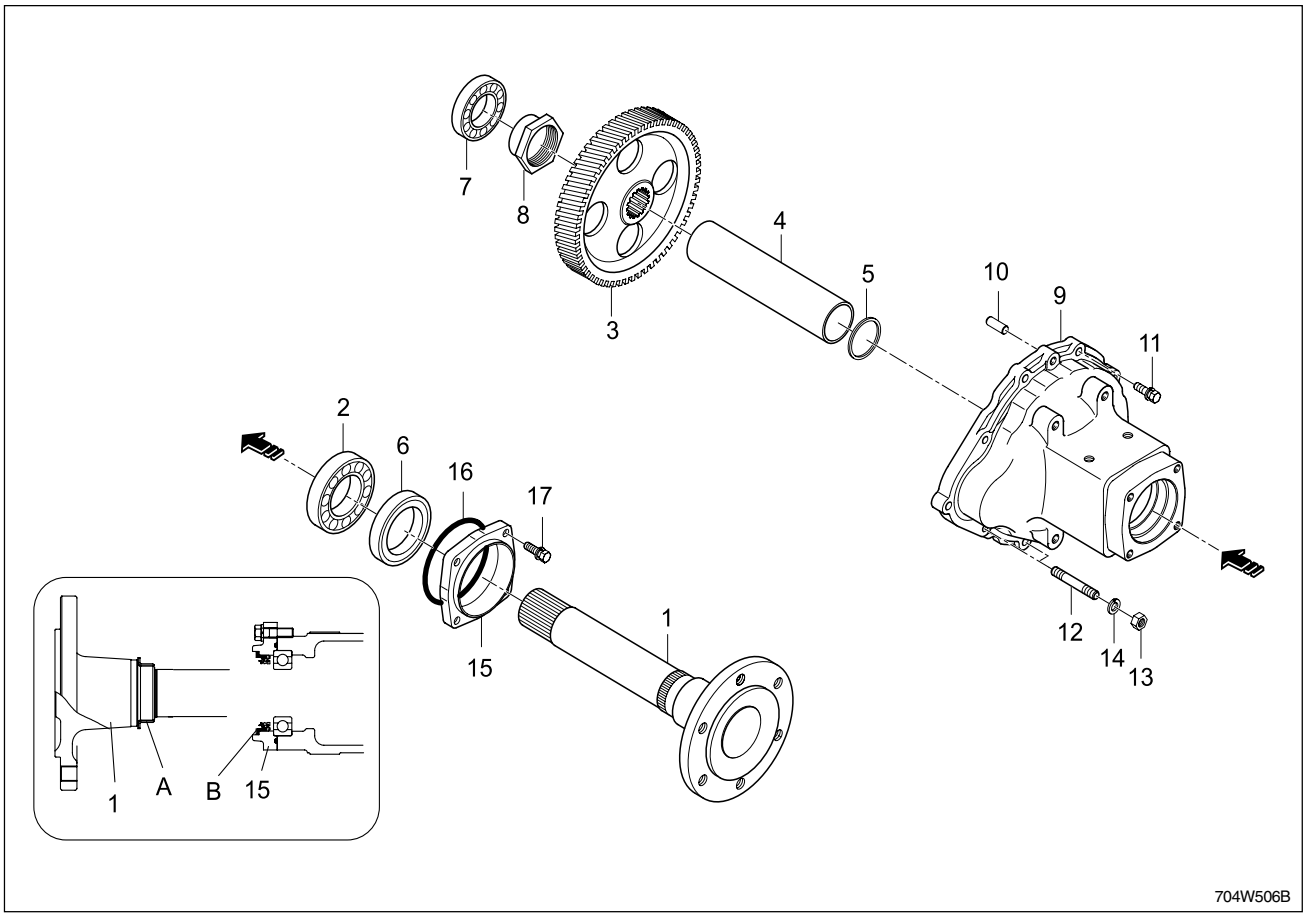

(1) Rear axle
(2) Ball Bearing
(3) 55 Gear
(4) Collar
(5) Spacer
(6) Oil Seal
(A) Inner Wheel
(7) Ball Bearing
(8) Nut
(9) Rear Axle Case
(10) Strainght Pin
(11) Bolt
(B) Outer Wheel
(12) Stud
(13) Nut
(14) Spring Washer
(15) Rear Axle Case Cover
(16) O-ring
(17) Bolt

1. Using bearing puller, pull out ball bearing(7) from the axle (1).
2. Straighten locking tab of the 55 gear (3) locking nut (8).
3. Disassembles 55 gear, spacker (5), and collar (4).
4. Loosen the attaching bolt (18) from the rear axle case cover(16). Pull out the axle and the cover.
5. Using a bearing puller, pull out the rear axle case cover (7) and bearing (2) from the axle.

Item	Tightening torque
Lock nut(8)	20 ~ 25 kgf-m
Rear axle cove mounting bolts	4.9 ~ 5.7 kgf-m

(When reassembling)

* Apply grease to the O-ring (17) and oil seal (6) contacted surface.
* Note the assembling direction and method for the oil seal.
* Disconnect the inner and outer wheels and assemble the inner wheel into the axle and outer wheel into the cover to prevent damage.
* Replace the lock nut, tighten and lock the tabs firmly.
* Remove the requid gasket and re-apply as loctite 5060 or equibalent.

MEMO

CK25/27/30/35

BRAKE

TABLE OF CONTENTS

1. SPECIFICATIONS 7-3

2. OPERATING PRINCIPLE 7-4

3. TROUBLESHOOTING 7-5

4. CHECK AND ADJUSTMENT 7-6

4.1 Clearance adjustment of brake pedal 7-6

4.2 Gap adjustment of stop switch 7-6

4.3 Clearance adjustment of hand brake (EU only) 7-7

4.4 Checking of brake lever 7-7

5. SERVICING 7-8

5.1 Disassembling and reassembling 7-8

5.1.1 Draining the transmission fluid 7-8

5.1.2 Rops / rear axle 7-9

5.1.3 Brake case and discs 7-10

5.1.4 Brake lever and axle drive gear shaft 7-12

5.2 Inspection for overhaul 7-13

5.2.1 Moving check of brake cam lever 7-13

5.2.2 Wear check of cam plate 7-13

5.2.3 Height check of cam plate and ball 7-13

5.2.4 Wear check of brake disc 7-13

5.2.5 Wear check of brake plate 7-14

1. SPECIFICATIONS

Item		Reference Value	Allowable Limit
Brake pedal	Clearance	25 ~ 35 mm (0.98 ~ 1.38 in.)	-
Difference between left and right when not depressing brake pedal	Deviation	5 mm (0.197 in.)	-
Brake pedal and stop switch	Clearance	0 ~ 1 mm (1 ~ 0.039 in.)	-
Between brake lever bush and brake shaft	Clearance	0.085 ~ 0.327 mm (0.00335 ~ 0.01287 in.)	0.3 mm (0.0012 in.)
Brake lever bush	I.D	20.060 ~ 20.281 mm (0.78976 ~ 0.79846 in.)	
Brake shaft	O.D	19.957 ~ 19.975 mm (0.78559 ~ 0.78621 in.)	
Cam plate	Flatness	0.3 mm (0.012 in.)	0.3 mm (0.012 in.)
Cam plate and ball	Height	20.09 ~ 20.10 mm (0.7909 ~ 0.7913 in.)	20.06 mm (0.7898 in.)
Brake disc	Thickness	4.6 ~ 4.8 mm (0.181 ~ 0.189 in.)	4.2 mm (0.165 in.)
Plate	Thickness	2.54 ~ 2.66 mm (0.1000 ~ 0.1047 in.)	2.10 mm (0.0433 in.)

2. OPERATING PRINCIPLE

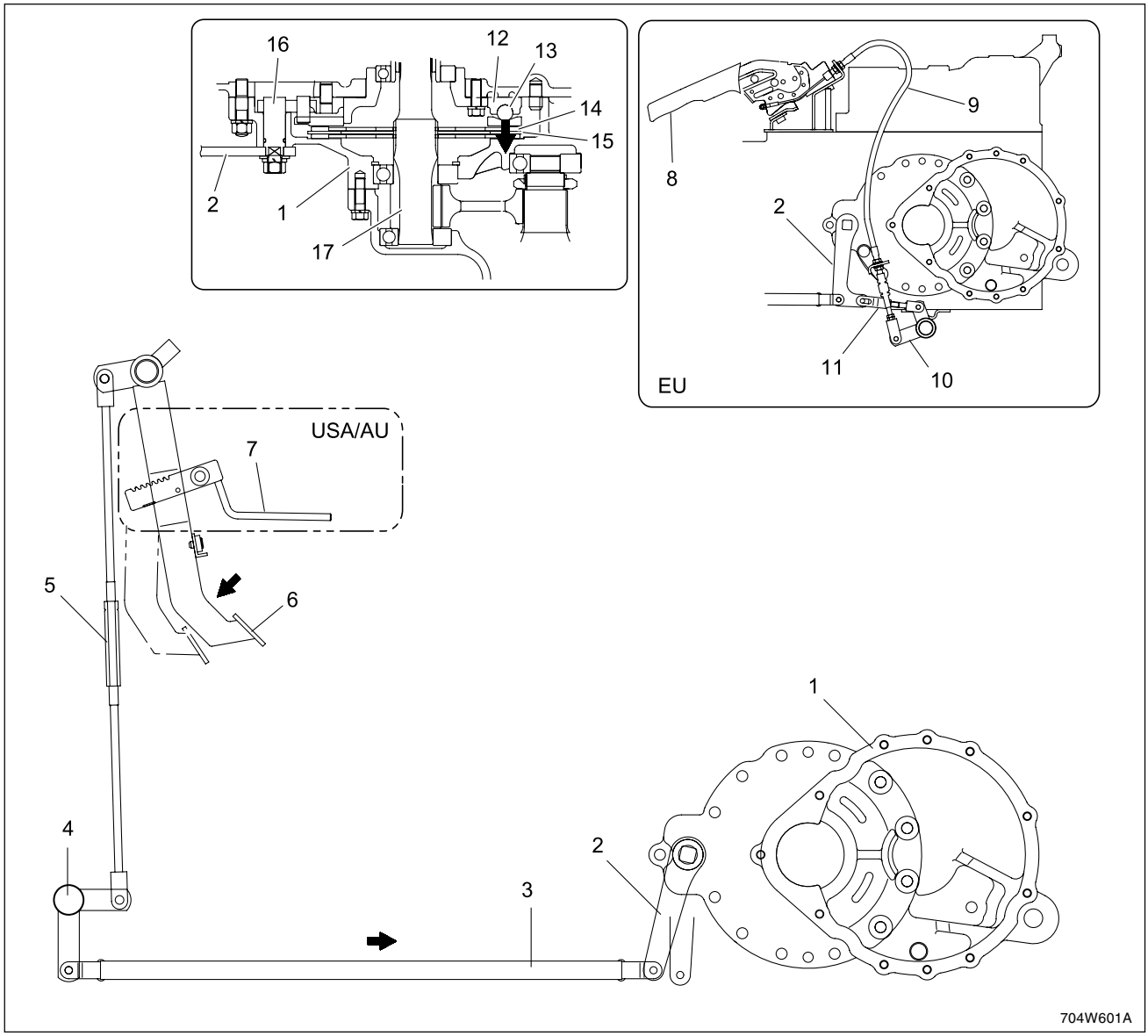

(1) Brake Case
(2) Brake Cam Lever
(3) Brake Rod
(4) Brake Lever
(5) Turn Buckle
(6) Brake Pedal
(7) Parking Brake Lever
(8) Parking Brake Lever
(9) Brake Cable
(10) Brake Lever
(11) Connecting Rod
(12) Cam Plate
(13) Ball
(14) Brake Disc
(15) Brake Plate
(16) Brake Cam
(17) 10 Gear Shaft

For the left and right running brake, an independent mechanical wet disc brake is used. It is operated through brake pedal by a mechanical linkage.

It activates the parking brake when parking. If a brake pedal is locked with the parking brake lever pulled up, it keeps the brakes locked.

The brakes are a wet disc type. They are designed to be more durable and to have more braking force than the inside expandable dry brakes.

When the brake pedal is depressed, the brake cam lever (2) will be moved in the direction of the arrow by linkage, as shown in the above figure. The cam plate (12) is rotated in the direction of the arrow and raised above the ball (13). The brake disc (14) is applied with pressure. As the brake disc is pressurized by the cam plate, it grips the gear shaft (17) by the frictional force of the disc, then the brakes are applied.

3. TROUBLESHOOTING

Symptom	Items	Remedy	Remark
Brake power is not constant	• Brake pedal clearance is not constant • Brake disc is worn • Cam plate is bent	Adjust Replace Replace	-
Brake is trailed	• Brake pedal clearance is too small • Cam plate ball is worn unequally • Brake pedal return spring is worn or broken • Brake cam is corroded (rust)	Adjust Replace Replace Replace	-
Brake power is weaken	• Brake pedal clearance is excessive • Brake disc is worn • Cam plate is bent • Brake cam or lever is worn • Transmission oil is improper.	Adjust Replace Replace Replace Change	-

4. CHECK AND ADJUSTMENT

4.1 CLEARANCE ADJUSTMENT OF BRAKE PEDAL

1. Disengage the brake pedal connection hook (1) and measure the clearance of left and right pedals.
2. If the clearance of the left ad right pedals exceeds the specified limit, loosen lock nut (2) and adjust clearance using a turn buckle (3).
3. After setting pedal clearance, tighten the lock nut firmly.

IMPORTANT

- ***Clearance of pedal should be equal on left and right.***

Sect.	Specified
Clearance of brake pedal (A)	20 ~ 30 mm 0.79 ~ 1.18 in.

Sect.	Specified
Gap between left and right when depressing brake pedal	Within 3 mm Within 0.197 in.

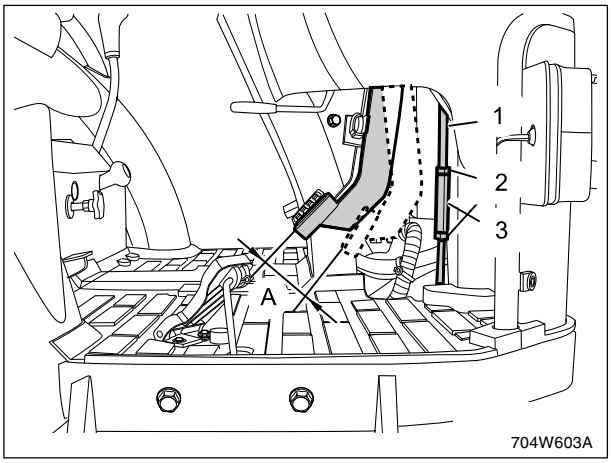

(1) Connection Hook (3) Turn Buckle
(2) Lock Nut

4.2 GAP ADJUSTMENT OF STOP SWITCH

1. Check the clearance between brake pedal (1) and the stop switch (2). If it exceeds in specified limit, loosen the lock nut (3) and reajust.

Sect.	Specified
Clearance between brake pedal and stop switch (B)	0 ~ 1 mm 0 ~ 0.039 in.

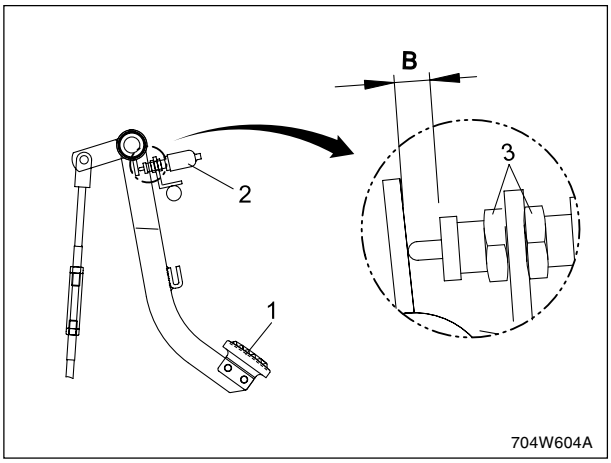

(1) Brake Pedal (3) Lock Nut
(2) Stop Switch

4.3 CLEARANCE ADJUSTMENT OF HAND BRAKE (EU ONLY)

1. Please adjust the parking brake wire by following the assembling dimensions as shown.

   (A) : 16 mm (B) : 14 mm

   (C): 160 mm (D) : 106 mm
2. Please be careful not to bend the parking brake wire for assembling it.
3. Please fasten the nut securely not to be loosen the parking brake wire.

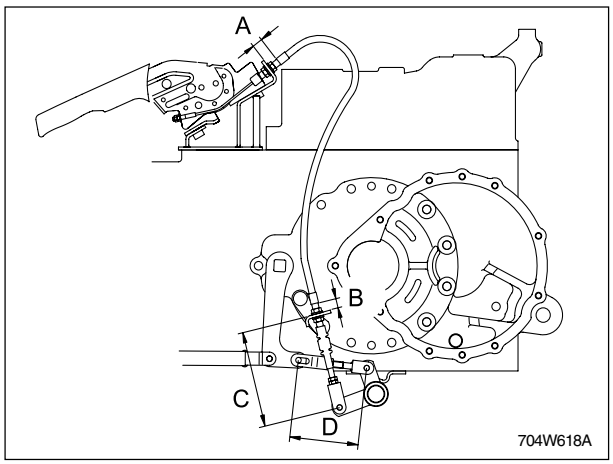

CAUTION

- ***The adjustment of the parking brake wire should be followed by adjusting the end play of the brake pedal.***

4.4 CHECKING OF BRAKE LEVER

Check the clearance between the brake lever bush and the brake shaft

1. Measure I.D. of the brake lever bush.
2. Measure O.D. of the brake shaft. Calculate the clearance.
3. Compare the clearance with the measured value. If it exceeds the allowable limit, replace the bush.

Sect.	Specified	Allowable Limit
Clearance between brake lever bush an brake shaft	0.085~0.327 mm (0.00335~0.01287 in.)	-
I.D. of brake lever bush	20.060~20.281 mm (0.78976~0.79846 in.)	-
O.D. of brake shaft	19.954~19.975 mm (0.78559~0.78642 in.)	-

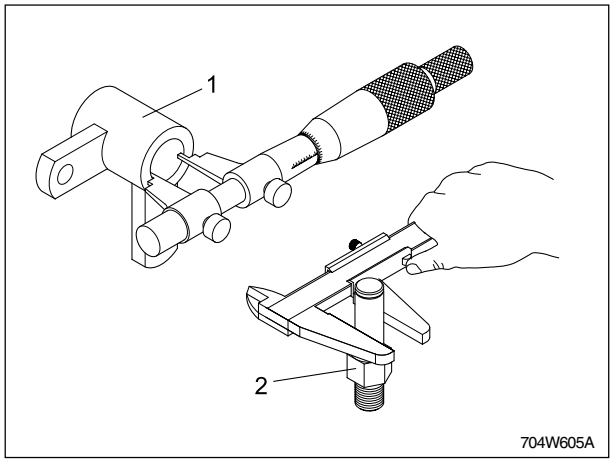

(1) Brake Lever Bush (2) Brake Shaft

5. SERVICING

5.1 DISASSEMBLING AND REASSEMBLING

5.1.1 DRAINING THE TRANSMISSION FLUID

CAUTION

To avoid personal injury:

- ***Allow the engine to cool down sufficiently, oil can be hot and can burn.***

1. To drain the used oil, remove the drain plug at the bottom of the transmission case and drain the oil completely into the oil pan.
2. After draining reinstall the drain plug.
3. Fill with the new **DAEDONG** TF65 fluid up to the upper line of the gauge.

   (See “LUBRICANTS” in Maintenance Section)
4. After running the engine for a few minutes, stop it and check the oil level again; add oil to prescribed level.

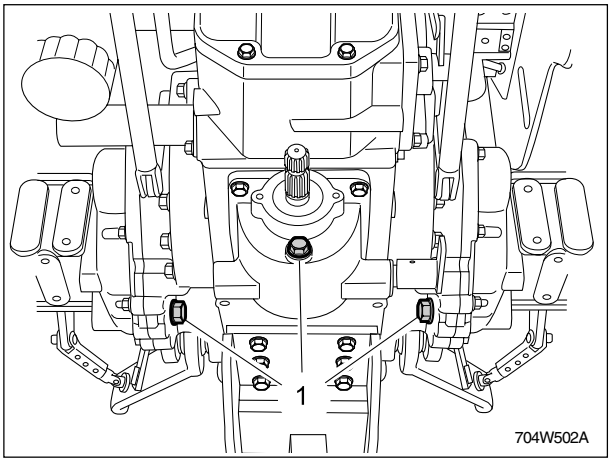

(1) Drain Plugs

Oil capacity	CK25/27/30/35	30 ℓ (7.13 U.S.gal.)
	CK25H/27H/30H/35H	27 ℓ (7.93 U.S.gal.)

IMPORTANT

- ***Do not operate the tractor immediately after changing the transmission fluid.***

  Run the engine at medium speed for a few minutes to prevent damage to the transmission.

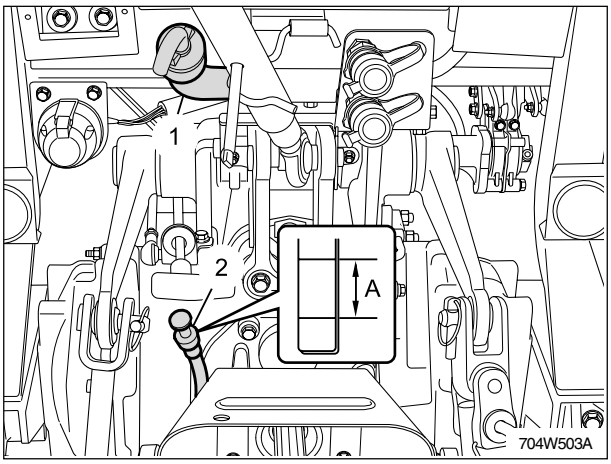

(1) Oil Filling Plug (2) Gauge

(A) Oil Level is Acceptable Within this Range

5.1.2 ROPS / REAR AXLE

1. Place the dissembling stand under the transmission case.
2. Remove the rear wheel mounting bolts, nuts and rear wheel.
3. Remove the lock pin, linch pin and rops from the rops support.
4. Remove the lower link, lift rod, stabilizer.
5. Remove the bolts and rops supports.

Item	Tightening torque
Rear wheel mounting nuts	255 ~ 304 Nm 26 ~ 31 kgf-m 5.3 ~ 6.3 lb-ft
Rear wheel mounting stud bolt	29.4 Nm 3 kgf-m 0.6 lb-ft
Rops support mounting bolts	137.3 Nm 14 kgf-m 2.9 lb-ft

6. Place the dissembling stand under the rear axle case.
7. Remove the bolts and nuts.
8. Separate the rar axle case from brake case.

Item	Tightening torque
Rear axle case mounting bolts and nuts	49.0 Nm 5 kgf-m 1.0 lb-ft

(When reassembling)

Check if gasket is damaged. Replace with new as needed.

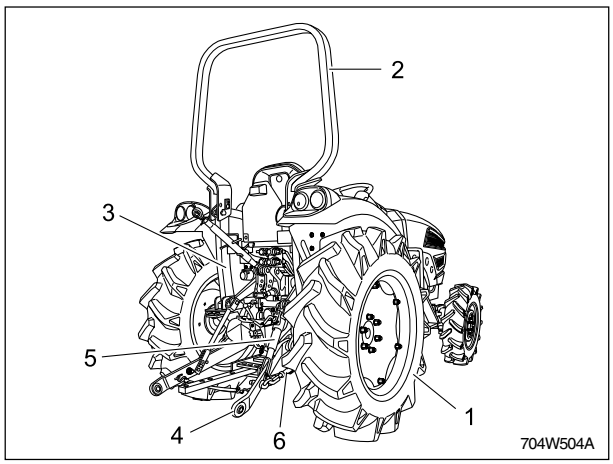

(1) Rear Wheel
(2) Rops
(3) Rops Support
(4) Lower Link
(5) Lift Rod
(6) Stabilizer

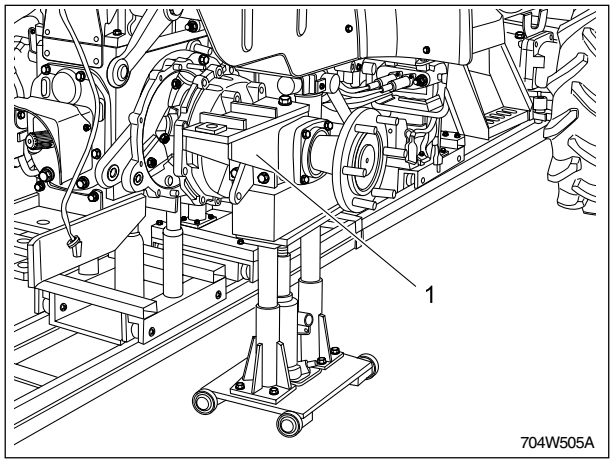

(1) Rear Axle Case

5.1.3 BRAKE CASE AND DISCS

1. Loosen the bolt and nut and disconnect the brake case.

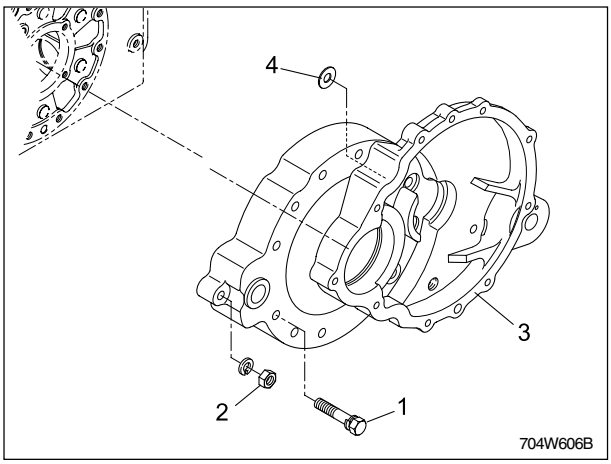

(1) Bolt
(2) Nut
(3) Brake Case
(4) Packing

(When reassembling)

- Align oil passage “A” of the brake discs. It should allow oil passage of at least 70%.
- Apply grease to the stell bass seats. (do not grease excessively)

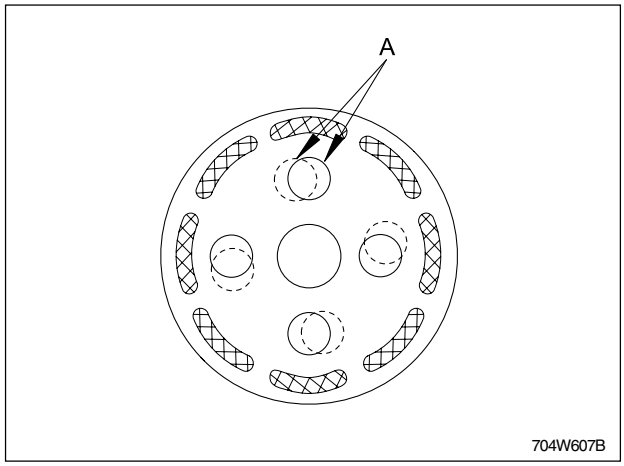

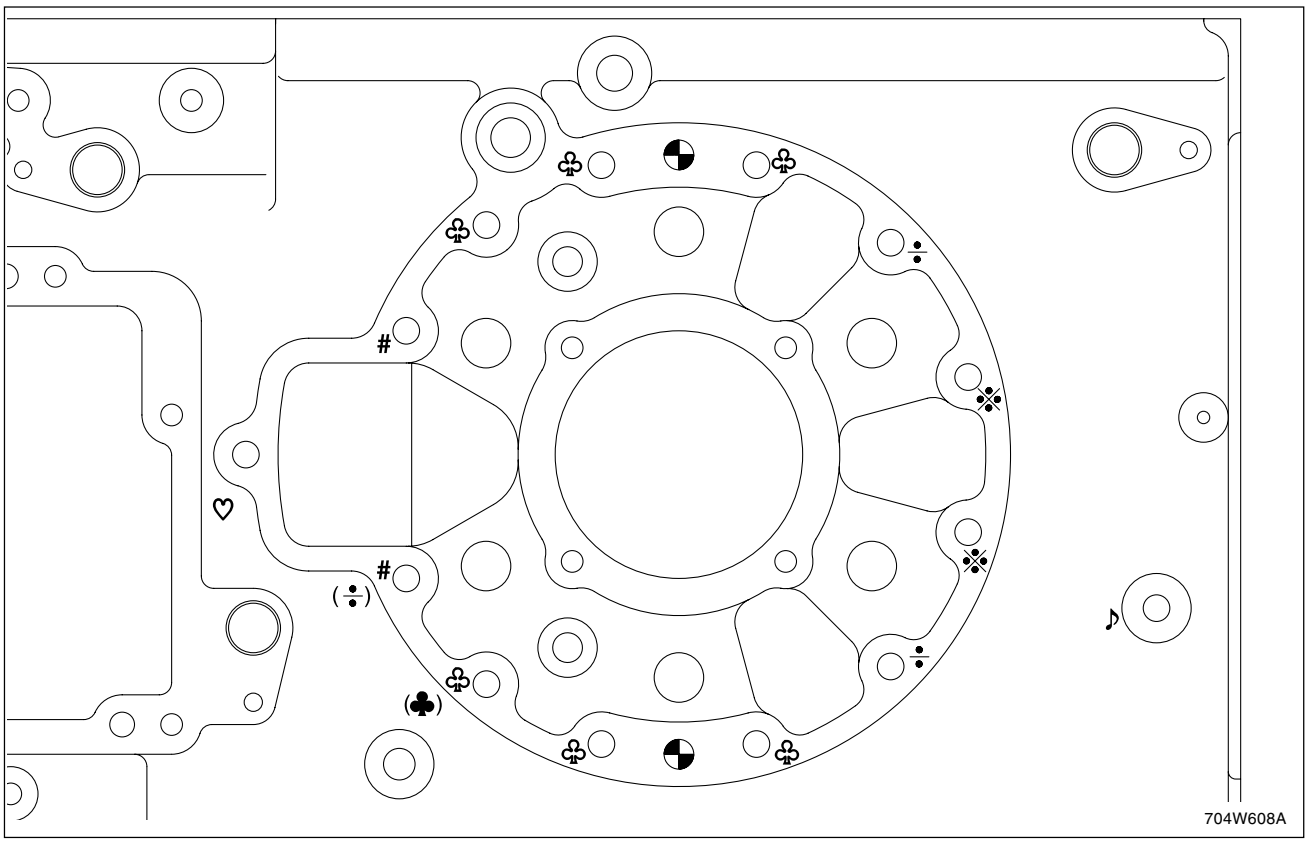

( ) : Only EU

BOLT, NUT ASSEMBLING POSITION AND TIGHTENING TORQUE

Applicable Model: CK25, CK25H, CK27, CK27H, CK30, CK30H, CK35, CK35H						
Assembling position (mark)	Part No.	Part name	Qty		Spec.	Tightening torque
			USA/AU	EU		
♡	01574-51240	Stud.	2	2	M12	Stud 29.5 ~ 49.0 Nm 3.0 ~ 5.0 kgf-m 21.7 ~ 36.1 lbf-ft Bolt 77.5 ~ 90.2 Nm 7.9 ~ 9.2 kgf-m 57.1 ~ 66.5 lbf-ft
♧	01173-51265	Bolt	12	11		
÷	01173-51270	Bolt	4	5		
♪	01574-51285	Stud.	2	2		
#	01173-51265	Bolt	4	3		
♣	01173-51270	Bolt	-	1		
※	T2185-28351	Bolt	4	4		

5.1.4 BRAKE LEVER AND AXLE DRIVE GEAR SHAFT

A. DISCONNECTION OF BRAKE CASE

1. Loosen the cam lever (1) and the attaching nut (2). Disconnect brake cam (3), O-ring (4) and brake cam lever.
2. Disconnect the Cam plate (5), brake disc (6) and plate (7).

(When reassembling)

- Apply grease to the O-ring. Take care not to damage it.
- Seat the brake disc into assembly position, and when the plate is pressed by hand, it should not move.

CAUTION

- ***Make sure assembly position of left and right cam plates is correct.***

Model	Part name	Assembly position
CK25, CK30	Cam plate (left)	Left of transmission case
	Cam plate (right)	Right of transmission case

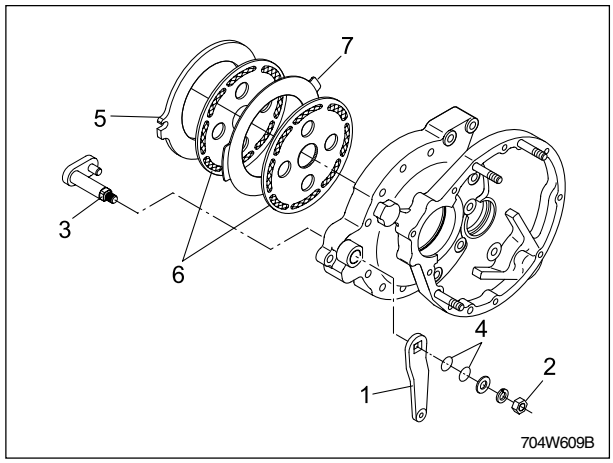

(1) Brake Cam Lever
(2) Nut
(3) Brake Cam
(4) O-ring
(5) Cam Plate
(6) Brake Disc
(7) Plate

B. DISASSEMBLY OF GEAR SHAFT

1. Pull out the snap ring (3) from the brake case (1).
2. Pull out the gear shaft (2) with the bearing.

(When reassembling)

- Rounding of snap ring should be toward the bearing.

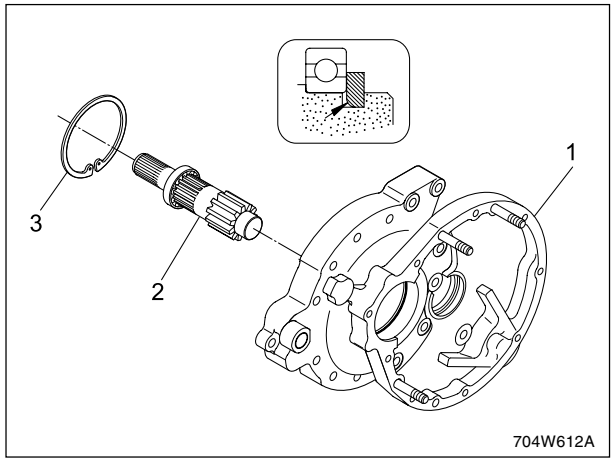

(1) Brake Case
(2) Gear Shaft
(3) Snap Ring

5.2 INSPECTION FOR OVERHAUL

5.2.1 MOVING CHECK OF BRAKE CAM LEVER

1. Move brake cam lever front to rear. Check for proper Operating.
2. If the Operating is not smooth, check the parts for excessive wear, and the correct dimensions.

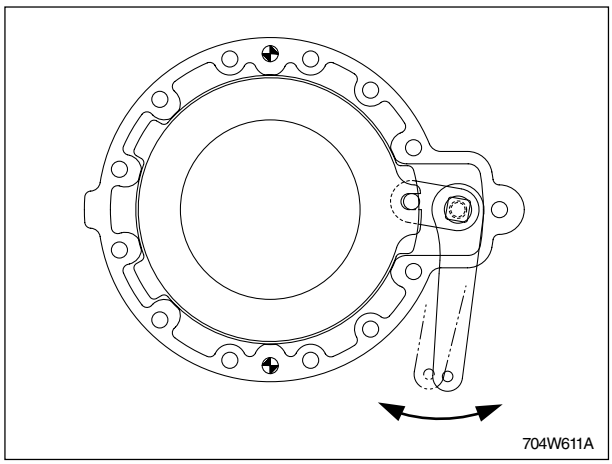

5.2.2 WEAR CHECK OF CAM PLATE

1. Check the brake disc contact surface on the cam plate for wear. Measure the flatness using a clearance gauge.
2. If it exceeding the allowable limit, replace it.

Sect.	Specified	Allowable limit
Flatness of cam plate	0.3 mm 0.012 in.	0.3 mm 0.012 in.

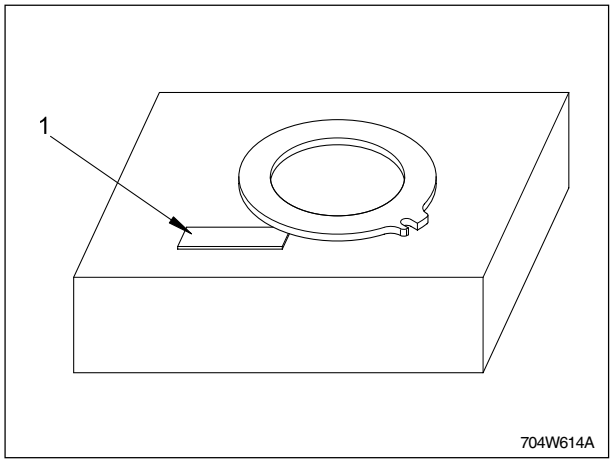

(1) Feeler Gauge

5.2.3 HEIGHT CHECK OF CAM PLATE AND BALL

1. Seat the ball into the cam plate and measure the height of the ball from the bottom of the cam plate.
2. If the measured value exceeds the allowable limit, replace the cam plate and ball.

Sect.	Specified	Allowable limit
Height of ball from bottom of cam plate (H)	20.9 ~ 21.1 mm 0.8228 ~ 0.8307 in.	20.5 mm 0.8071 in.

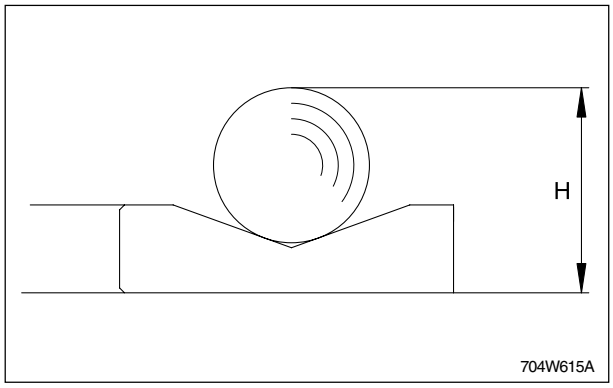

5.2.4 WEAR CHECK OF BRAKE DISC

1. Measure the thickness of the brake disc.
2. If the measured value exceeds the allowable limit, replace it.

Sect.	Specified	Allowable limit
Thickness of brake disc	4.60 ~ 4.80 mm 0.181 ~ 0.189 in.	4.2 mm 0.165 in.

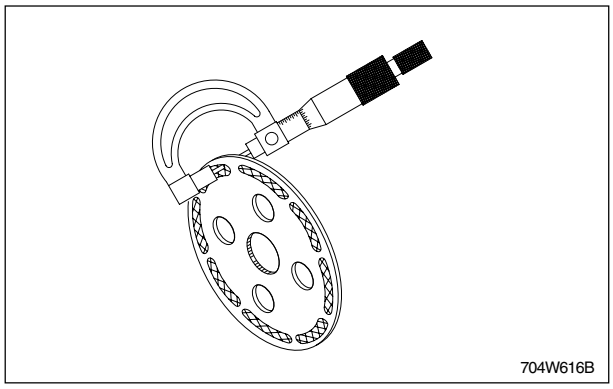

5.2.5 WEAR CHECK OF BRAKE PLATE

1. Measure the thickness of the brake plate.
2. If the measured value exceeds the allowable limit, replace it.

Sect.	Specified	Allowable limit
Thickness of brake plate	2.54 ~ 2.66 mm 0.1000 ~ 0.1047 in.	2.10 mm 0.0827 in.

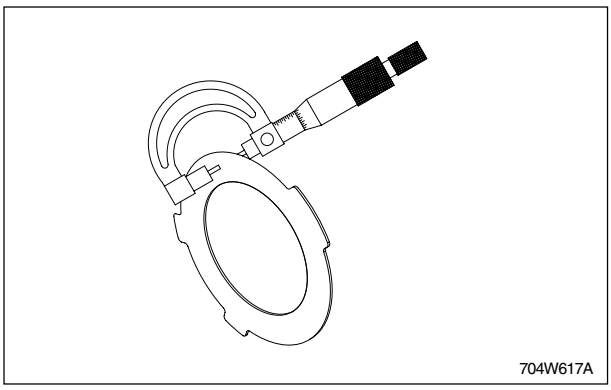

CK25/27/30/35

FRONT AXLE

TABLE OF CONTENTS

1. SPECIFICATIONS 8-3

2. OPERATING PRINCIPLE 8-5

2.1 Front axle structure 8-5

2.2 Wheel alignment 8-6

3. TROUBLESHOOTING 8-8

4. MEASUREMENT AND ADJUSTMENT 8-9

4.1 Toe-in 8-9

4.2 Toe-in adjustment 8-9

4.3 Rocking force of front axle 8-9

4.4 Axial sway of front wheel 8-10

4.5 Front wheel steering angle 8-10

5. SERVICING 8-11

5.1 Disassembling and assembling 8-11

5.1.1 Draining front axle case oil 8-11

5.1.2 Disconnecting hydraulic hoses 8-11

5.1.3 Disconnecting propeller shaft 8-12

5.1.4 Disconnecting tie-rod 8-12

5.1.5 Disassembling front axle 8-13

5.1.6 Dissembling bevel gear case from front axle support 8-13

5.1.7 Disassembling bevel gear case, front differential case and 42 bevel gear 8-14

5.1.8 Disassembling bevel gear case gears 8-15

5.1.9 Disassembling axle 8-15

5.1.10 Disassembling spiral bevel pinion shaft and differential gear assembly 8-16

5.1.11 Pre-load of taper roller bearing on spiral bevel pinion shaft 8-17

5.1.12 Disassembling differential gear 8-18

5.2 Inspection for overhaul 8-19

5.2.1 Clearance between differential case and differential side gear 8-19

5.2.2 Clearance between pinion shaft and differential pinion 8-19

5.2.3 Backlash between differential pinion and differential side gear 8-20

5.2.4 Backlash between spiral bevel pinion shaft and spiral bevel gear 8-21

5.2.5 Backlash between 11 bevel gear and 16 bevel gear 8-22

5.2.6 Backlash between 11 bevel gear and 42 bevel gear 8-22

5.2.7 Clearance between front axle case bosses and bracket bushings 8-23

1. SPECIFICATIONS

Item		Factory Specification	Allowable Limit
Front wheel alignment	Toe-in	2 ~ 8 mm 0.08 ~ 0.31 in.	-
Front wheel	Axial sway	Less than 5 mm 0.20 in.	-
Front axle	Rocking force	49.0 ~ 117.7 N 5.0 ~ 12.0 kgf 11.0 ~ 26.5 lbs	-
Front axle case boss (front) to bracket bushing	Clearance	0.080 ~ 0.222 mm 0.00315 ~ 0.00874 in.	0.35 mm 0.0138 in.
Front axle case boss (front)	O.D.	49.975 ~ 50.000 mm 1.96752 ~ 1.96850 in.	-
Bushing	I.D.	50.080 ~ 50.197 mm 1.97165 ~ 1.97626 in.	-
Front axle case boss (rear) to bracket bushing	Clearance	0.100 ~ 0.292 mm 0.00394 ~ 0.01150 in.	0.35 mm 0.0138 in.
Front axle case boss (rear)	O.D.	84.965 ~ 85.000 mm 3.34508 ~ 3.34646 in.	-
Bushing	I.D.	85.100 ~ 85.257 mm 3.35039 ~ 3.35657 in.	-
Differential case, 21 bevel gear to differential side gear	Clearance	0.050 ~ 0.091 mm 0.00197 ~ 0.00358 in.	0.35 mm 0.0138 in.
Differential case	I.D.	32.025 ~ 32.050 mm 1.26083 ~ 1.26181 in.	-
Differential case cover bore	I.D.	32.025 ~ 32.050 mm 1.26083 ~ 1.26181 in.	-
Differential side gear	O.D.	31.959 ~ 31.975 mm 1.25823 ~ 1.25886 in.	-
Pinion shaft to differential pinion	Clearance	0.016 ~ 0.052 mm 0.00063 ~ 0.00205 in.	0.25 mm 0.0098 in.
Pinion shaft	O.D.	15.966 ~ 15.984 mm 0.62858 ~ 0.62929 in.	-
Differential pinion	I.D.	16.000 ~ 16.018 mm 0.62992 ~ 0.63063 in.	-
Differential pinion to differential side gear	Backlash	0.1 ~ 0.3 mm 0.004 ~ 0.012 in.	-
Shim	Thickness	0.8 mm 0.0315 in.	-
		1.0 mm 0.0394 in.	-
		1.2 mm 0.0472 in.	-

Item		Factory Specification	Allowable Limit
Spiral bevel pinion shaft (Pinion shaft only)	Turning torque	0.98 ~ 1.176 N.m 0.1 ~ 0.12 kgf.m 0.72 ~ 0.864 lbf.ft	-
Spiral bevel pinion shaft to spiral bevel gear	Backlash	0.1 ~ 0.3 mm 0.0078 ~ 0.0118 in.	-
11 bevel gear to 16T bevel gear	Backlash	0.15 ~ 0.35 mm 0.0059 ~ 0.0138 in.	- -
Shim	Thickness	0.4 mm 0.0157 in.	-
		0.6 mm 0.0236 in.	-
		0.8 mm 0.0315 in.	-
		1.0 mm 0.0394 in.	1.4 mm 0.0551 in.
		1.2 mm 0.0472 in.	-
11 bevel gear to 42 bevel gear	Backlash	0.15 ~ 0.35 mm 0.0059 ~ 0.0138 in.	-
Shim	Thickness	1.0 mm 0.0394 in.	-
		1.2 mm 0.0472 in.	-
		1.4 mm 0.0551 in.	-
		1.6 mm 0.0830 in.	-
		1.8 mm 0.0709 in.	2.2 mm 0.0866 in.
		2.0 mm 0.0787 in.	-
		2.2 mm 0.0866 in.	

2. OPERATING PRINCIPLE

2.1 FRONT AXLE STRUCTURE

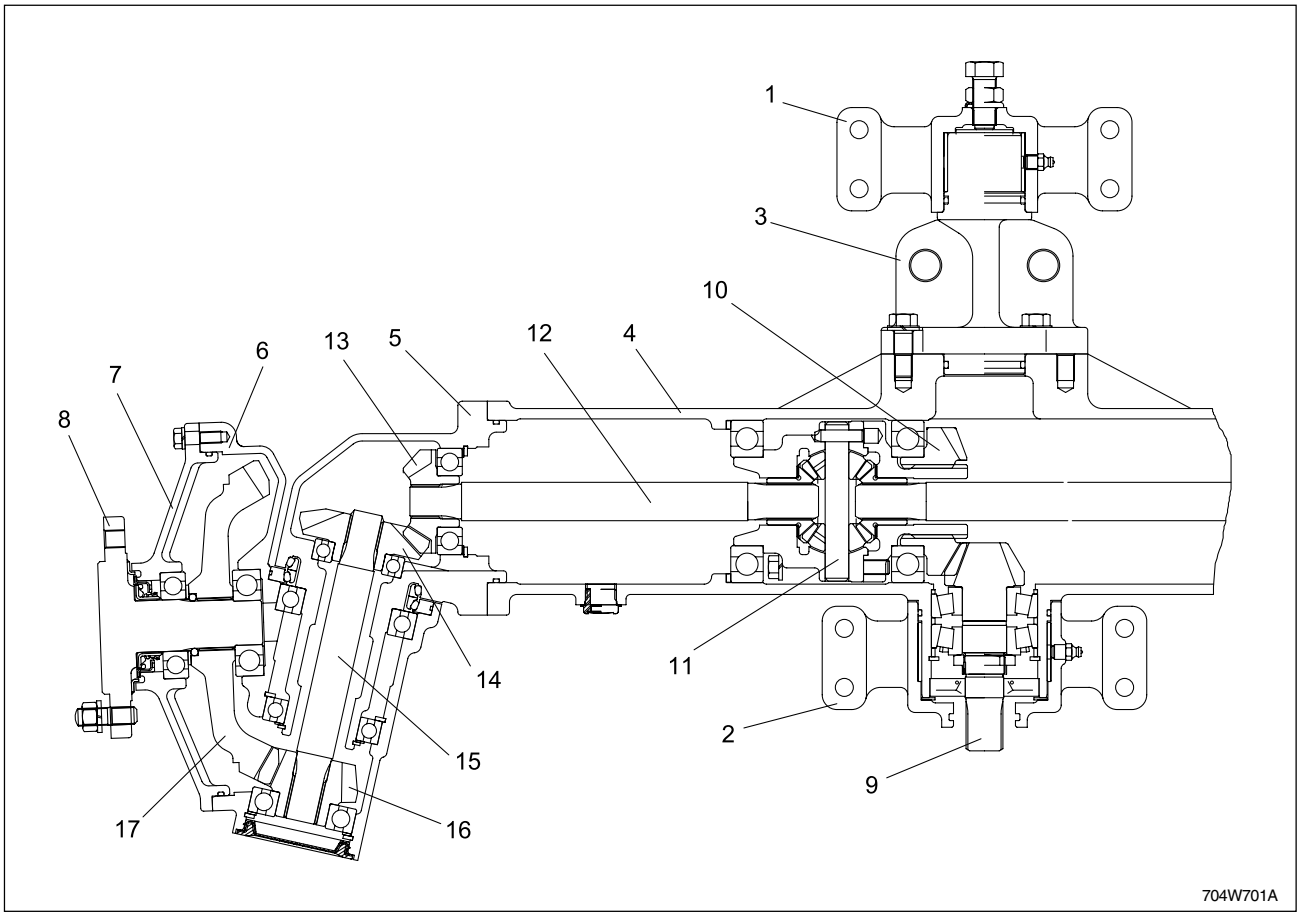

(1) Front Bracket
(2) Rear Bracket
(3) Center Pin
(4) Front Axle Support
(5) Bevel Gear Case
(6) Front Axle Case
(7) Front Axle Cover
(8) Front Axle
(9) Spiral Bevel Pinion Shaft
(10) Spiral Bevel Gear
(11) Pinion Shaft
(12) Differential Gear Shaft (LH)
(13) 11 Bevel Gear
(14) 16 Bevel Gear
(15) Bevel Gear Shaft
(16) 11 Bevel Gear
(17) 42 Bevel Gear

The front axle is constructed as shown above. Power is transmitted from the transmission through the propeller shaft, to the spiral bevel pinion shaft (9), then to the spiral bevel gear (10), and finally to the differential gear. The power through the differential is transmitted to the differential gear shaft (12), and to the bevel gear shaft (15), in the bevel gear case (5).

The revolution is greatly reduced by the bevel gear (16), (17), and then the power is transmitted to the front axle (8).

The differential system allows each wheel to rotate at a different speed to make turning easier.

2.2 WHEEL ALIGNMENT

To improve control and safety running, front wheel is applied with adequate inclination, called caster, camber, kingpin angle, and tow.

1. Camber reduces the bending or twisting of the front axle caused by vertical load or running resistance. It also maintains the stability while running.

   Camber angle (a) = 2°

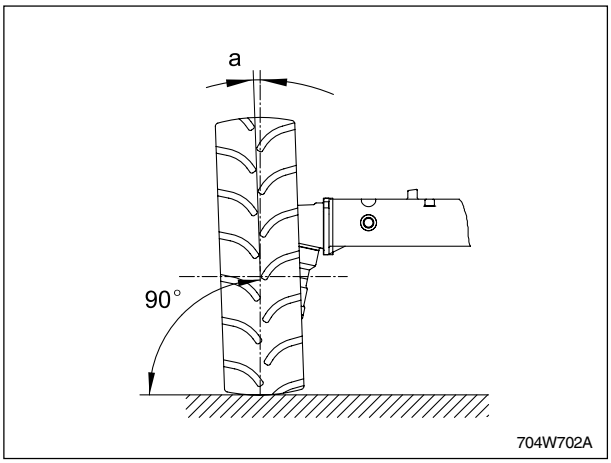

2. Caster helps provide steering stability.

   Caster angle (c) = 1.5°

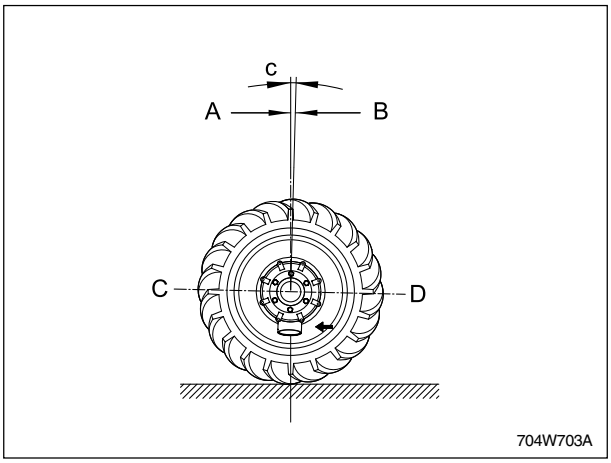

(A) Perpendicular (C) Front
(B) Kingpin Center Line (D) Rear

3. Kingpin angle reduces the rolling resistance of the wheels, and prevents any shimmy motion in the steering linkages.

   King pin angle (b) = 12.5°

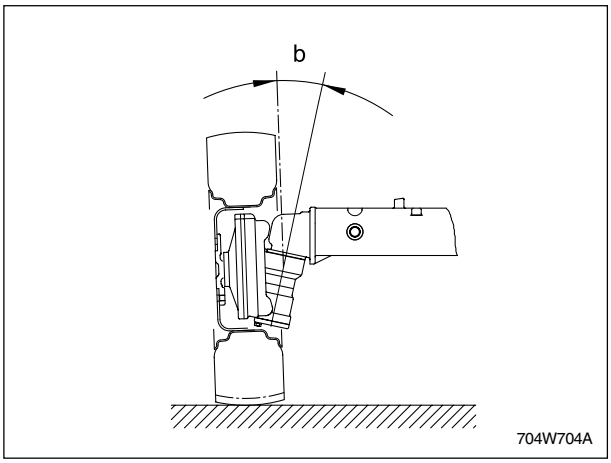

4. The front wheels tend to roll outward due to the camber, but toe-in offsets it and ensures parallel rolling of the front wheels. Another purpose of toe-in is to prevent excessive and uneven wear of tires.

   Tow-in (B-A) = 2 ~ 8 mm

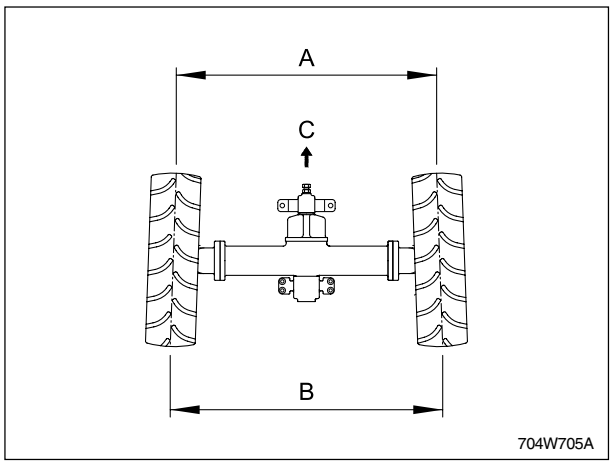

(C) Front

3. TROUBLESHOOTING

Symptom	Provable Causes	Solution
Front wheels wander to right or left	• Tire pressure uneven	Adjust
	• Improper toe-in adjustment (improper alignment)	Adjust
	• Clearance between front axle case boss and front axle bracket (front, rear) bushing excessive.	Replace
	• Front axle rocking force too small	Adjust
	• Front wheel sway excessive	Replace
	• Tie-rod end loose	Tighten
	• Air sucked in power steering circuit	Bleed
Front wheel can not be driven	• Propeller shaft broken	Replace
	• Front wheel drive gears in transmission broken	Replace
	• Front differential gear broken	Replace
	• Shift fork broken	Replace
	• Coupling displaced	Reassemble
Noise	• Gear backlash excessive	Adjust or replace
	• Oil insufficient	Replenish
	• Bearings damaged or broken	Replace
	• Gears damaged or broken	Replace
	• Spiral bevel pinion shaft turning force improper	Adjust

4. MEASUREMENT AND ADJUSTMENT

4.1 TOE-IN

1. Apply specified air pressure to the tires.
2. Measure the front width (A) and the rear width (B) between the front wheels while straightened to obtain the difference (toe-in).
3. If the toe-in value is outside the spec, adjust it.

Item	Factory spec.
Toe-in (B-A)	2 ~ 8 mm 0.08 ~ 0.31 in.

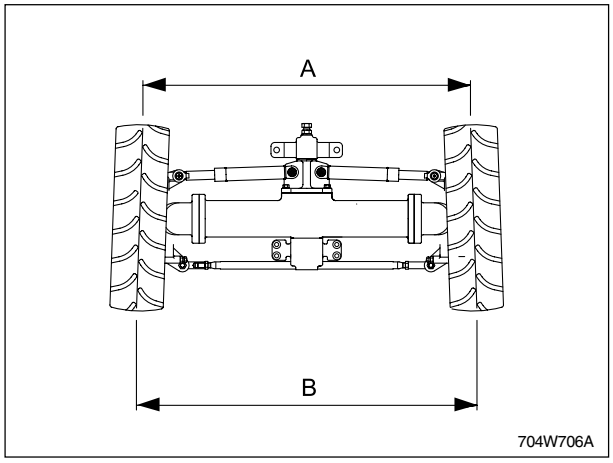

(A) Front Width (B) Rear Width

4.2 TOE-IN ADJUSTMENT

1. Loosen the lock nuts (1).
2. Turn the tie-rod (2) until to be factory specification.
3. Tighten the lock nuts (1).

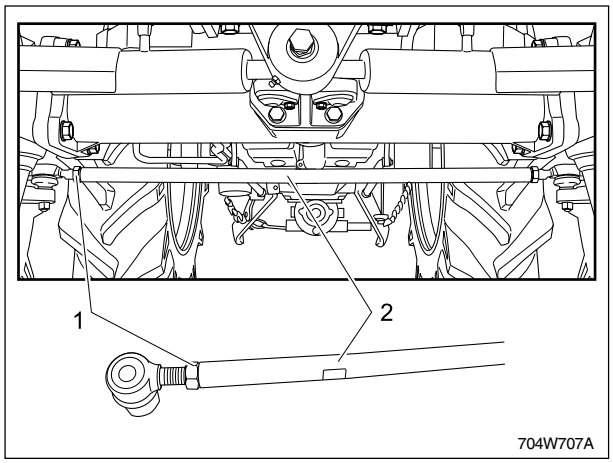

(1) Lock Nut (2) Tie-Rod

4.3 ROCKING FORCE OF FRONT AXLE

1. Jack up the front side of tractor and remove the front wheel.
2. Set a spring balance onto the front axle.
3. Measure the front axle rocking force.
4. If the measurement is not within the factory specifications, adjust with the adjusting screw (1).
5. Tighten the lock nut (2) firmly.

Item	Factory spec.
Front axle rocking force	49.0 ~ 117.7 N 5.0 ~ 12.0 kgf 11.0 ~ 26.5 lbs

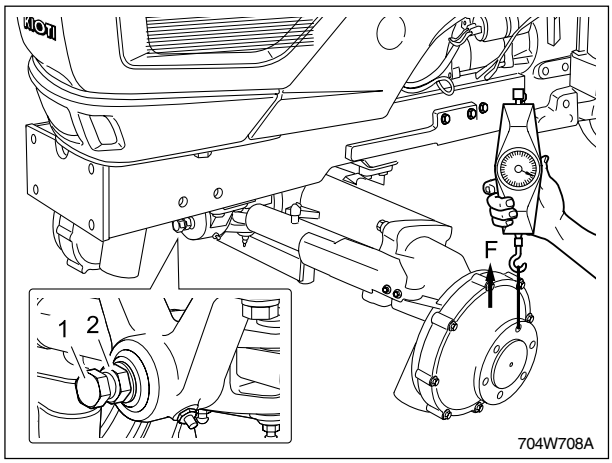

(1) Adjusting Screw (2) Lock Nut

4.4 AXIAL SWAY OF FRONT WHEEL

1. Jack up the front side of tractor.
2. Set a dial gauge on the outside of the rim.
3. Turn the wheel slowly and read the runout of rim.
4. If the runout exceeds the factory specifications, check the bearing, rim, and front wheel hub.

Item	Factory spec.
Axial sway of front wheel	Less than 5.0 mm 0.20 in.

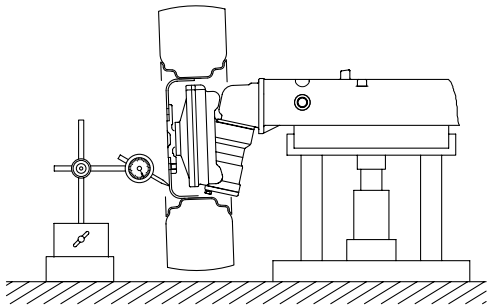

4.5 FRONT WHEEL STEERING ANGLE

1. Inflate the tires to the specified pressure.
2. Loosen the lock nut and shorten the length of stopper bolt LH (1).
3. Steer the wheels to the extreme left.
4. Lengthen the length of stopper bolt (1) until the stopper bolt contacts with the bevel gear case (3).
5. Return the steering wheel to the straight ahead and lengthen the stopper bolt a half turn from the above position.
6. Lock the stopper bolt with the lock nut (2).
7. For adjusting the right steering angle, perform the same procedure as mentioned in the left steering angle.

Item	Factory spec.
Length of adjusting bolt (A)	35 mm 1.378 in.
Steering angle	51 ~ 53° 0.89 ~ 0.92 rad

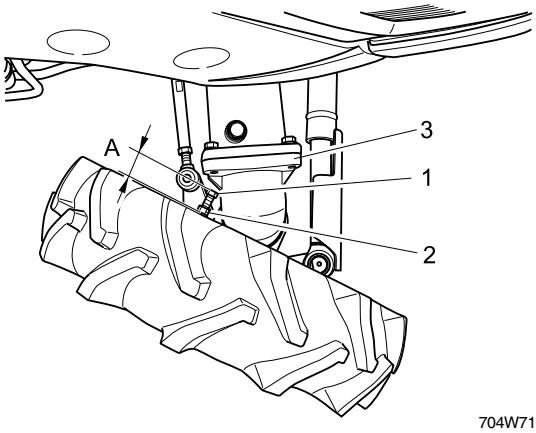

(1) Stopper Bolt
(2) Lock Nut
(3) Bevel Gear Case

5. SERVICING

5.1 DISASSEMBLING AND ASSEMBLING

5.1.1 DRAINING FRONT AXLE CASE OIL

1. Place oil pans underneath the front axle case.
2. Remove the drain plug (2) from left side and filling port plug from right side to drain the oil.
3. After draining, reinstall the drain plugs (2) and filling port plug.

(When refilling)

- Remove the filling port plug and the check plug (1).
- Fill with oil up to the check plug port.
- After filling, reinstall the check plug (1) and filling port plug.

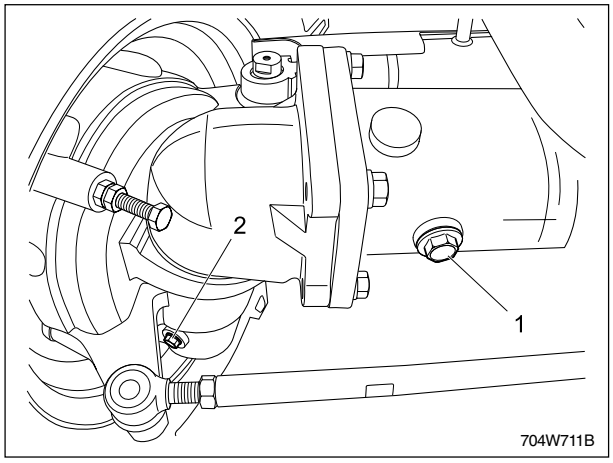

(1) Check Plug (2) Drain Plug

Item	Factory spec.
Front axle case oil	4.5 ℓ 1.19 U.S.gal.

IMPORTANT

- ***Use SAE 80, 90 gear oil. Refer to "LUBRICANTS, FUEL AND COOLING WATER".***

5.1.2 DISCONNECTING HYDRAULIC HOSES

1. Remove the steering hoses.

(When reassembling)

Item	Tightening torque
Steering hoses	24.5 ~ 29.4 Nm 2.5 ~ 3.0 Kgf-m 18.1 ~ 21.7 lbs-ft

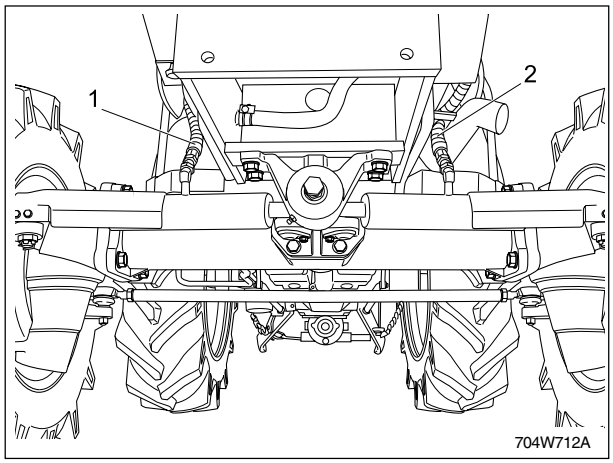

(1) Steering Hose (R) (2) Steering Hose (L)

5.1.3 DISCONNECTING PROPELLER SHAFT

1. Remove the bolts(10) from the propeller shaft covers (5) & (4). Slide the covers to remove.
2. Loosen the snap ring(3) and move it to the rear.
3. Tap out the spring pin (8), and then slide the coupling (2) to the rear.

(When reassembling)

- Apply grease to the splines of the propeller shaft.

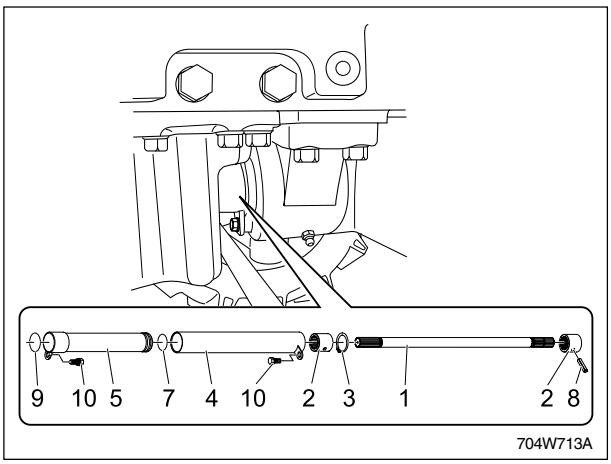

(1) Propeller Shaft
(2) Coupling
(3) Snap-ring
(4) Propeller Shaft Cover 1
(5) Propeller Shaft Cover 2
(6) O-ring
(7) O-ring
(8) Spring Pin
(9) O-ring
(10) Bolt

5.1.4 DISCONNECTING TIE-ROD

1. Remove the tie-rod.

   In this case, take special care not to damage the tie-rod (1) and slotted nuts (2).

(When reassembling)

Item	Tightening torque
Slotted nut	39.3 ~ 49.1 Nm 4.0 ~ 5.0 Kgf-m 29.0 ~ 36.1 lbs-ft
Tie-rod lock nut	166.8 ~ 191.3 Nm 17.0 ~ 19.5 Kgf-m 122.9 ~ 141.0 lbs-ft

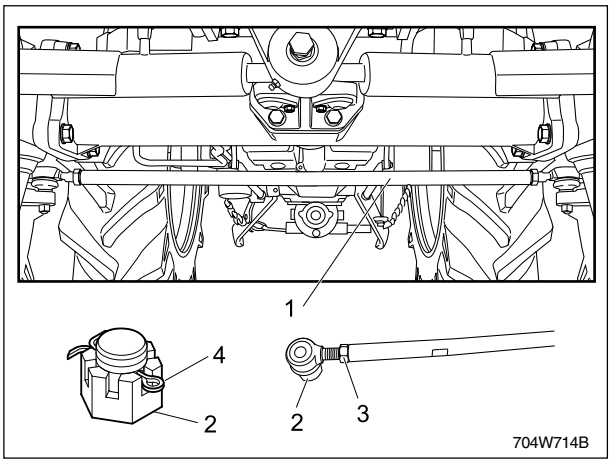

(1) Tie-Rod
(2) Slotted Nut
(3) Tie-Rod Lock Nut
(4) Split pin

5.1.5 DISASSEMBLING FRONT AXLE

1. Place the jacks under the front axle, and hang up the bumper by a hoist to support it.
2. Remove the front braket mounting bolts and rear braket mounting bolts.
3. Separate the front axle from the front support.
4. Remove the front wheels.

Item	Tightening torque
Front bracket bolts	77.4 ~ 90.2 Nm 7.9 ~ 9.2 Kgf-m 56.9 ~ 66.2 lbs-ft
Rear bracket bolts	77.4 ~ 90.2 Nm 7.9 ~ 9.2 Kgf-m 56.9 ~ 66.2 lbs-ft
Front wheel mounting nuts	62.8 ~ 72.5 Nm 6.4 ~ 7.4 Kgf-m 46.3 ~ 53.5 lbs-ft
Front wheel mounting bolts	77.5 ~ 90.2 Nm 7.9 ~ 9.2 Kgf-m 57.2 ~ 66.5 lbs-ft
Front wheel mounting stud bolts	34.3 ~ 49.0 Nm 3.5 ~ 5.0 Kgf-m 25.2 ~ 36.1 lbs-ft

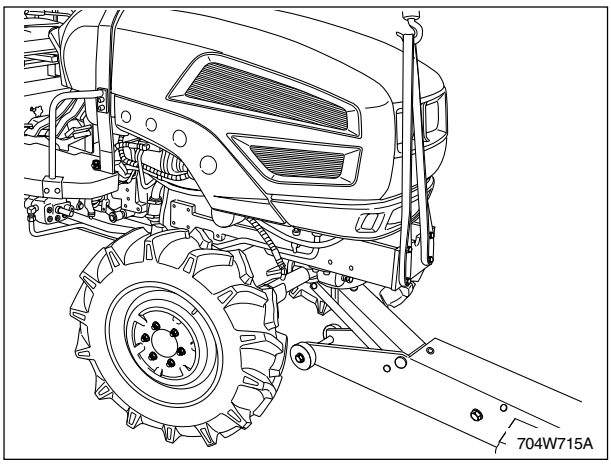

5.1.6 DISSEMBLING BEVEL GEAR CASE FROM FRONT AXLE SUPPORT

1. Remove the bevel gear case mounting bolts.
2. Remove the bevel gear case (3) and the front axle case (4) as a unit from the front axle support (1).

(When reassembling)

- Apply grease to the O-ring (2) and take care not to damage it.
- Do not interchange right and left bevel gear case assemblies and front axle case assemblies.

Item	Tightening torque
Bevel gear case mounting bolts	123.5 ~ 147.0 Nm 12.6 ~ 15.0 Kgf-m 91.2 ~ 108.4 lbs-ft

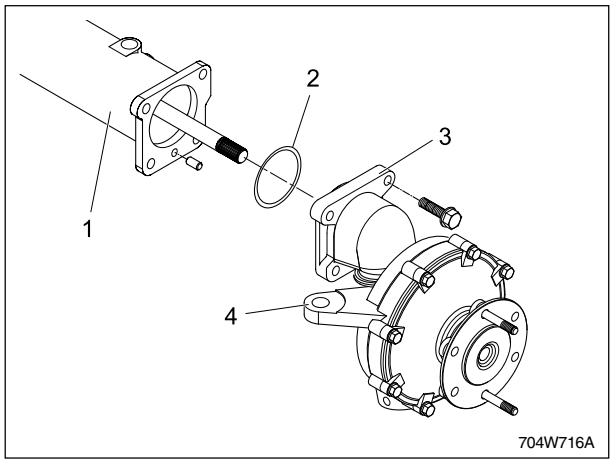

(1) Front Axle Support
(2) O-ring
(3) Bevel Gear Case
(4) Front Axle Case

5.1.7 DISASSEMBLING BEVEL GEAR CASE, FRONT DIFFERENTIAL CASE AND 42 BEVEL GEAR

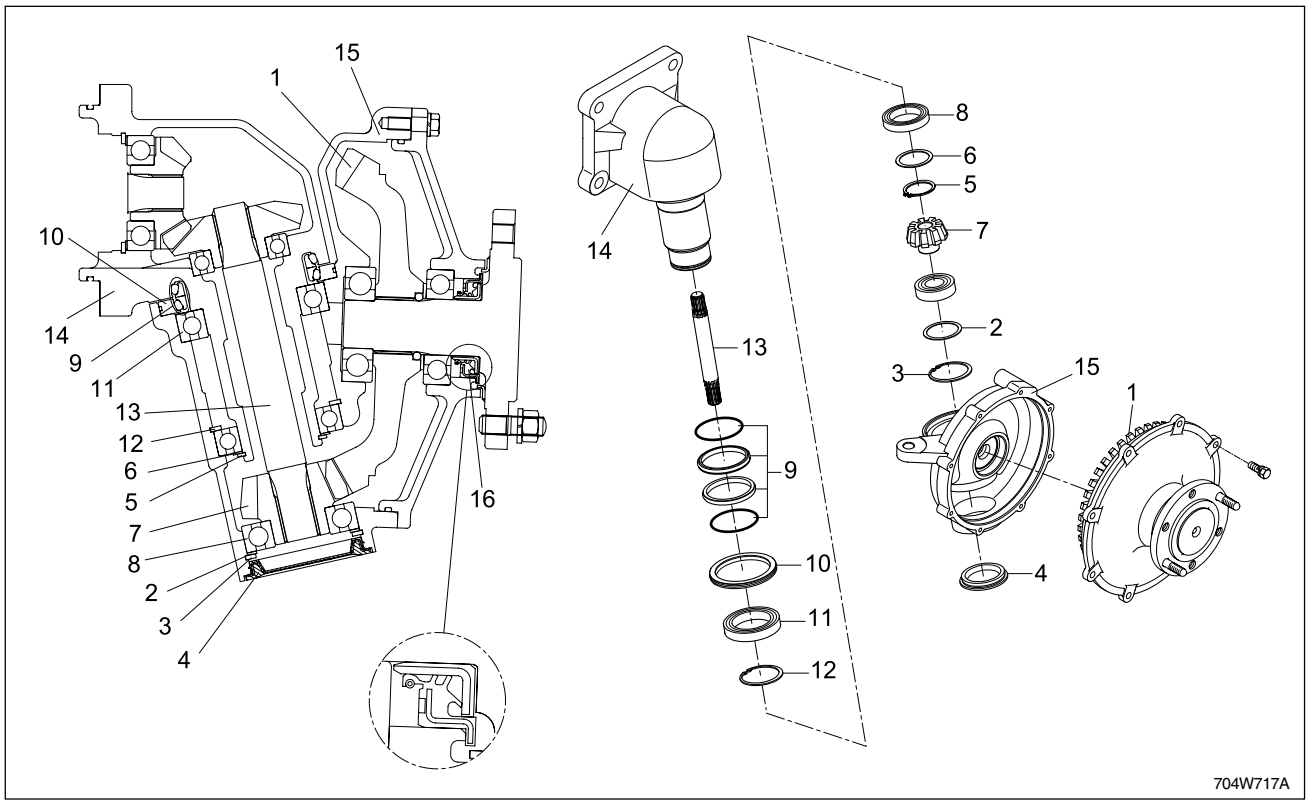

(1) 42 Bevel Gear
(2) Shim
(3) Snap Ring
(4) Plug
(5) Snap Ring
(6) Shim
(7) 11 Bevel Gear
(8) Bevel Bearing
(9) Floating Seal
(10) Housing
(11) Ball Bearing
(12) Snap Ring
(13) Bevel Gear Shaft
(14) Bevel Gear Case
(15) Front Axle Case
(16) Oil Seal

1. Remove the plug (4).
2. Remove the internal snap ring (3) and shim (2).
3. Remove the 42 bevel gear (1).
4. Tap out the bevel gear (7) and ball bearing.
5. Draw out the bevel gear shaft (13).
6. Remove the external snap ring (5) and shim(6).
7. Tap the bevel gear case (14), and separate it from the front differential case (15).

CAUTION

- ***Make sure the floating seal (9) is not damaged and the O-ring has not deteriorated with grease, oil, or other foreign matters.***

  FLOATING SEAL Assembling Method:

  Divede each O-ring and seal ring into 1 suit and assemble in bevel gear case and front axle case, making sure O-ring is not damaged using assembly fixture.

(When reassembling)

- Apply grease to the O-ring of the front axle cover.
- Tighten the axle flange mounting bolts and nuts diagonally in several steps.
- Install the oil seal (16) in the front axle cover, noting its direction as shown in the upper figure.

Item	Tightening torque
Front axle cover mounting bolts and nuts	23.6 ~ 27.4 Nm 2.4 ~ 2.8 Kgf-m 17.4 ~ 20.2 lbs-ft

5.1.8 DISASSEMBLING BEVEL GEAR CASE GEARS

1. Remove the internal snap ring (1) and shim.
2. Take out the bevel gears (4), (7) with ball bearings (3), (6) and shims (2).

(When reassembling)

- Install the same shims (2) which you removed.

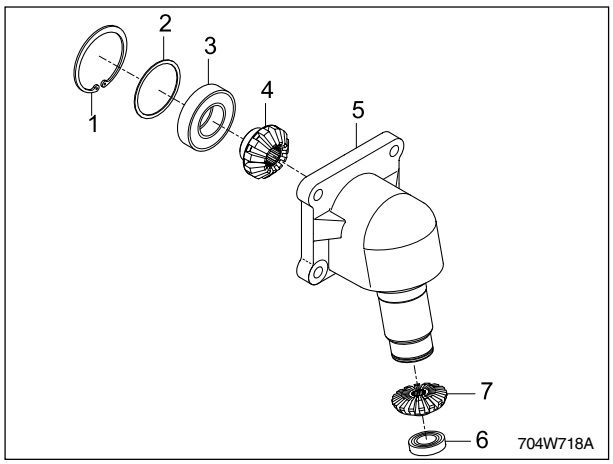

(1) Snap Ring
(2) Shim
(3) Ball Bearing
(4) 11 Bevel Gear
(5) Bevel Gear Case
(6) Ball Bearing
(7) 16 Bevel Gear

5.1.9 DISASSEMBLING AXLE

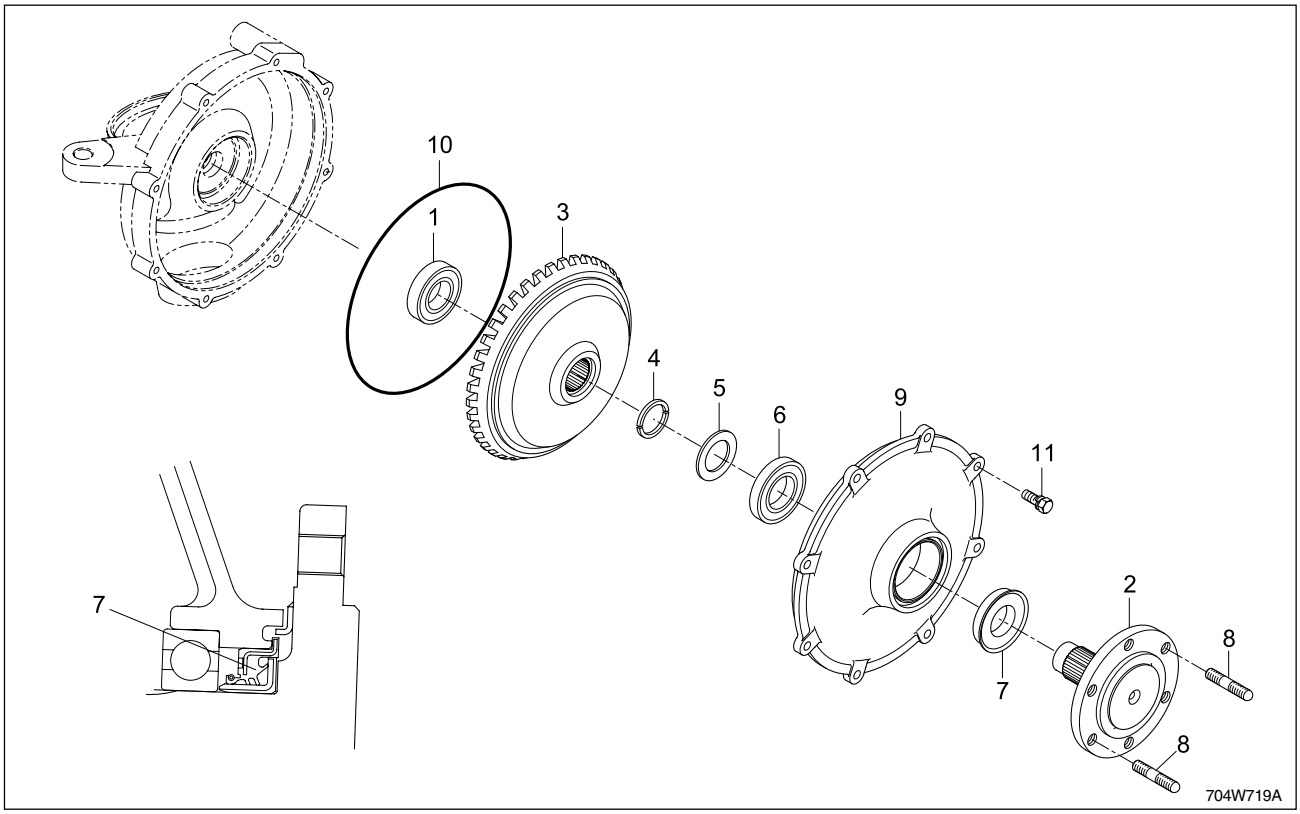

(1) Ball Bearing
(2) Front Axle
(3) 42 Bevel Gear
(4) Pin
(5) Spacer
(6) Ball Bearing
(7) Oil Seal
(8) Stud
(9) Front Axle Cover
(10) O-ring

1. Remove the bearing with a special use puller set.
2. Take out the 42 bevel gear (3).
3. Take out pin (4).
4. Tap out the front axle (2).

(When reassembling)

- Install the oil seal (7) of the front axle cover (9), noting its direction as shown in the figure.

5.1.10 DISASSEMBLING SPIRAL BEVEL PINION SHAFT AND DIFFERENTIAL GEAR ASSEMBLY

1. Take out both sides of the differential gear shaft (12)& (13).
2. Remove the oil seal (7) and the internal snap ring (6).
3. Remove the plug (11), and then tap out the spiral bevel pinion shaft (3) using a brass rod and hammer.
4. Take out the differential gear assembly (2), ball bearing and shim (14) from right side of the front axle case (1).
5. Remove the stake of lock nut (10), and then remove the lock nut (10).
6. Remove the taper roller bearings (8).

(When reassembling)

- Replace the lock nut (10), oil seal (7) with new ones.
- Apply grease to the oil seal (7).
- Install the same shims and collars in the same locations noted during disassembly.
- Install the taper roller bearings correctly, noting their direction, and apply gear oil to them.
- When press-fitting a oil seal (7), observe the dimension “A” described in the figure.
- Stake the lock nut (10) firmly.
- Tighten up the lock nut (10) until the turning torque of the spiral bevel pinion shaft reaches the factory specifications.

Item	Factory spec.
Spiral bevel pinion shaft turning torque	0.98 ~ 1.18 Nm 0.1 ~ 0.12 Kgf-m 0.72 ~ 0.89 lbs-ft

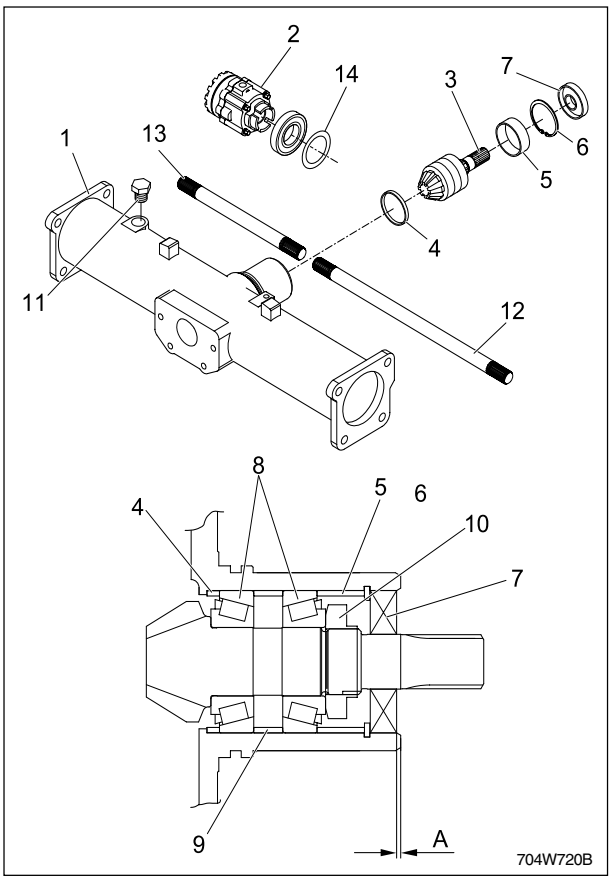

(A) 1 mm (0.039 in.)
(1) Front Axle Support
(2) Differential Gear Assemly
(3) Spiral Bevel Pinion Shaft
(4) Adjusting Collar
(5) Collar
(6) Snap Ring
(7) Oil Seal
(8) Taper Roller Bearings
(9) Collar
(10) Lock Nut
(11) Plug
(12) Differential Gear Shaft RH
(13) Differential Gear Shaft LH
(14) Shim

5.1.11 PRE-LOAD OF TAPER ROLLER BEARING ON SPIRAL BEVEL PINION SHAFT

IMPORTANT

- ***If measuring the pre-load of the bearing assembled to the front axle as shown in the figure (A), measure it before inserting the oil seal and installing the 23 bevel gear.***
- ***If measuring the pre-load while securing the spiral bevel shaft and taper roller bearing assembly with a vice as shown in the figure (B), cover the bearing cover with cloth.***

1. After wrapping the pinion shaft with a string, measure the load by pulling the string with a pull scale.

Item	Factory spec.
Load of pull scale	8.3 ~ 10 kgf 18.3 ~ 22 lbs

- When measuring the load by engaging torque wrench to spline of spiral bevel pinion shaft as shown in the figure (C):

Item	Tightening torque
Torque value	0.980 ~ 1.176 Nm 0.1 ~ 0.12 kgf-m 0.72 ~ 0.87 lbs-ft

- When measuring the load by a pull scale as shown in the figure (A, B):

$$\text{Load of pull scale (F) (kgf)} = \frac{\text{Torque value (T) (kgf-m)}}{\text{Radius of spline shaft (R)}}$$

$$F = \frac{0.1 \sim 0.12 \text{ kgf-m}}{R\ (0.0123 \text{ m})}$$

$$F = 8.3 \sim 10 \text{ kgf } (18.3 \sim 22 \text{ lbs})$$

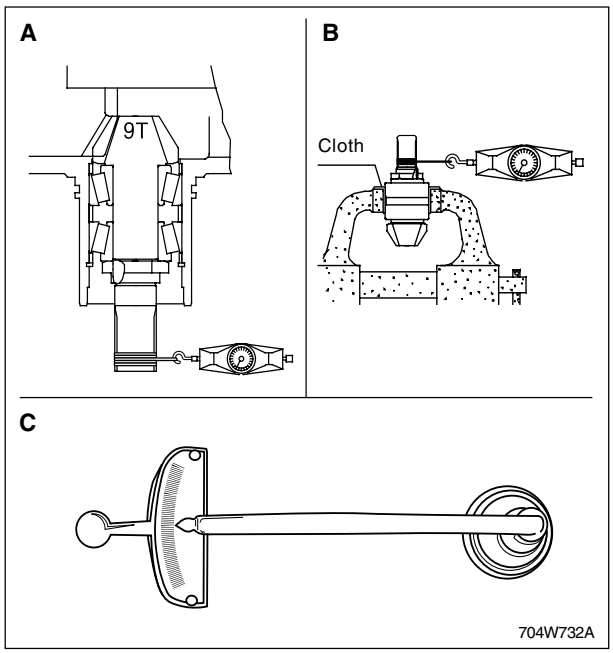

5.1.12 DISASSEMBLING DIFFERENTIAL GEAR

1. Remove the differential case cover mounting bolts (8) and then take out the differential case cover (5), ball bearing (6) and spiral bevel gear as a unit.
2. Remove the ball bearing (6) and spiral bevel gear as a unit with a puller.
3. Remove the straight pin (7).
4. Pull out the pinion shaft (9). Take out the differential pinions (4) and differential side gears (11).

NOTE:

- *Arrange the parts in their original position.*

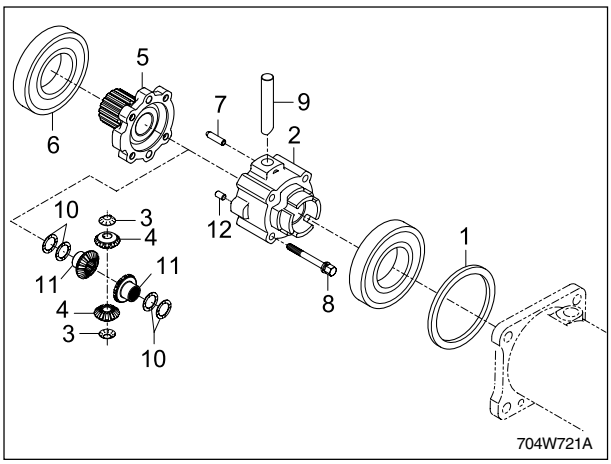

(1) Shim	(7) Straight Pin
(2) Differential Case	(8) Bolt
(3) Thrust Collar	(9) Pinion Shaft
(4) Differential Pinion	(10) Shim
(5) Differential Case Cover	(11) Differential Side Gear
(6) Ball Bearing	(12) Straight Pin

5.2 INSPECTION FOR OVERHAUL

5.2.1 CLEARANCE BETWEEN DIFFERENTIAL CASE AND DIFFERENTIAL SIDE GEAR

1. Measure the differential side gear boss O.D.
2. Measure the differential case bore I.D. and calculate the clearance.
3. Measure the differential case cover bore I.D. and calculate the clearance.
4. If the clearance exceeds the allowable limit, replace faulty parts.

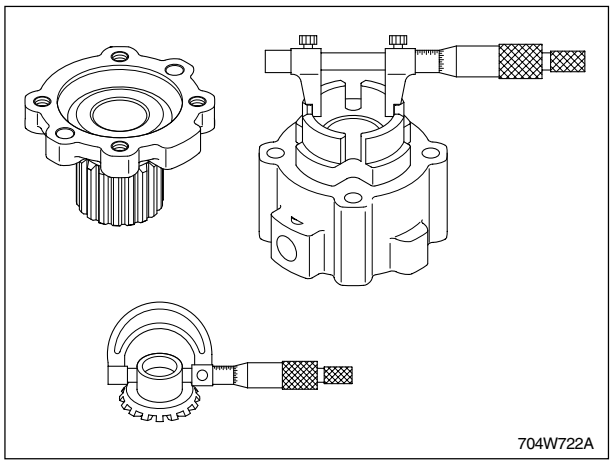

Item	Factory spec.	Allowable limit
Clearance between differential case (Differential case cover) and differential side gear	0.050 ~ 0.091 mm 0.00197 ~ 0.00358 in.	0.35 mm 0.0138 in.

Item	Factory spec.	Allowable limit
Differential case bore I.D.	32.025 ~ 32.050 mm 1.26083 ~ 1.26181 in.	-
Differential case cover bore I.D.	32.025 ~ 32.050 mm 1.26083 ~ 1.26181 in.	-
Differential side gear O.D.	31.959 ~ 31.975 mm 1.25823 ~ 1.25886 in.	-

5.2.2 CLEARANCE BETWEEN PINION SHAFT AND DIFFERENTIAL PINION

1. Measure the pinion shaft O.D.
2. Measure the differential pinion I.D. and calculate the clearance.
3. If the clearance exceeds the allowable limit, replace the faulty parts.

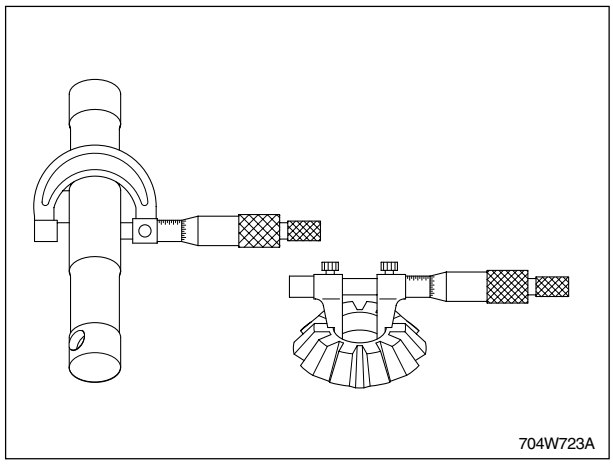

Item	Factory spec.	Allowable limit
Clearance between pinion shaft and differential pinion	0.016 ~ 0.052 mm 0.00063 ~ 0.00205 in.	0.25 mm 0.0098 in.

Item	Factory spec.	Allowable limit
Pinion shaft O.D.	15.966 ~ 15.984 mm 0.62858 ~ 0.62929 in.	-
Differential pinion I.D.	16.000 ~ 16.018 mm 0.62992 ~ 0.63063 in.	-

5.2.3 BACKLASH BETWEEN DIFFERENTIAL PINION AND DIFFERENTIAL SIDE GEAR

1. Set a dial gauge (lever type) on a tooth of the differential pinion.
2. Fix the differential side gear and move the differential pinion to measure the backlash.
3. If the measurement exceeds the factory specifications, adjust with the differential side gears shims.

Item	Factory spec.	Allowable limit
Backlash between differential pinion and differential side gear	0.1 ~ 0.3 mm 0.004 ~ 0.012 in.	-

(Reference)

- Thickness of adjusting shims:
  0.8 mm (0.0315 in.) 1.0 mm (0.0394 in.)
  1.2 mm (0.0472 in.)
- Tooth contact : More than 35 %
- Center of tooth contact:
  1/3 to 1/2 of the entire width from the small end.

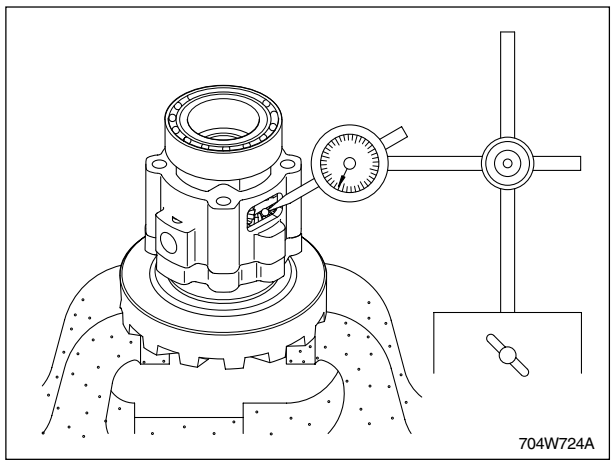

5.2.4 BACKLASH BETWEEN SPIRAL BEVEL PINION SHAFT AND SPIRAL BEVEL GEAR

1. Set a dial gauge (lever type) with its finger on the spline of spiral bevel pinion shaft.
2. Measure the backlash by moving the spiral bevel pinion shaft by hand lightly.
3. If the backlash is not within the factory specifications, change the adjusting collars (3), (4) and shim(5). Change the adjusting collar (4) to 0.1 mm (0.004 in.) smaller size, and change the adjusting collar (3) to 0.1 mm (0.004 in.) larger size.
4. Adjust the backlash properly by repeating the above procedures.

Item	Factory spec.
Backlash between spiral bevel pinion shaft and spiral bevel gear	0.1 ~ 0.3 mm 0.004 ~ 0.012 in.

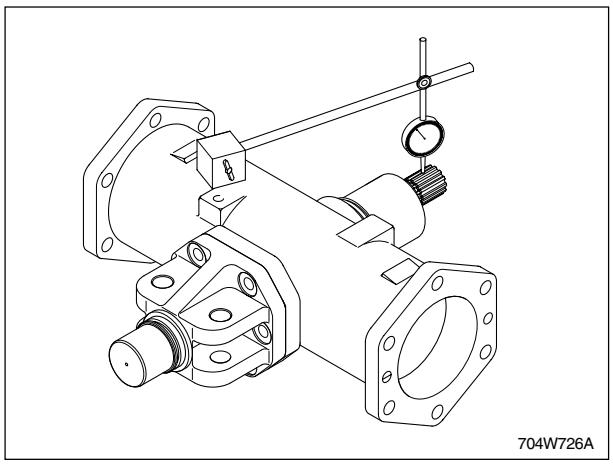

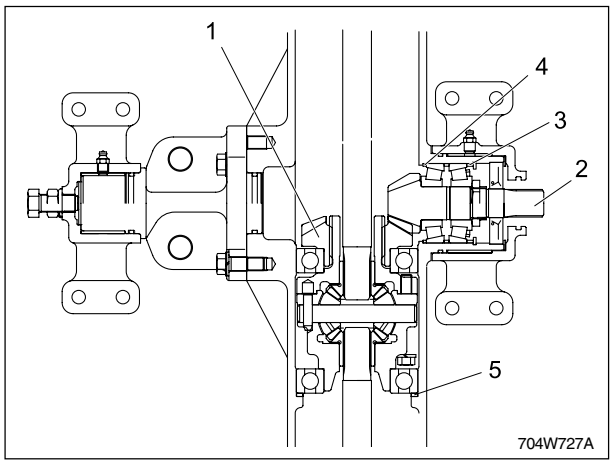

(1) Spiral Bevel Gear
(2) Spiral Bevel Pinion Shaft
(3) Adjusting Collar
(4) Adjusting Collar
(5) Shim

5.2.5 BACKLASH BETWEEN 11 BEVEL GEAR AND 16 BEVEL GEAR

1. Stick a strip of plastic gauge to three spots on the 16 bevel gear (1) with grease.
2. Fix the front axle case, bevel gear case and front gear case.
3. Turn the axle.
4. Remove the bevel gear case from front axle case and measure the thickness of the fuses with an outside micrometer.
5. If the backlash is not within the factory specifications, adjust with shim (3).

Item	Factory spec.
Backlash between 11 bevel gear and 16 bevel gear	0.15 ~ 0.35 mm 0.0059 ~ 0.0138 in.

(Reference)

- Thickness of adjusting shims (3):
  0.4 mm (0.0157 in.) 0.6 mm (0.0236 in.)
  0.8 mm (0.0315 in.) 1.0 mm (0.0394 in.)
  1.2 mm (0.0472 in.) 1.4 mm (0.0551 in.)
- Tooth contact: More than 35%

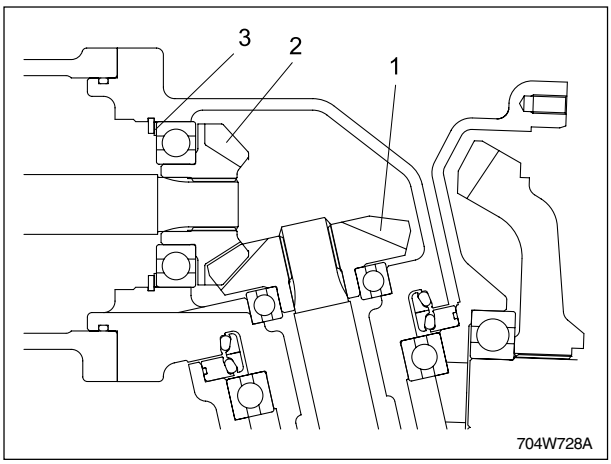

(1) 16 Bevel Gear (3) Shim
(2) 11 Bevel Gear

5.2.6 BACKLASH BETWEEN 11 BEVEL GEAR AND 42 BEVEL GEAR

1. Stick a strip of fuse to three spots on the 42 bevel gear (1) with grease.
2. Fix the axle flange and front gear case.
3. Turn the axle.
4. Remove the axle flange from front gear case and measure the thickness of the fuse with an outside micrometer.
5. If the backlash is not within the factory specifications, adjust with shim (3).

Item	Factory spec.
Backlash between 11 bevel gear and 42 bevel gear	0.15 ~ 0.35 mm 0.0059 ~ 0.0138 in.

(Reference)

- Thickness of adjusting shims (3):
  1.0 mm (0.039 in.) 1.8 mm (0.071 in.)
  1.2 mm (0.047 in.) 2.0 mm (0.079 in.)
  1.4 mm (0.055 in.) 2.2 mm (0.087 in.)
  1.6 mm (0.063 in.)
- Tooth contact : More than 35 %

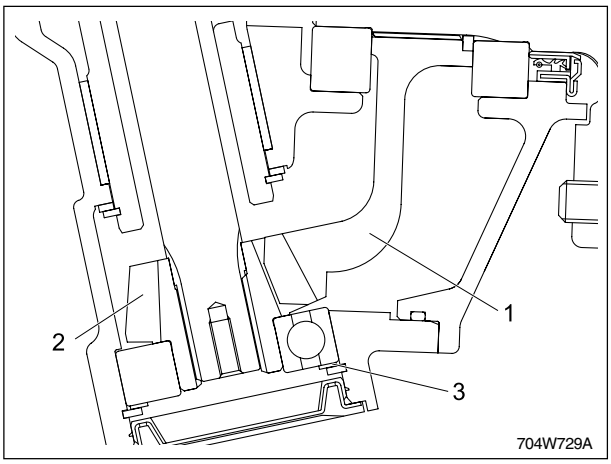

(1) 42 Bevel Gear (3) Shim
(2) 11 Bevel Gear

5.2.7 CLEARANCE BETWEEN FRONT AXLE CASE BOSSES AND BRACKET BUSHINGS

1. Measure the front axle case bosses O.D. with an outside micrometer.
2. Measure the bracket bushing I.D. with an inside micrometer and calculate the clearance.
3. If the clearance exceeds the allowable limit, replace the bracket bushing.
4. If the clearance still exceeds the allowable limit, replace the front axle case.

Item	Factory spec.	Allowable limit
Clearance between front axle case boss (front) and bracket bushing (front)	0.080 ~ 0.222 mm 0.00315 ~ 0.00874 in.	0.35 mm 0.0138 in.

Item	Factory spec.	Allowable limit
Front axle case boss (front) O.D.	49.975 ~ 50.000 mm 1.96752 ~ 1.96850 in.	-
Bracket bushing (front) I.D.	50.080 ~ 50.197 mm 1.97165 ~ 1.97626 in.	-

Item	Factory spec.	Allowable limit
Clearance between front axle case boss (rear) and bracket bushing (rear)	0.100 ~ 0.292 mm 0.00394 ~ 0.01150 in.	0.35 mm 0.0138 in.

Item	Factory spec.	Allowable limit
Front axle case boss (rear) O.D.	84.965 ~ 85.000 mm 3.34508 ~ 3.34646 in.	-
Bracket bushing (rear) I.D.	85.100 ~ 85.257 mm 3.35039 ~ 3.35657 in.	-

A. PRESS-FITTING BUSHING

- When press-fitting a new bushing, observe the dimension described in the figure.

Item	Factory spec.	Allowable limit
Press-fit depth of bushing (A)	14 mm 0.55118 in.	-
Press-fit depth of bushing (B)	14 mm 0.55118 in.	-

NOTE:

- *After replacing the bushing, be sure to adjust the front axle rocking force. (see page 8-9)*

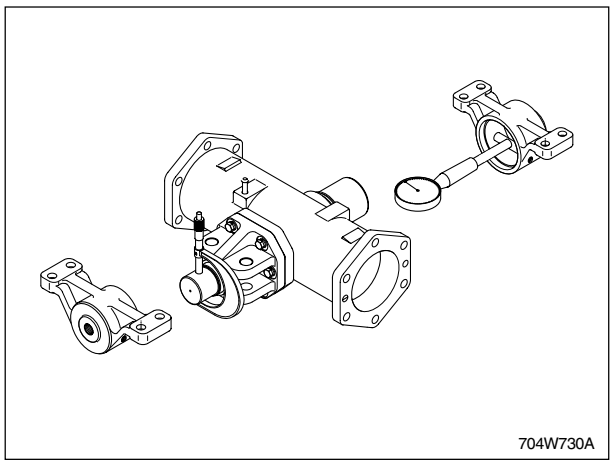

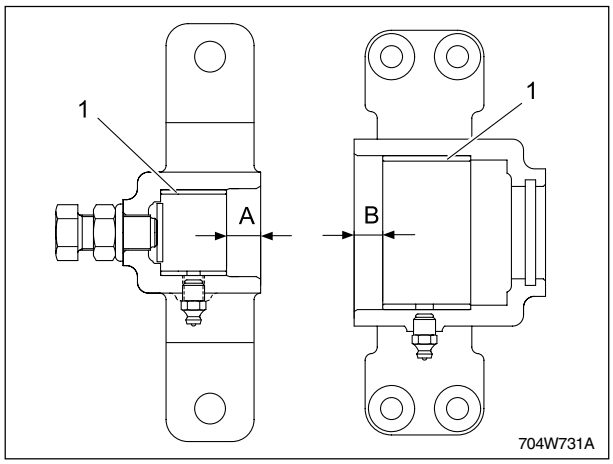

(1) Bushing

MEMO

CK25/27/30/35

STEERING SYSTEM

TABLE OF CONTENTS

1. SPECIFICATIONS 9-3

2. OPERATING PRINCIPLE 9-4

2.1 Hydraulic schematic 9-4

2.2 Hydraulic circuit diagram 9-5

2.3 Operation 9-6

2.3.1 In neutral 9-6

2.3.2 Turning to the right 9-6

2.3.3 Turning to the left 9-7

2.3.4 Manual steering 9-7

2.4 Operation of steering unit 9-8

2.4.1 Power to steering control motor 9-9

2.5 Structure of steering cylinder 9-10

2.6 Hydraulic pump 9-11

3. TROUBLESHOOTING 9-12

4. SERVICING 9-13

4.1 Disassembling the hydraulic pump .. 9-13

4.1.1 Bonnet removal 9-13

4.1.2 Hydraulic pump removal 9-13

4.1.3 Disassembling the hydraulic pump 9-14

4.2 Disassembling the power steering unit 9-15

4.2.1 Instrument panel 9-15

4.2.2 Removeing the power steering unit 9-15

4.2.3 Disassembling the power steering unit after disassembly 9-16

4.2.4 Inspection 9-19

4.2.5 Assembly 9-19

4.3 Steering cylinder removal 9-25

4.3.1 Disassembling, assembling and servicing 9-25

4.4 Steering wheel 9-26

4.4.1 Steering wheel clearance 9-26

4.4.2 Steering wheel operating force 9-26

4.5 Steering pressure 9-27

4.5.1 Steering relief opening pressure test 9-27

4.5.2 Relief pressure adjustment 9-27

1. SPECIFICATIONS

Item		Reference Value
Hydraulic pump (for steering)	Type	Gear
	Pump capacity	16.7 ℓ /min 4.4 GPM
	Pump gear ratio	1/1
Power steering unit	Power steering unit volume	51 cc/rev
	Relief pressure	125 kgf/cm^2 12.3 MPa
Steering cylinder	Tube O.D	50.8 mm 2.0 in.
	Tube I.D	43.8 mm 1.72 in.
	Rod O.D	35 mm 1.38 in.
	Stroke	185 mm 7.28in.
Steering wheel	Operation force condition: (Engine speed approx. 2,800 rpm)	Less than 0.6 kgf 5.9 N 1.3 lbs.

2. OPERATING PRINCIPLE

2.1 HYDRAULIC SCHEMATIC

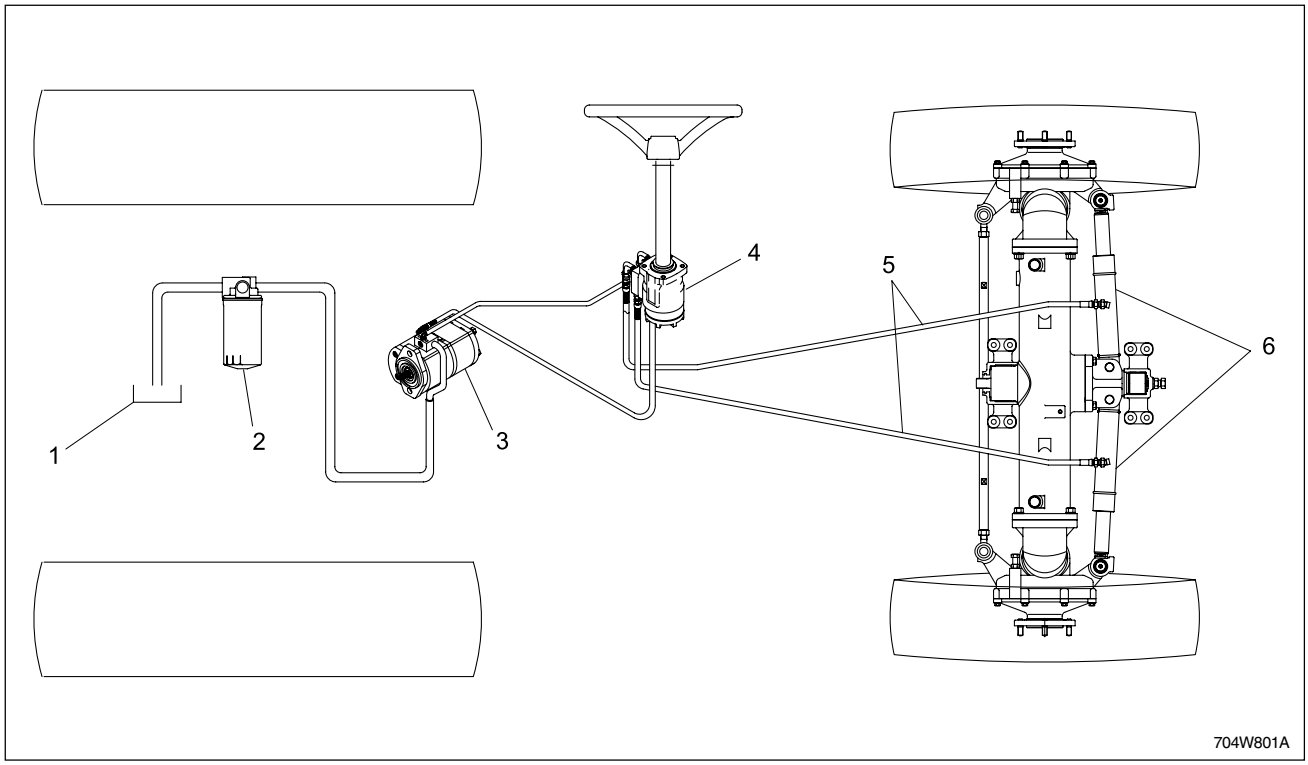

(1) Oil Tank (Transmission Case)
(2) Oil Filter
(3) Gear Pump
(4) Steering Unit
(5) Steering Hose
(6) Steering Cylinder

The steering system is hydrostatic. It includes a power steering motor, hydraulic relief ass'y, and a steering cylinder. Reference the figure. This system is optimally designed for a high front wheel steering angle and a small turning radius.

The steering power of the steering wheel is transmitted to the front wheel through the power steering motor, hydraulic hoses, and steering cylinder. Hydraulic power, supplied from the hydraulic relief ass'y, makes steering easy. If hydraulic power isn't supplied from the hydraulic relief ass'y, the steering motor will manually actuate the internal trochoid pump.

The power steering motor has a relief valve for protecting the hydraulic circuit. If the steering wheel is continuously rotated, when the front wheel reaches the maximum steering angle, or resistance of traveling wheel is too large, the relief valve is actuated.

Continuing to activate the relief valve will cause the oil temperature to cause possible malfunction of the relief valve. This will seriously affect all steering parts.

2.2 HYDRAULIC CIRCUIT DIAGRAM

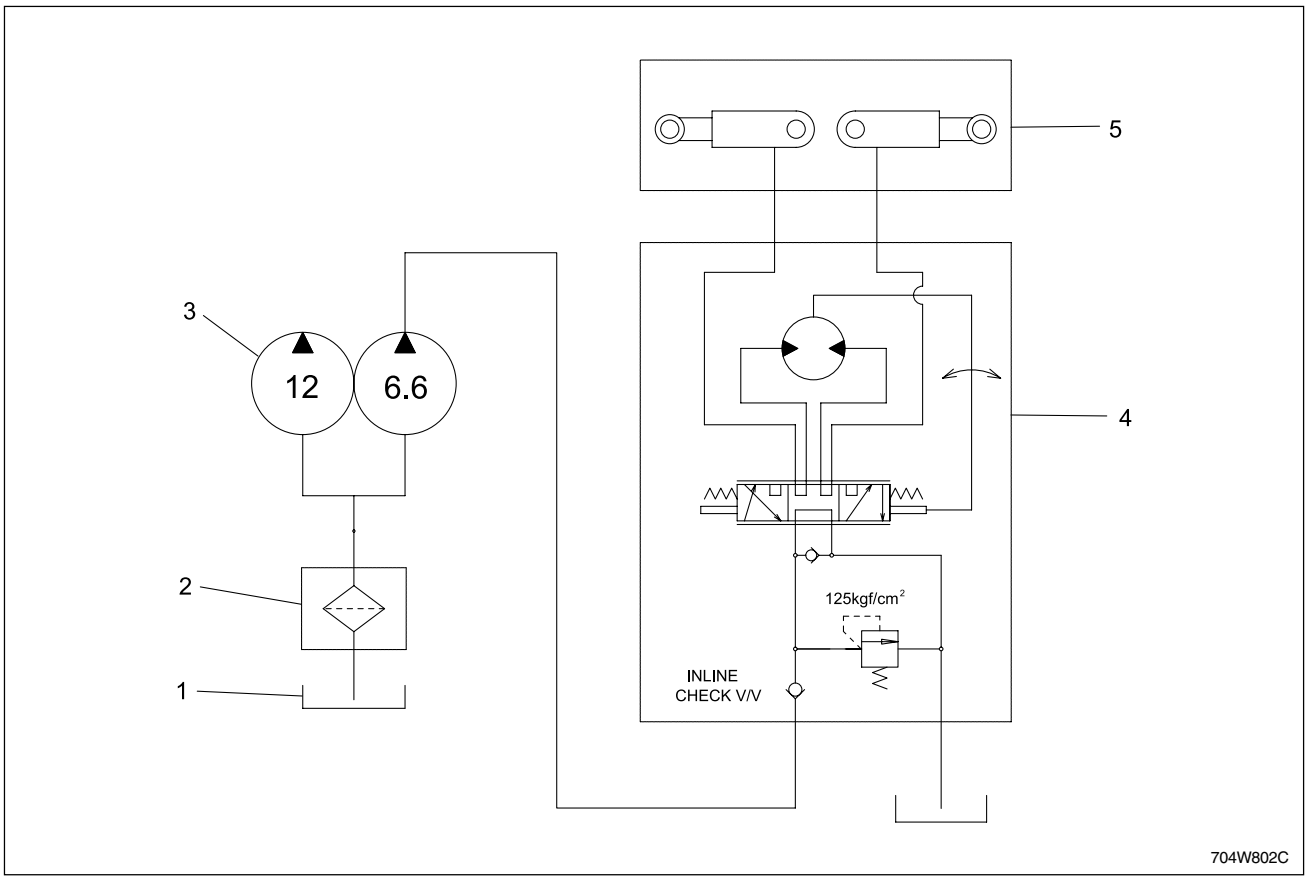

(1) Oil Tank (Transmission Case)
(2) Oil Filter
(3) Gear Pump
(5) Steering Unit
(6) Steering Cylinder

- The hydraulic pump, driven by the engine, will pass the transmission case oil through a valve to the power steering unit.
- When the steering wheel control is activated, oil is passed through the Gerotor to steering cylinder. The steering cylinder moves the steering rod, which controls the steering of the front wheels.
- Oil that is returned from the steering cylinder, returns to the oil tank (transmission case) via the power steering unit.

2.3 OPERATION

2.3.1 IN NEUTRAL

If the steering wheel is not rotated, the control valve (3) stays in neutral because of the centering spring (4).

Oil flow is formed between port p (from pump) of the control valve and port T of the transmission case. All oil that is supplied from the gear pump will be drained to this port.

Flow from cylinder port R and L will be shut off at the control valve.

The Steering cylinder will not move, and this keeps the front wheel straight or at the given angle without motion.

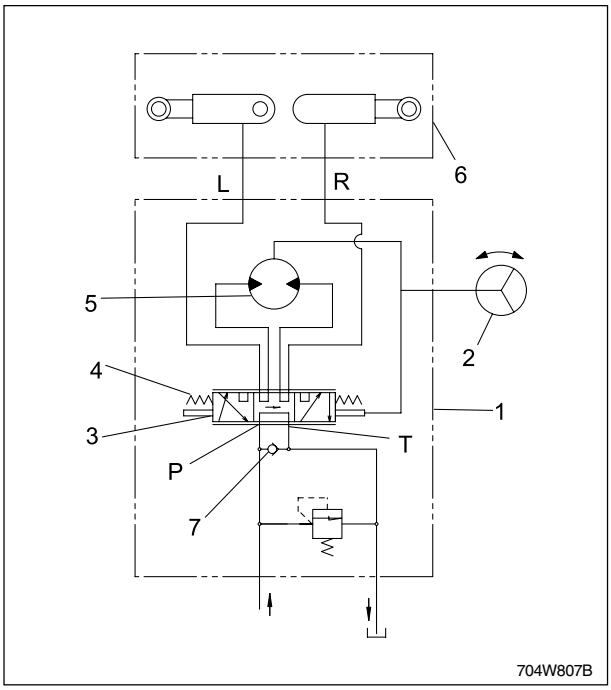

(1) Steering Controller
(2) Steering Wheel
(3) Control Valve
(4) Centering Spring
(5) Gerotor
(6) Steering Cylinder
(7) Check Valve

2.3.2 TURNING TO THE RIGHT

When the steering wheel is rotated to the right, the movement is passed to the control valve through the drive plate, Gerotor, and drive link.

The control valve (3) rotates to the right on the manifold and is located on the opposite direction of the control valve (3) Port P. The flow of the control valve is connected to the Gerotor (5). The stator rotates, passing oil as the steering wheel moves.

Oil passed through the Gerotor (5) will flow to the rear of the control valve, through cylinder port R and will move the steering cylinder (6).

The Front wheel moves as the oil passes through the steering cylinder (6). It goes on to the control valve and returns to the transmission case.

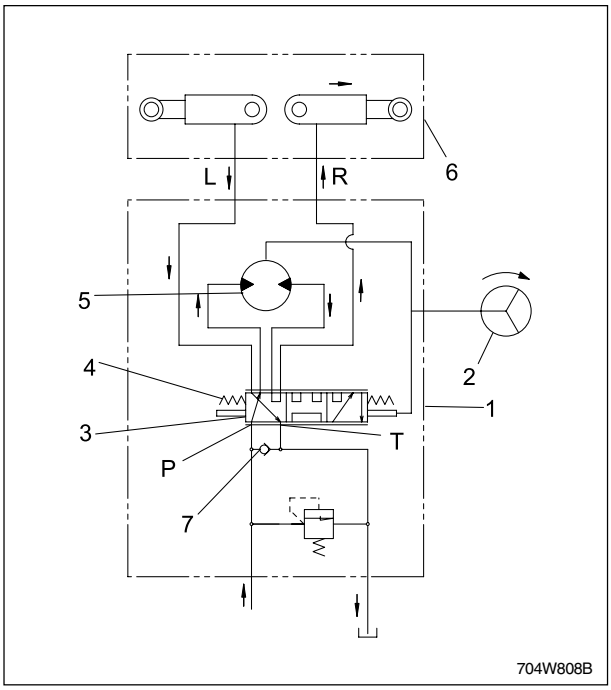

(1) Steering Controller
(2) Steering Wheel
(3) Control Valve
(4) Centering Spring
(5) Gerotor
(6) Steering Cylinder
(7) Check Valve

2.3.3 TURNING TO THE LEFT

The steering system operates the same when rotating to the left as it does to the right, except for the flow in and out.

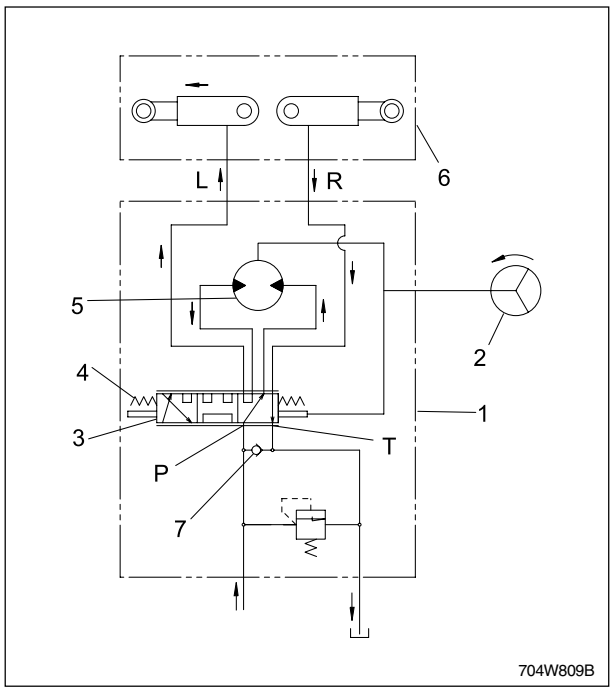

(1) Steering Controller
(2) Steering Wheel
(3) Valve Plate
(4) Centering Spring
(5) Gerotor
(6) Steering Cylinder
(7) Check Valve

2.3.4 MANUAL STEERING

In case of manual steering due to engine stop or hydraulic pump failure, the Gerotor operates as a manual trochoid pump.

When controlling steering wheel, the rotor inside of the Gerotor will be driven. Oil will flow through the check valve 2 installed in the housing from the oil tank to port P. It operates the cylinder by adding oil to the same passage as the power steering control does.

2.4 OPERATION OF STEERING UNIT

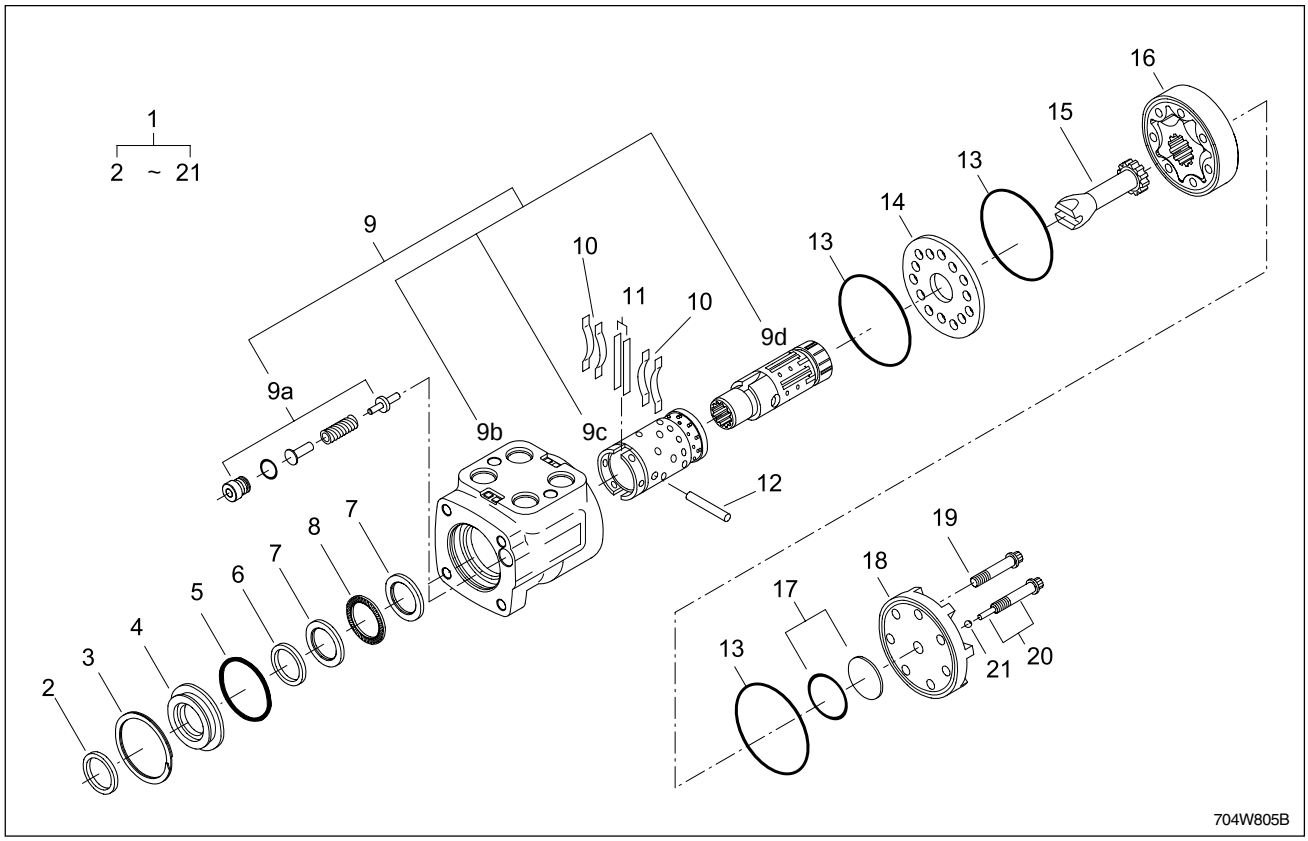

(1) Steering Unit
(2) Dust Seal
(3) Retaining Ring
(4) Seal Gland Busing
(5) O-ring
(6) Oil Seal
(7) Race Bearing
(8) Thrust Needle Bearing
(9) Control Valve Assembly
(9a) Relief Valve
(9b) Steering Unit Hosing
(9c) Sleeve
(9d) Spool
(10) Centering Spring
(11) Flat Spring
(13) O-ring
(14) Spacer Plate
(15) Drive (Shaft)
(16) Gerotor
(17) Star Seal Assembly
(18) End Cap
(19) Bolt
(20) Retainer Screw Assembly
(21) Ball

▶ POWER STEERING UNIT SPEC.

Item	Factory spec.
Power steering unit volume	51 cc/rev
Relief pressure	125 kgf/cm^2
Type	Open conter, Load reaction

2.4.1 POWER STEERING CONTROL MOTOR

A. SPOOL AND SLEEVE

1. The spool (9d) and sleeve (9c) consists of the rotary valve to selectively switch the fluid passage as well as the direction of the fluid flow.

   There are three types of fluid passage; Neutral, Right turn, and Left turn.

2. The spool is fitted to be rotatable in the sleeve, which is fitted into the bore of the valve body.

   The spool and the sleeve are mechanically interconnected.

3. The springs (10), (11) are installed through the spool (9d) and sleeve (9c) to maintain the connected state of the spool and the sleeve.

   This position corresponds to the neutral state, and is kept as long as the steering wheel is not turned.

4. The pin is fitted to the drive shaft (15) and the sleeve (9c), there being some clearance between the pin and the holes on the spool.

   Therefore, when the shaft and sleeve rotate, the spool rotates with approx. 10° of clearance. At this moment, a fluid passage is formed between the spool and the sleeve to operate the steering system. When the shaft and sleeve stop rotating, the spool and sleeve return to their original positions by the spring. Then, the fluid passage is closed and the return passage is open.

B. DRIVE SHAFT

The pump drive shaft (15) is slightly tilted off the spool axis, and is splined to the pump gear of the GEROTOR pump assembly by its bottom end.

In the event of loss of fluid pressure, turning the steering wheel drives the GEROTOR through this shaft to operate the steering manually.

C. GEROTOR PUMP

The gerotor pump provides the steering system with a back-up device for steering, and operates as previously described.

D. CHECK VALVE

The check valve normally remains closed, which prevents the fluid from flowing from its inlet side to its outlet side directly. When the steering system is manually operated, this valve forms the fluid passage so that the fluid returned from the steering cylinder flows to the GEROTOR pump for recirculation.

E. RELIEF VALVE

The relief valve (9a) prevents excessive hydraulic pressure from building up in steering pump and circuit. In other words, it protects the circuit when the steering cylinder stroke is completed or the steering is not possible due to the outer force.

2.5 STRUCTURE OF STEERING CYLINDER

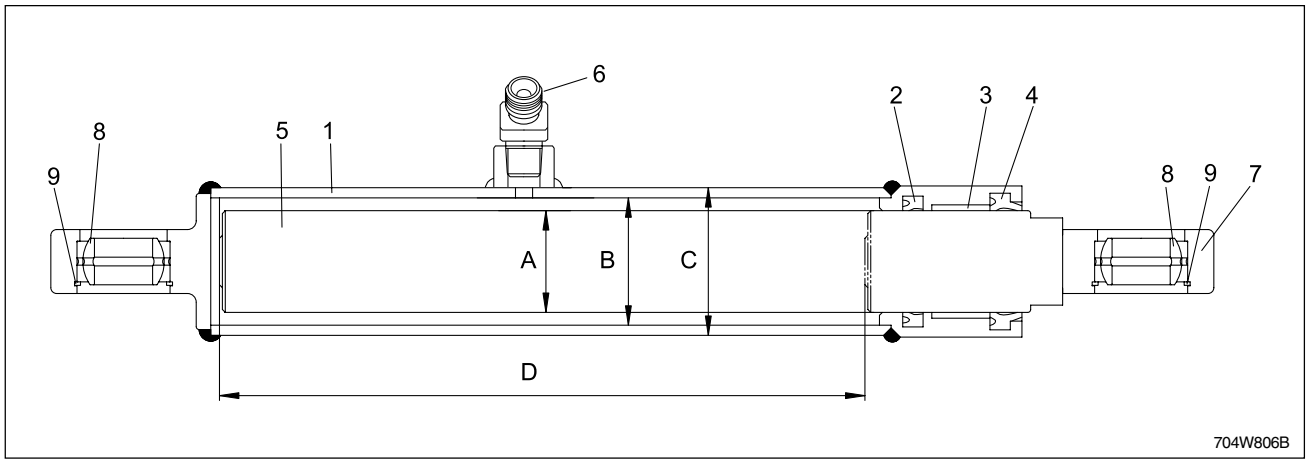

(1) Tube
(2) Packing
(3) Bush
(4) Dust Seal
(5) Rod
(6) Elbow
(7) Rodend
(8) Bearing
(9) Snap Ring
(A) Rod O.D
(B) Tube I.D
(C) Tube O.D
(D) Stroke

A. MAJOR SPECIFICATION

Tube O.D.	Tube I.D.	Rod O.D.	Stroke
ϕ 50.8 mm (2.0 in.)	ϕ 43.8 mm (1.72 in.)	ϕ 35 mm (1.38 in.)	185 mm (7.28 in.)

2.6 HYDRAULIC PUMP

A. LOCATION AND STRUCTURE OF GEAR PUMP

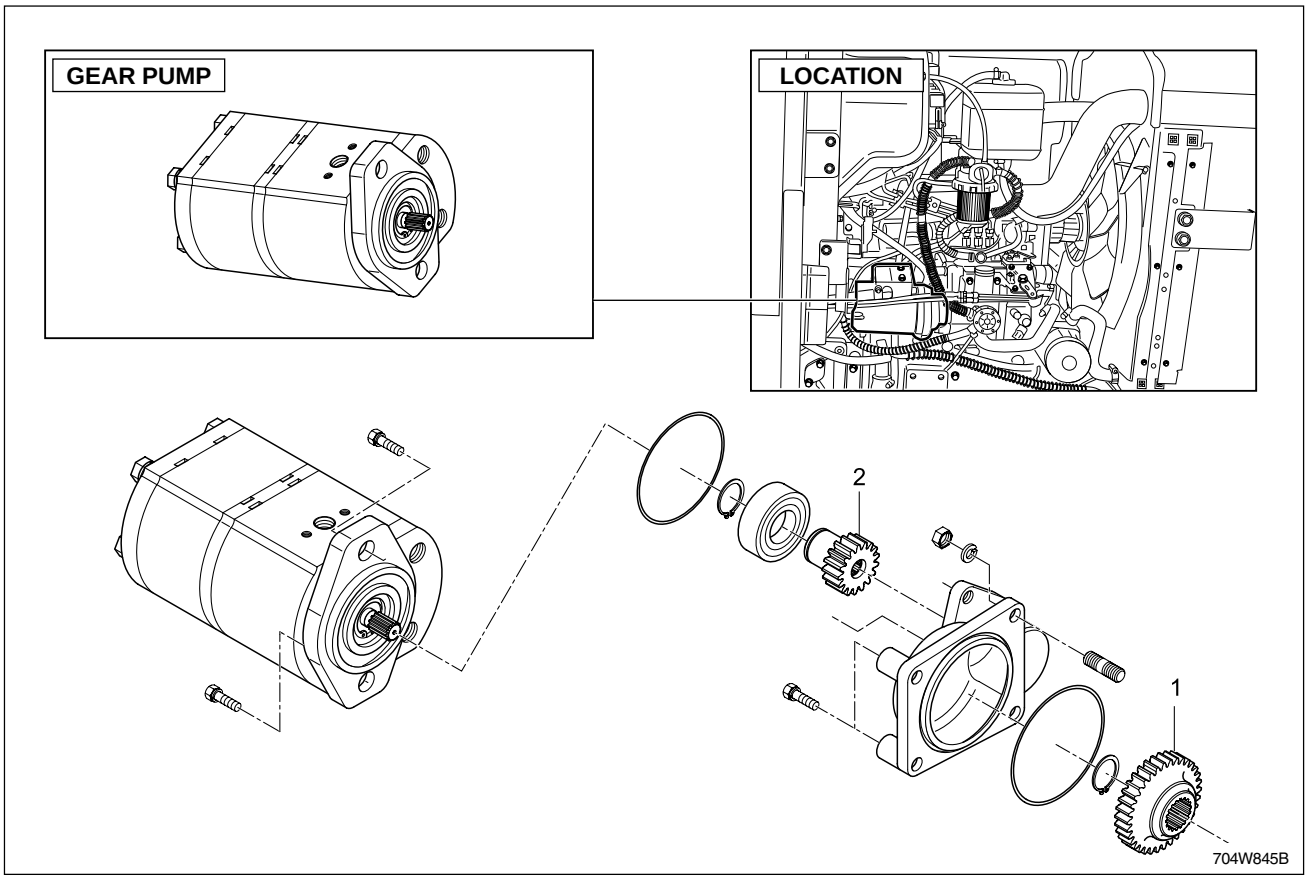

The hydraulic pump is driven by the fuel camshaft in the engine.

The fuel camshaft rotates at one half of the engine speed. The pump speed is doubled by the 34 gear (1) and the 17 gear (2), so the pump rpm is the same as the engine rpm.

The gear pump is divided into two parts. This is often called as the tandem pump.

The first pump, which is close to the input shaft, supplies the joystick valve, auxiliary double acting valve and hydraulic lifting cylinder with fluid. The second pump supplies the PTO clutch, 4WD shift system and steering unit with fluid through the modulator valve.

For the tractor with HST, the pump supplies the HST input shaft next to the steering unit with the hydraulic fluid.

B. HYDRAULIC PUMP SPECIFICATIONS

Specifications for hydraulic pump (tandem gear pump)		
Displacement	Pump 1	12 cc/rev
	Pump 2	6.6 cc/rev
Max. maintaining pressure	Pump 1	255 kgf/cm²
	Pump 2	255 kgf/cm²
Speed range		600 ~ 3,500 rpm
Operating oil temperature		-25°C ~ 80°C

Engine rated rpm: 2,600 rpm

Speed ratio of engine and gear pump: 1 : 1

3. TROUBLESHOOTING

Symptom	Provable Causes	Solution
Excessive steering wheel play	• Steering linkage worn	Replace
	• Centering spring weaken or broken	Replace
Tractor pulls to right or left	• Tire pressure uneven	Adjust
	• Steering wheel play too small	Adjust
	• Improper toe-in adjustment	Adjust
	• Front wheel hub ball bearing worn or damaged	Replace
	• Brake pedal play unevenly adjusted	Adjust
Front wheels vibration	• Steering linkage worn	Replace
	• Improper toe-in adjustment	Adjust
	• Knuckle shaft bushing worn [2wd]	Replace
	• Clearance between center pin and bushing	Replace
Hard steering	• Transmission fluid improper or insufficient	Change
	• Oil leak from pipe joint	Retighten
	• Hydraulic pump malfunctioning	Replace
	• Relief valve malfunctioning	Adjust or replace
	• Seals in the steering gear box damaged	Replace
	• Backlash between sector gear shaft and ball nut too small	Adjust
	• Air in the hydraulic pipes	Air Vent
	• Low operating pressure	Refer to next item
Low operating pressure	• Hydraulic pump malfunctioning	Replace
	• Improper relief valve adjustment	Adjust
	• Control valve malfunctioning	Replace
	• Seals in the steering gear box damaged.	Replace
	• Ball nut malfunctioning	Replace ball nut assembly
	• Oil leak from pipe or pipe broken	Replace
Steering wheel does not return to neutral position	• Control valve malfunctioning	Replace
	• Valve spool and valve housing jammed	Repair or replace
	• Valve housing oil seal damaged	Replace
	• Centering spring weaken or broken	Replace
Steering force fluctuates	• Insufficient oil	Replenish
	• Insufficient bleeding	Bleed
	• Control valve malfunctioning	Replace
Noise	• Insufficient oil	Replenish
	• Air sucked in pump from suction circuit	Repair
	• Pipe deformed	Replace

4. SERVICING

4.1 DISASSEMBLING THE HYDRAULIC PUMP

4.1.1 BONNET REMOVAL

1. Open the bonnet (1).
2. Remove the side cover (RH) (2).
3. Disconnect the battery terminal (-) (3).

(For assembly)

When connect the battery terminal (-), apply a little grease to it.

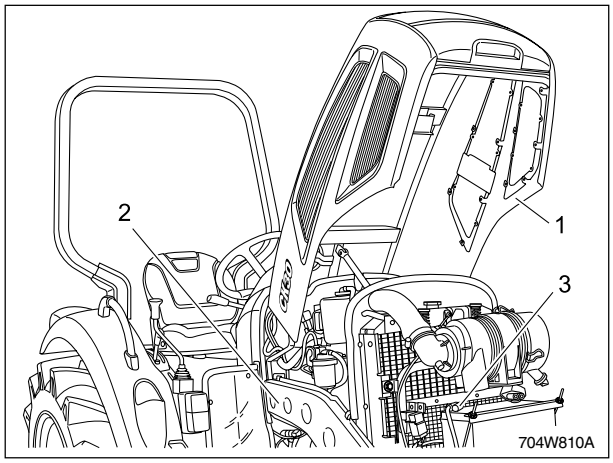

(1) Bonnet
(2) Side Cover
(3) Battery Terminal (-)

4.1.2 HYDRAULIC PUMP REMOVAL

1. Remove the hoses assembly (P) (1), hose band (2) and hose assembly (T) (3).
2. Remove the joint bolt (4), bolts and O-rings.
3. Remove the bolts (5), hose band (6), suction tube 3 (7) and O-ring.
4. Remove the bolts, Hydaulic tube (8) and O-ring.
5. Remove the bolts and pump (9).

(When reassembling)

Item	Tightening torque
Joint bolt	44.1 Nm 4.5 kgf-m 32.5 lb-ft

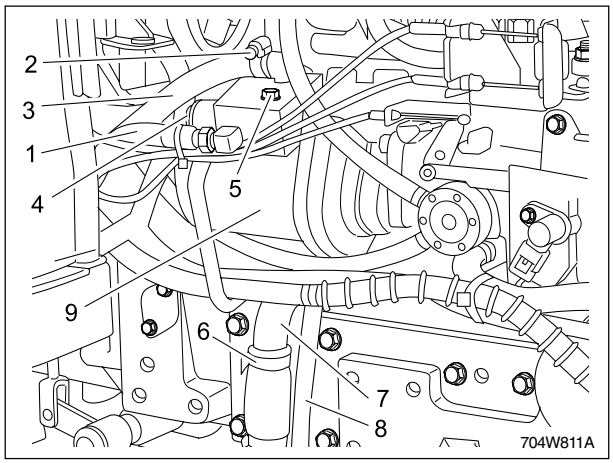

(1) Steering Hose Assembly (P)
(2) Hose Band
(3) Steering Hose Assembly (T)
(4) Joint Bolt
(5) Bolt
(6) Pipe Bands
(7) Suction Tube 3
(8) Hydaulic Tube
(9) Pump

4.1.3 DISASSEMBLING THE HYDRAULIC PUMP

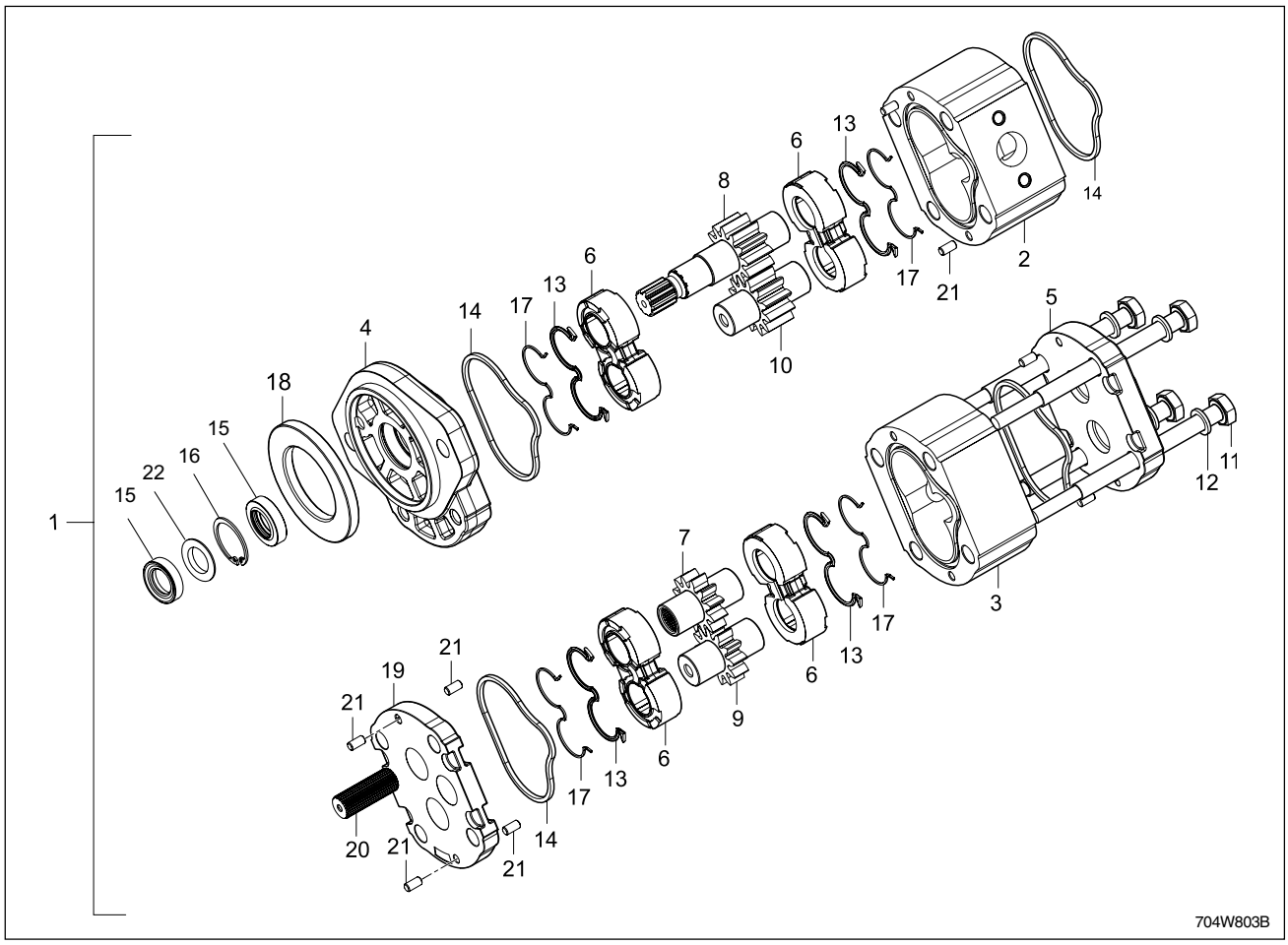

(1) Gear Pump Assembly
(2) Body
(3) Body
(4) Front Cover
(5) Rear Cover
(6) Bushing
(7) Driving Gear shaft 2
(8) Driving Gear Shaft 1
(9) Driving Gear
(10) Driving Gear
(11) Bolt
(12) Washer
(13) Seal
(14) Seal
(15) Shaft Seal
(16) Snap Ring
(17) Backup Ring
(18) Ring
(19) Flange
(20) Connecting Shaft
(21) Pin
(22) Backup Washer

1. Secure the gear pump assembly in a vise.
2. Loosen 4 bolts (11) and remove the rear cover (5).
3. Remove the snap ring (16), oil seal (15) and backup washer (22) from the drive shaft.
4. Loosen second pump body (3) and remove bushing (6), seal (13), backup ring (17), seal (14), drive gear shaft 2 (7) and driving gear (9).
5. Loosen flange (19) and connecting shaft (20).
6. Loosen first pump body (2) and remove bushing (6), seal (13), backup ring (17), seal (14), drive gear shaft 1 (8) and driving gear (10).
7. Remove the oil seal attached to front cover (4).

Item	Tightening torque
Bolt(11)	45 Nm 4.6 kgf-m 33.2 lbf-ft

CAUTION

- ***If the oil seal has been cracked or aged, replace it with a new one when assembling.***
- ***Be careful not to cause damages on the sealing. If damaged, replace it with a new one.***
- ***Pay attention to the assembling direction of the sealing when assembling.***

4.2 DISASSEMBLING THE POWER STEERING UNIT

4.2.1 INSTRUMENT PANEL

1. Remove the instrument panel cover (down) and remove the mounting bolts.
2. Remove the bolt and disconnect the wiring connectors for hazard, head light, key switch with instrument cover (upper).

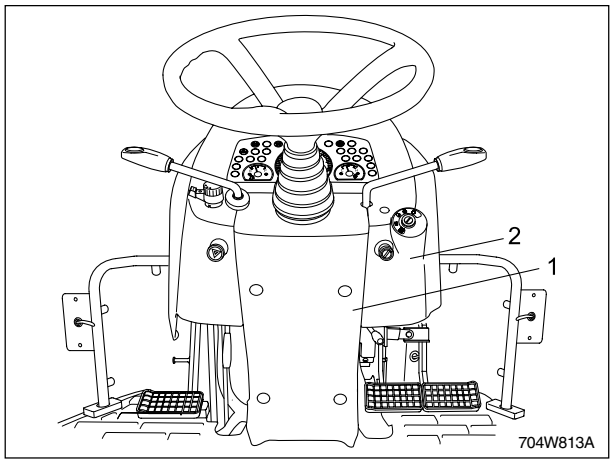

(1) Instrument Panel Cover (down)
(2) Instrument Panel Cover (upper)

4.2.2 REMOVING THE POWER STEERING UNIT

1. Disconnect the steering hose assembly (L.R.T.P).
2. Remove the mounting bolts and remove the power steering unit.

(When reassembling)

- Apply grease to the spline shaft.
- A hose classification
  - Steering hose P : A red tag attachment
  - Steering hose R : A white tag attachment
  - Steering hose L : A yellow tag attachment
  - Steering hose T : No tag
- Install the power steering motor by holding the power steering motor up under the steering shaft while turning the steering wheel slightly to engage the splines of the steering shaft and motor. Push the power steering motor up completely onto the splines of the steering shaft. While holding upward on the power steering motor install the 3 bolts with lock washer and tighten.

Item	Tightening torque
Steering hose P, R, L	29.4 ~ 34.4 Nm 3.0 ~ 3.5 kgf-m 21.7 ~ 25.3 lb-ft
Pipe band	4.9 ~ 9.8 Nm 0.5 ~ 1.0 kgf-m 3.6 ~ 7.2 lb-ft
Power steering unit mounting bolts	34 ~ 44 Nm 3.5 ~ 4.5 kgf-m 25.3 ~ 32.5 lb-ft

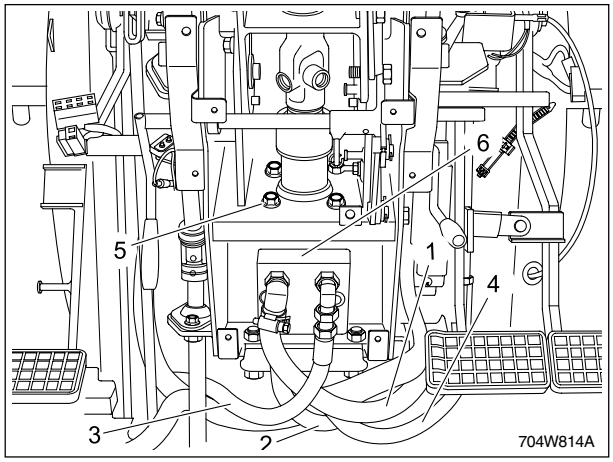

(1) Steering Hose Ass'y (T)
(2) Steering Hose Ass'y (P)
(3) Steering Hose Ass'y (L)
(4) Steering Hose Ass'y (R)
(5) Bolt
(6) Power Steering Unit Ass'y

4.2.3 DISASSEMBLING THE POWER STEERING UNIT AFTER DISASSEMBLY

1. Place the control motor (2), upside down in a vise. Use soft-faced jaws and tighten the vise just enough to hold the motor. Otherwise, the pressure could jam components against one another.
2. Remove the seven bolts from the end cap (3), and remove the end cap and O-ring.

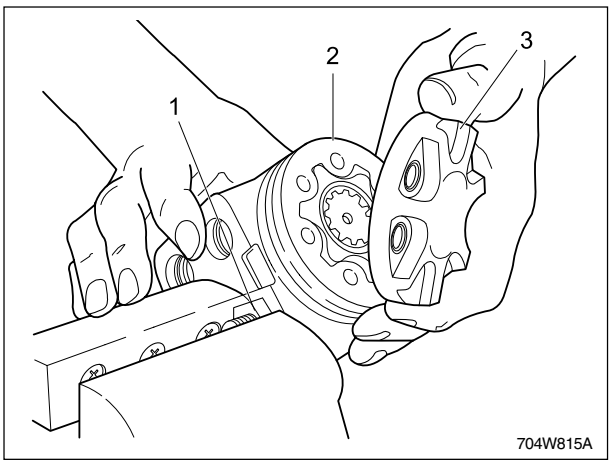

(1) Fitting
(2) Control Motor
(3) End Cap

3. Slide the GEROTOR motor (rotor (4) and stator (2)) from the spacer plate (5). Remove the large O-ring which fits between the stator (2) and spacer plate and the smaller O-ring and seal ring (1), which fits between the rotor (4) and cap.

NOTE:

- *The inner rotor separates easily from the outer pump body rotor. Use care in handling being careful not to drop or otherwise damage these components.*

4. Lift the drive shaft (3) and spacer plate (5) from the housing. Remove the O-ring from beneath the spacer plate.

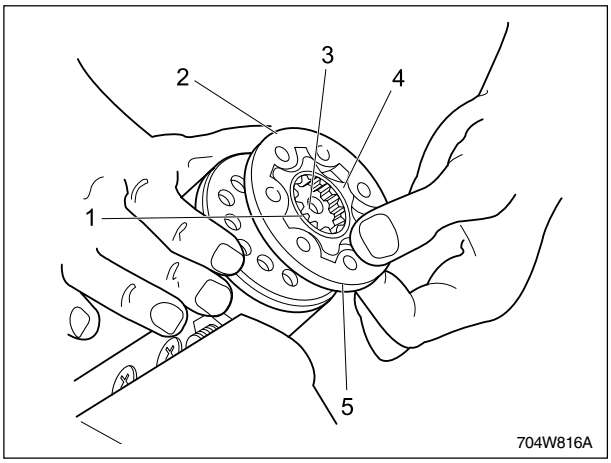

(1) Seal Ring
(2) Stator
(3) Drive Shaft
(4) Rotor
(5) Spacer Plate

5. Remove the steering motor from the vise and remove the check valve ball (1), from the housing.

NOTE:

- *The check ball is located in the deepest bolt hole (2).*

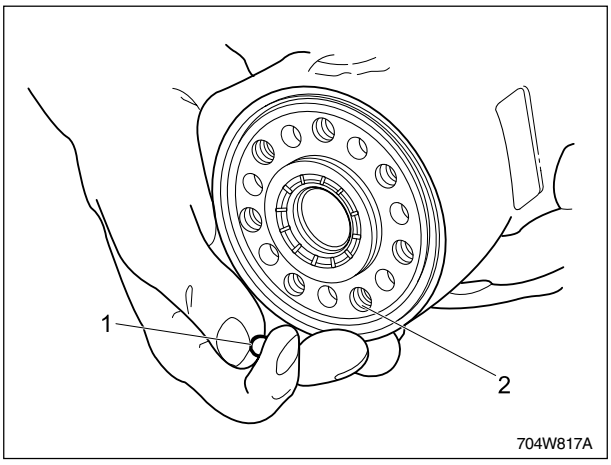

(1) Check Valve Ball
(2) Deepest Bolt Hole

6. Using a screwdriver, remove the retaining ring (2), from the upper end of the steering housing (3). Then remove the gland bushing (1).

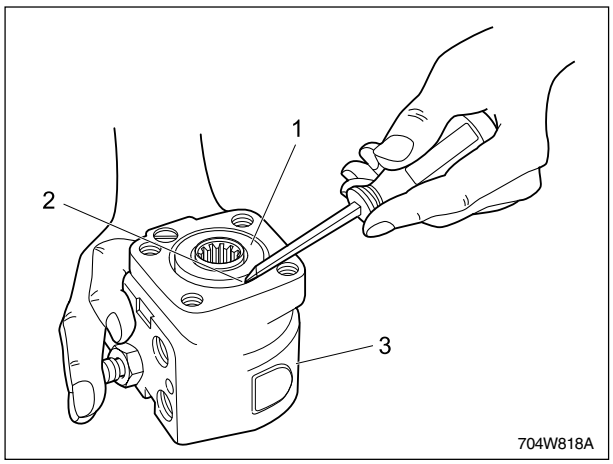

(1) Gland Bushing (3) Steering Housing
(2) Retaining Ring

7. Remove the oil seal, dust seal and O-ring seal from the gland.

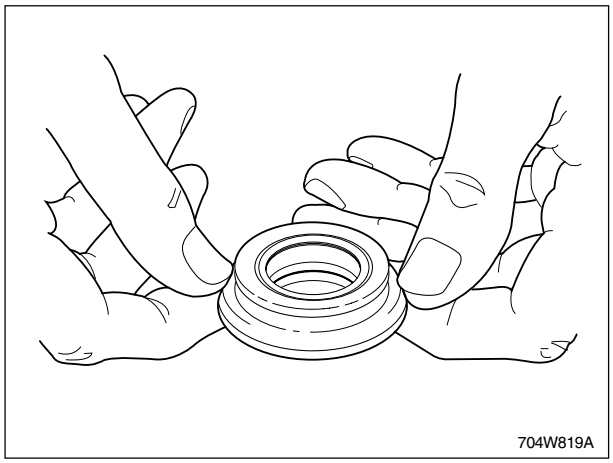

8. Remove the thrust bearing (2) and two bearing races (1) from the body.

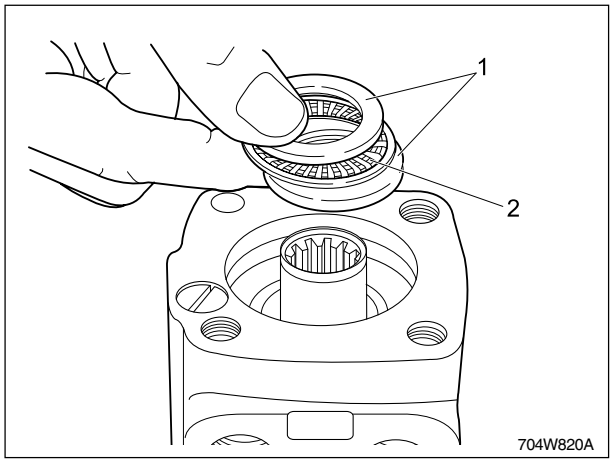

(1) Two Bearing Race (2) Thrust Bearing

9. Pull the sleeve and spool (2) from the bottom of the motor housing (1). The sleeve is a close fit in the steering motor housing and should be rotated slightly during removal. While rotating the sleeve and spool out of the housing keep the pin, which runs through the components, as horizontal as possible to the bench. This helps prevent the pin from sliding out of its hole and catching on the lands in the housing. Pull the sleeve out as straight as possible to prevent it from becoming jammed.

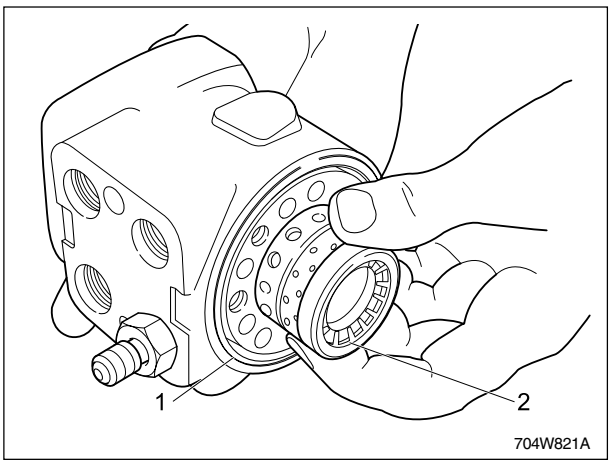

(1) Motor Housing (2) Sleeve

10. Remove the pin (3) from the sleeve (1) and spool (2) assembly.

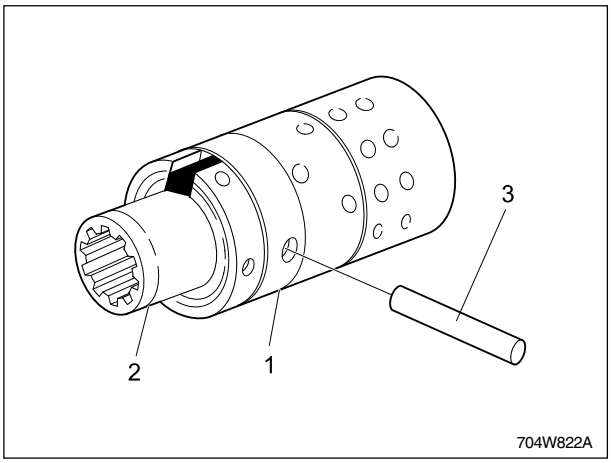

(1) Sleeve (3) Pin
(2) Spool

11. Push the spool upward out of the sleeve slightly and pull the centering springs (1) outward. Then remove the spool from the bottom side of the sleeve.

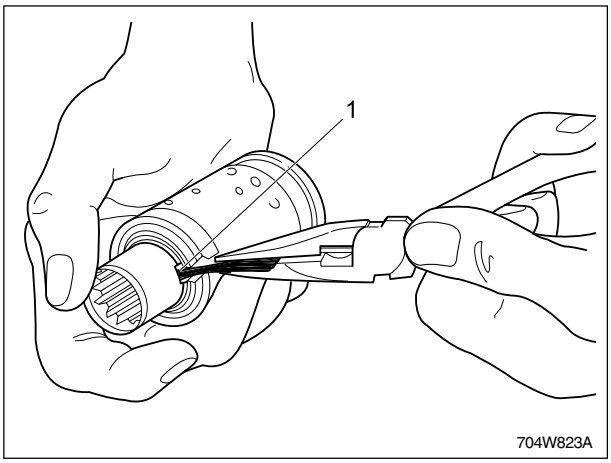

(1) Centering Springs

4.2.4 INSPECTION

1. Inspect the spool and sleeve for evidence of sticking, scuff marks, and any other damage. If found defective, replace the spool and sleeve as a matched marked set.
2. Check the pin to make sure it is not bent or cracked and check the internal teeth on the spool for damage.
3. Inspect the inside surfaces of the motor housing for wear or damage.
4. Inspect the GEROTOR pump stator and rotor for wear. Make certain the rotor turns within the stator.
5. Inspect the drive shaft for wear or damage.
6. Inspect the thrust bearing for wear or damage.
7. Inspect the centering springs for distortion. Centering springs which have lost their tension should be replaced.

4.2.5 ASSEMBLY

1. Slide the spool into the sleeve. Position the spool so that the centering spring slots on the spool and sleeve line up, in order for the centering springs to be installed.

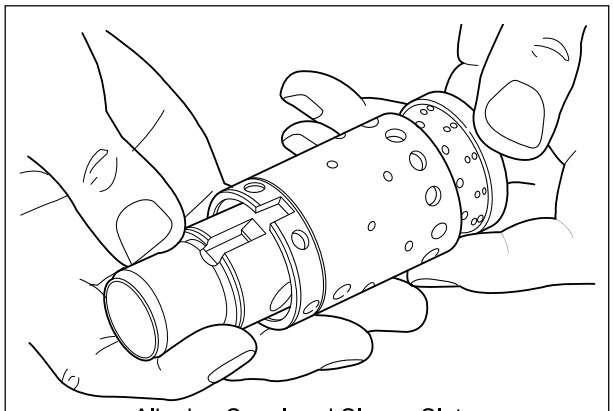

Aligning Spool and Sleeve Slots

2. With the centering spring slots lined-up, insert the special tool (1) in the slots.
3. Assemble the centering springs (2), with the two flat springs in the middle and two curved springs on each side with the convexed side facing the flat springs. Make sure the notched edges of the springs face downward. Then position the assembly into the notched groove of the installation tool.
4. While griping the outer edge of the centering spring assembly and maintaining pressure against the tool, slide the tool out of the assembly leaving the springs positioned in the slots.

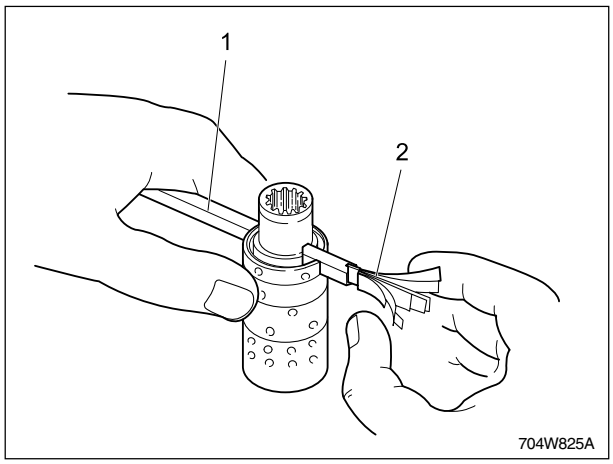

(1) Special Tool (2) Centering Springs

5. Position the spool and sleeve so that their ends are flush and insert the pin (1) through the assembly until its ends are below the surfaces of the sleeve.

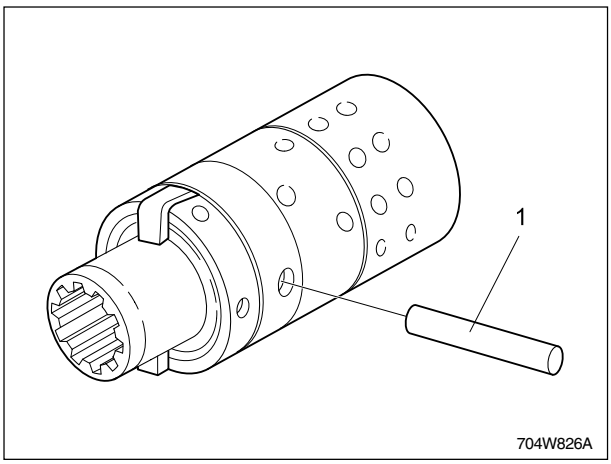

(1) Pin

6. Orient the spool and sleeve (2), so that the pin is horizontal to the bench and carefully insert the assembly into the bottom of the steering motor housing (1). Rotate the assembly slightly while inserting it to ease installation.
   Position the spool and sleeve so that their ends are flush with the bottom of the steering motor housing and make sure that the assembly can turn freely within the housing.

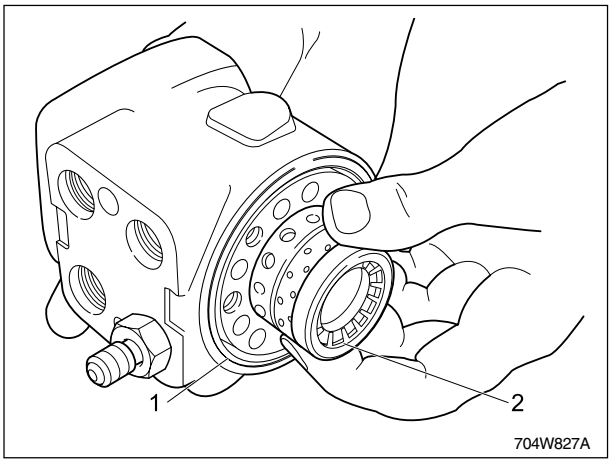

(1) Steering Motor Housing
(2) Sleeve

7. Insert a thrust bearing race (1), the thrust bearing (2), then the other thrust bearing race (1), into place making sure it seats firmly on the sleeve and spool.

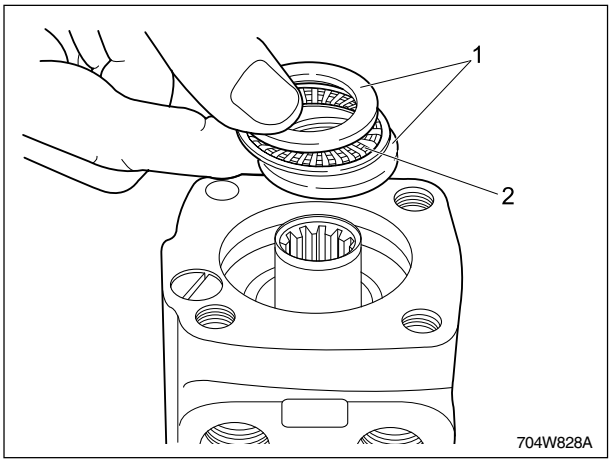

(1) Thrust Bearing Race (2) Thrust Bearing

8. Install a new O-ring, dust seal, and oil seal in the gland bushing, insert the bushing into the housing while rotating it.
9. Install the retaining ring in the housing groove.

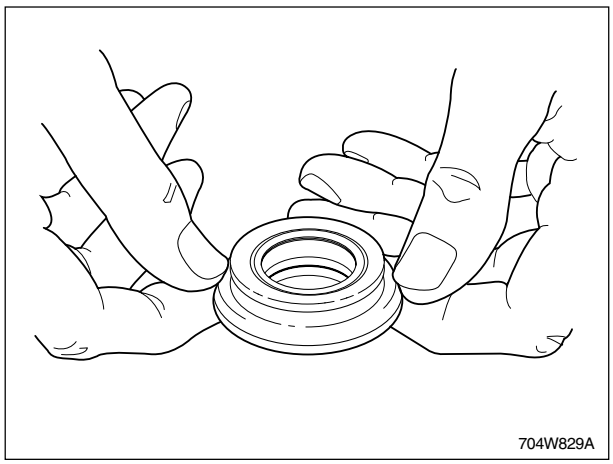

10. Position the steering motor housing in a vise with the bottom end facing up. To avoid damaging the steering motor housing, use soft-faced jaw and light pressure or a fitting installed in one of the ports to grip the steering motor.
11. Position the spool and sleeve assembly slightly below the bottom face of the motor housing, then install the check valve ball (1) into its retainer bolt hole (2).

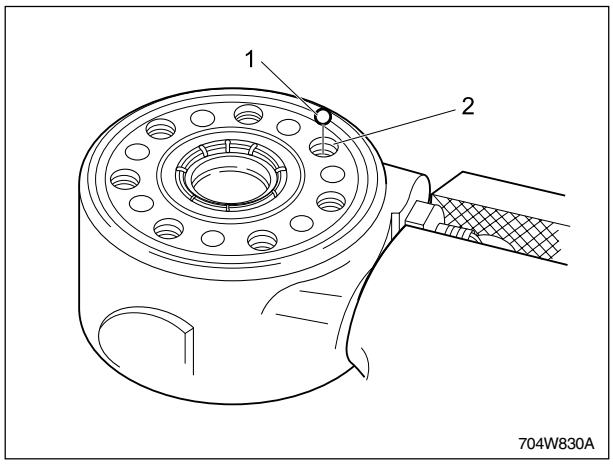

(1) Check Valve Ball (2) Retainer Bolt Hole

12. Install a new O-ring (1), in the housing. Position the spacer plate (2) on the O-ring so that the holes line up with those in the housing.

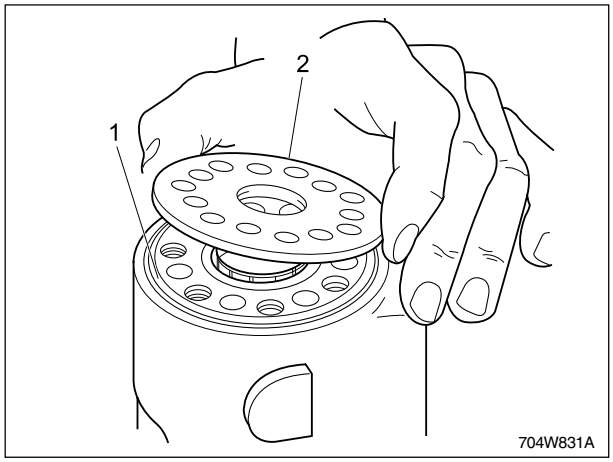

(1) O-ring (2) Spacer Plate

13. Position the spool and sleeve so that the pin (1) is parallel with the port face of the steering motor housing (3).

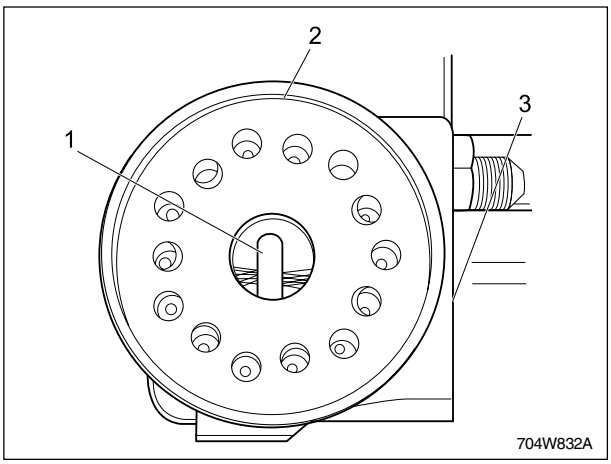

(1) Pin
(2) Spacer Plate
(3) Port Face of Steering

14. Insert the drive shaft (1) into the motor so that its slotted end engages the pin in the spool and sleeve. Mark a line on the face of the drive shaft that is parallel to the pin and to the port face of the steering motor housing (2).

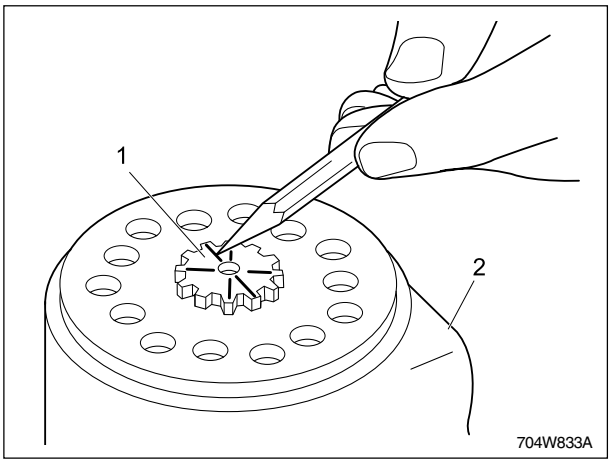

(1) Drive Shaft (2) Motor Housing

15. Coat a new O-ring (2) and seal ring (3) with clean hydraulic fluid and install on the rotor (1). Install a new O-ring (4) in the groove on the stator, then fit the rotor and stator together so that their O-ring are on opposite sides.

NOTE:

- *The orientation of the rotor and stator on the drive shaft will determine valve timing in the steering motor. These parts must be installed as described.*

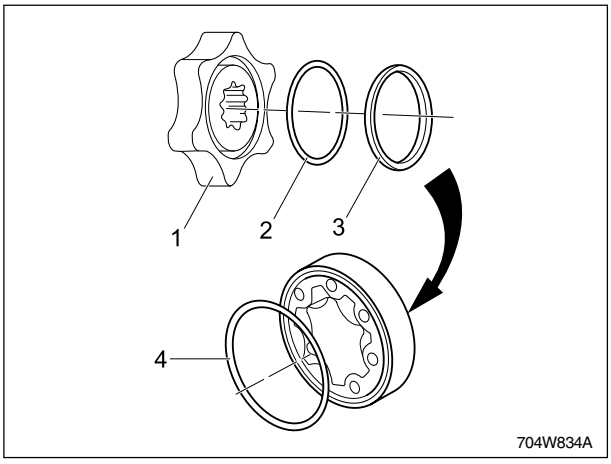

(1) Rotor (3) Seal Ring
(2) O-ring (4) O-ring

16. Position the rotor and stator on the steering motor with the seal side up. Visually align the holes in the spacer plate and stator while doing so. Before engaging the drive shaft splines with the rotor, align the mark (2) on the end of the drive shaft so that of the line were extended across the rotor and stator, it would cut across two of the valleys of the rotor.

NOTE:

- *A sign that the rotor is positioned correctly that the tip of one rotor lobe is resting halfway between the valleys (1) in the stator directly above the port face side of the steering motor (3), and on the opposite side a lobe is resting in the bottom of the stator valley.*

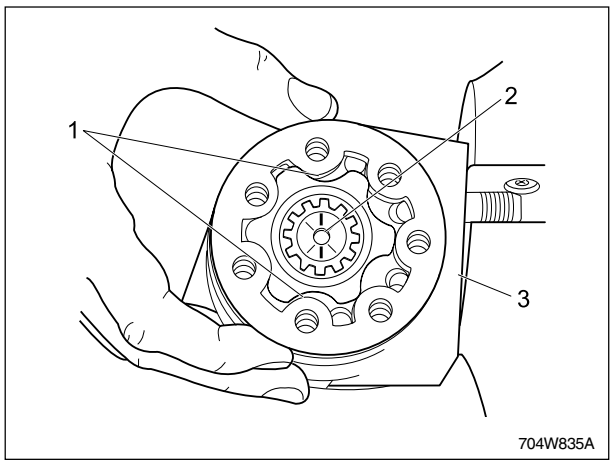

(1) Valley
(2) Mark
(3) Port Face of Steering

17. When the steering motor is assembled correctly the following areas should be aligned:

    a. The port face (3) of the steering motor housing

    b. The pin (2) through the spool and sleeve

    c. The line (1) drawn on the drive shaft

    d. The middle of the two valleys in the rotor

    If any of these areas are not aligned, the steering motor will not operate properly.

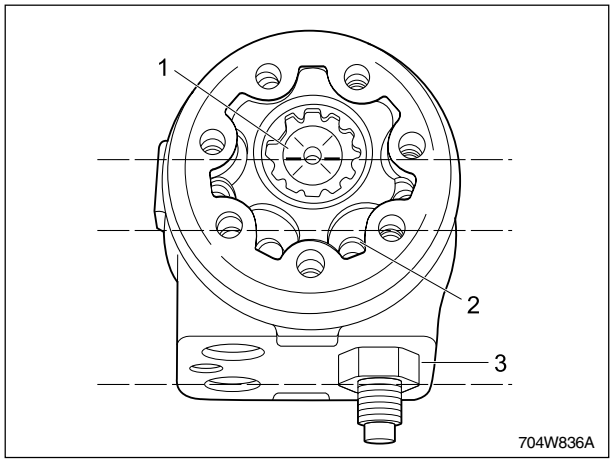

(1) Line
(2) Pin
(3) Port Face

18. Using a new O-ring, position the end cap on the steering motor (3), aligning its bolt holes with those on the stator. Install the seven end cap retainer bolts finger tight while making sure that the check ball retainer bolt (1) is in the correct hole (2).

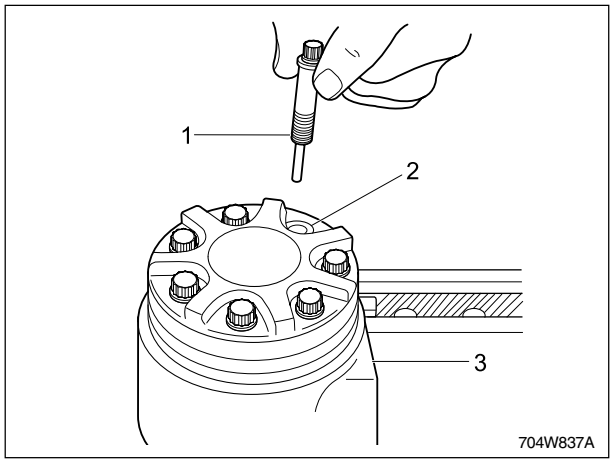

(1) Check Ball Retainer Bolt
(2) Correct Hole
(3) Steering Motor

19. Tighten the end cap retainer bolts (1) in the sequence shown in Figure in two stages, first to about 8 lb·ft., and then to 21 lb·ft. After torquing the bolts, check that the spool turns freely in the motor.

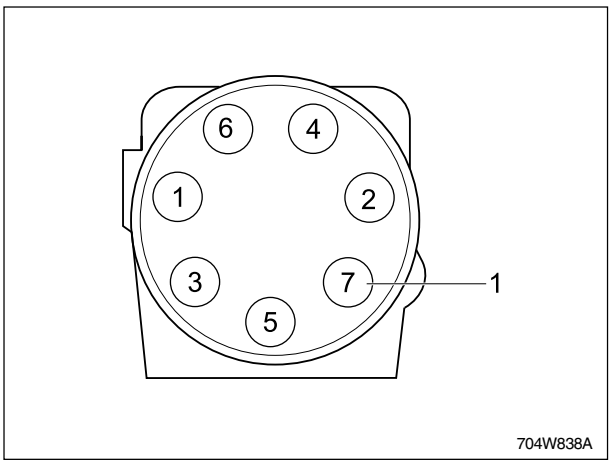

(1) End Cap Retainer Bolts

4.3 STEERING CYLINDER REMOVAL

4.3.1 DISASSEMBLING, ASSEMBLING AND SERVICING

1. Disconnect the steering hoses (1, 2)
2. Pull out the split pin (5) and remove the nut (6).
3. Tap the end of support pin using a plastic hammer. Pull out the support pin from the front axle case.
4. Remove the bolt (3) and pull out the cylinder support pin (4) from the center pin.
5. Remove the steering cylinder assembly.

(When reassembling)

- When attaching the steering cylinder to the center pin, make sure the position of spacers (9) is correct. See the following figure.
- Apply grease to cylinder support pin and grease nipples (A).

Item	Tightening torque
End nut	48.0 ~ 55.9 Nm 4.9 ~ 5.7 kgf-m 35.5 ~ 41.2 lb-ft

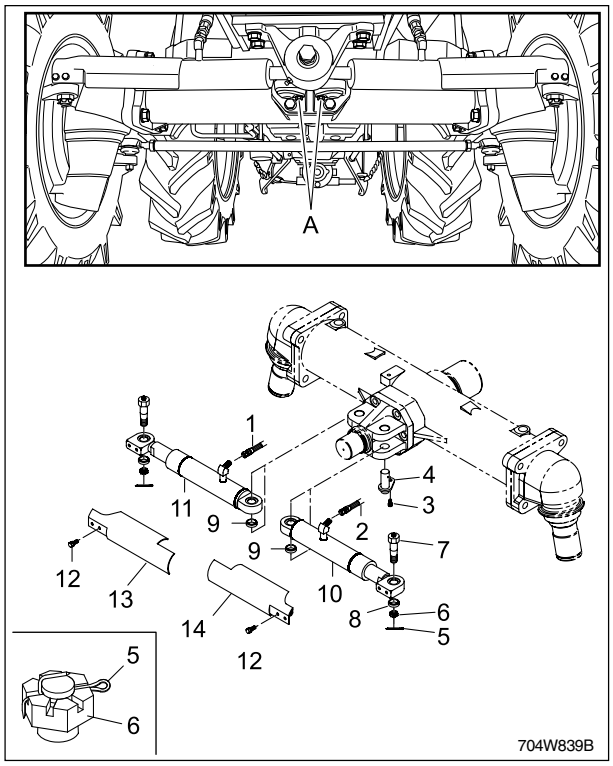

(1) Steering Hose (R)
(2) Steering Hose (L)
(3) Bolt
(4) Cylinder Support Pin
(5) Split Pin
(6) Nut
(7) Support Pin
(8) Spacer
(9) Spacer
(10) Steering Cyliner(LH)
(11) Steering Cyliner(RH)
(12) Bolt
(13) Cylinder Cover(RH)
(14) Cylinder Cover(LH)

4.4 STEERING WHEEL

4.4.1 STEERING WHEEL CLEARANCE

IMPORTANT

- ***Before disassembling the power steering system, check the performance of hydraulic relief assembly and power steering motor using a hydraulic tester.***
- ***Do not disassemble the power steering motor needlessly.***
- ***After removing of disassembling the power steering components, be sure to bleed air from the system.***

(Bleeding)

- ***Start the engine. Then turn the steering wheel slowly in both directions all the way alternately several times, and stop the engine.***

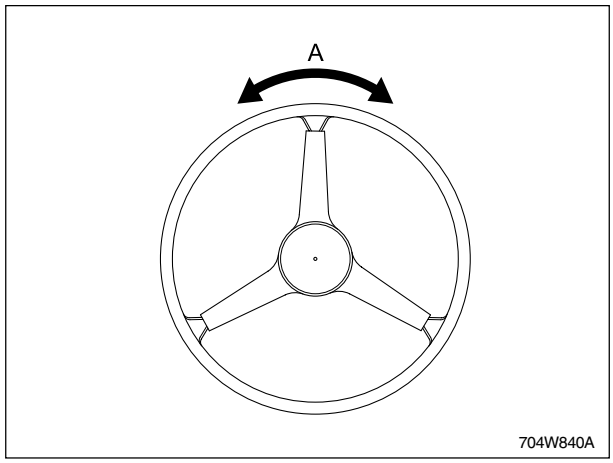

(A) Clearance

4.4.2 STEERING WHEEL OPERATING FORCE

1. Start the engine. After warming up, set the engine speed at approx. 2,800 rpm
2. Set a spring balance to the steering wheel to measure the operating force.
3. If the measurement exceeds the factory specification, check the performance of hydraulic relief assembly and power steering motor using a tester.

Item	Factory spec.
Steering wheel operating force	Less than 5.9 N 0.6 kgf 1.31 lbs.

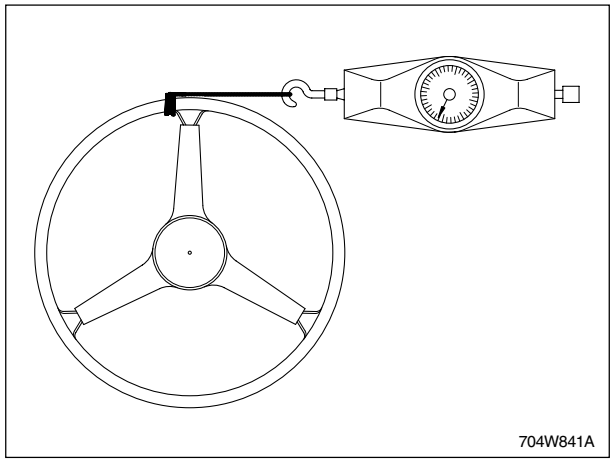

4.5 STEERING PRESSURE

4.5.1 STEERING RELIEF OPENING PRESSURE TEST

1. Disconnect the steering hose (1) to be tested and connect the manometer (over 150 bar).

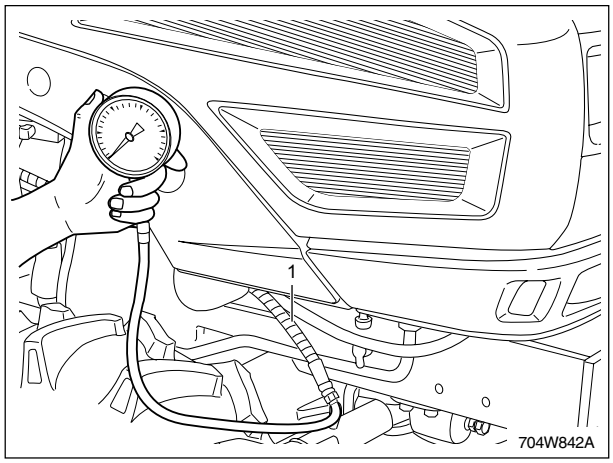

2. Start the engine and turn the steering wheel to the direction which the manometer is connected.

WARNING

- ***Be careful of the turning direction of the steering since the oil spurts from the steering cylinder if the steering wheel is turned to the opposite direction.***
- ***The spurting fluid with high pressure can penetrate your skin. In this case, see your doctor immediately. Otherwise, your skin or muscle can be seriously damaged.***

3. Adjust the pressure as necessary.

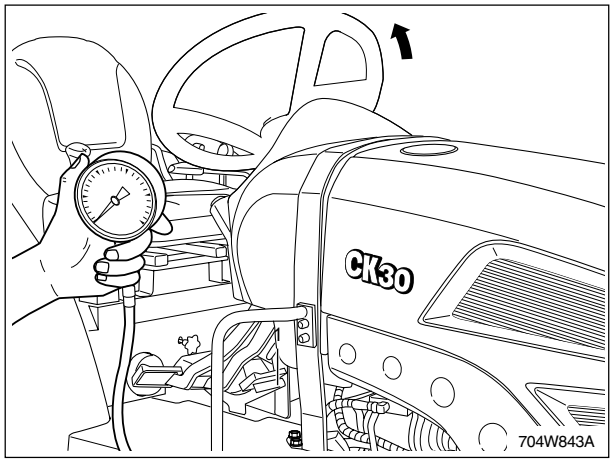

4.5.2 RELIEF PRESSURE ADJUSTMENT

1. Turn the plug (A) for setting relief valve 90° at one time and measure the steering relief pressure.
2. Turn the plug clockwise to increase the pressure.
3. When the right pressure is achieved, lock the plug.

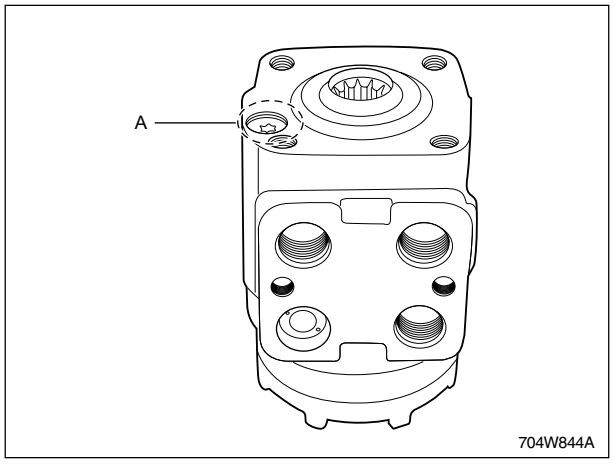

MEMO

CK25/27/30/35

HYDRAULIC SYSTEM

TABLE OF CONTENTS

1. SPECIFICATION 10-3

1.1 General specifications 10-3

1.2 Lift control (MLS) valve 10-3

2. OPERATING PRINCIPLE 10-4

2.1 Hydraulic scheme 10-4

2.2 Hydraulic circuit diagram 10-5

2.3 Oil filter 10-7

2.3.1 Structure of oil filter 10-7

2.3.2 Function and operation 10-7

2.4 3-point hydraulic system 10-8

2.5 Hydraulic power take-off 10-9

2.5.1 Hydraulic block 10-9

2.5.2 Relief valve (hydraulic block) 10-10

2.6 Joystick valve 10-11

2.6.1 Location and stucture 10-12

2.6.2 Operation 10-13

2.7 Auxiliary control valve (if equipped) 10-19

2.8 Lift control (MLS) valve 10-20

2.8.1 Structure and circuit 10-20

2.8.2 Operation of MLS control valve 10-21

2.9 Link mechanism of lift cylinder 10-24

2.9.1 Position control 10-25

2.9.2 Draft control (if equipped) 10-26

3. TROUBLESHOOTING 10-28

3.1 Power lift assembly 10-28

3.2 Joystick valve 10-29

4. SERVICING 10-30

4.1 Hydraulic pump 10-30

4.2 Joy-stick valve 10-31

4.2.1 Removing the joy-stick valve 10-31

4.2.2 Disassembling the joy-stick valve 10-32

4.2.3 Joy-stick valve assembly 10-33

4.3 Separating the hydraulic cylinder ... 10-35

4.3.1 Rops 10-35

4.3.2 Seat, levers 10-35

4.3.3 Fender 10-35

4.3.4 Front cover, step 10-36

4.3.5 Links 10-36

4.3.6 Tube, aux. control valve (if attached) 10-37

4.3.7 Hydraulic cylinder 10-38

4.3.8 Disassembling the hydraulic cylinder 10-39

4.3.9 Control (MLS) valve disassembly, assembly and inspection 10-42

4.4 Inspection for overhaul 10-49

4.4.1 Hydraulic cylinder bore 10-49

4.4.2 Clearance relationship between hydraulic arm shaft and bush 10-49

4.4.3 Reaction spring assembly reference dimension 10-50

4.4.4 Dimensional setting of position control bolt 10-50

4.4.5 Lever position setting 10-50

4.4.6 Sensibility adjustment 10-51

1. SPECIFICATION

1.1 GENERAL SPECIFICATIONS

Item		Reference Dimension
Hydraulic pump	Type	Gear
	Pump capacity	47.3 ℓ/min (12.5 gpm)
	Pump gear ratio	1/1
Main hydraulic filter	Micron rating	150 (mesh)
	Area	1,078 cm^2 (167.1 in^2)
HST hydraulic filter (CK25H/27H/30H)	Micron rating	62 ± 6 (max.) 44 ± 4 (min.)
Hydraulic block (optional)	Relief valve setting pressure	175 ~ 180 kgf/cm^2 (17.2 ~ 17.7 MPa)
Joy-stick valve	Type	4way 5Position
	Nominal flow rating	45 ℓ/min
Auxiliary valve (optional)	Type	Double acting Control Valve 2way 3Position

1.2 LIFT CONTROL (MLS) VALVE

A. TECHNICAL FEATURES

- Functioning at controlled position
- Three point linkage fixed
- Possibility to regulate the lowering speed of implement
- Manual hydraulic stop against accidental lowering of implement during road transport
- Limit stop of lifting arms in position of maximum height determined by position lever
- Sector control with lever
- Functions with oil of transmission
- Oil filter not built-in
- Required degree of filtering : 20 ~ 25 μm
- Oil temperature : 80°C

B. DIMENSIONAL FEATURES

Item	Reference Dimension
Piston diameter	90 mm (3.54 in)
Working stroke	87.5 mm (3.45 in)
Piston displacement	556.6 cm^3 (34 in^3)
Angular excursion of lifting arms in controlled position	70°
Angular excursion of lifting arms in internal mechanical limit stop	78°
Excursion of control lever	68°
The position relifef valve is external of the rockshaft calibration of relifef valve	188.6 kgf/cm^2 (18.5 MPa)
Calibration of cylinder safety valve	224 kgf/cm^2 (22 MPa)

2. OPERATING PRINCIPLE

2.1 HYDRAULIC SCHEME

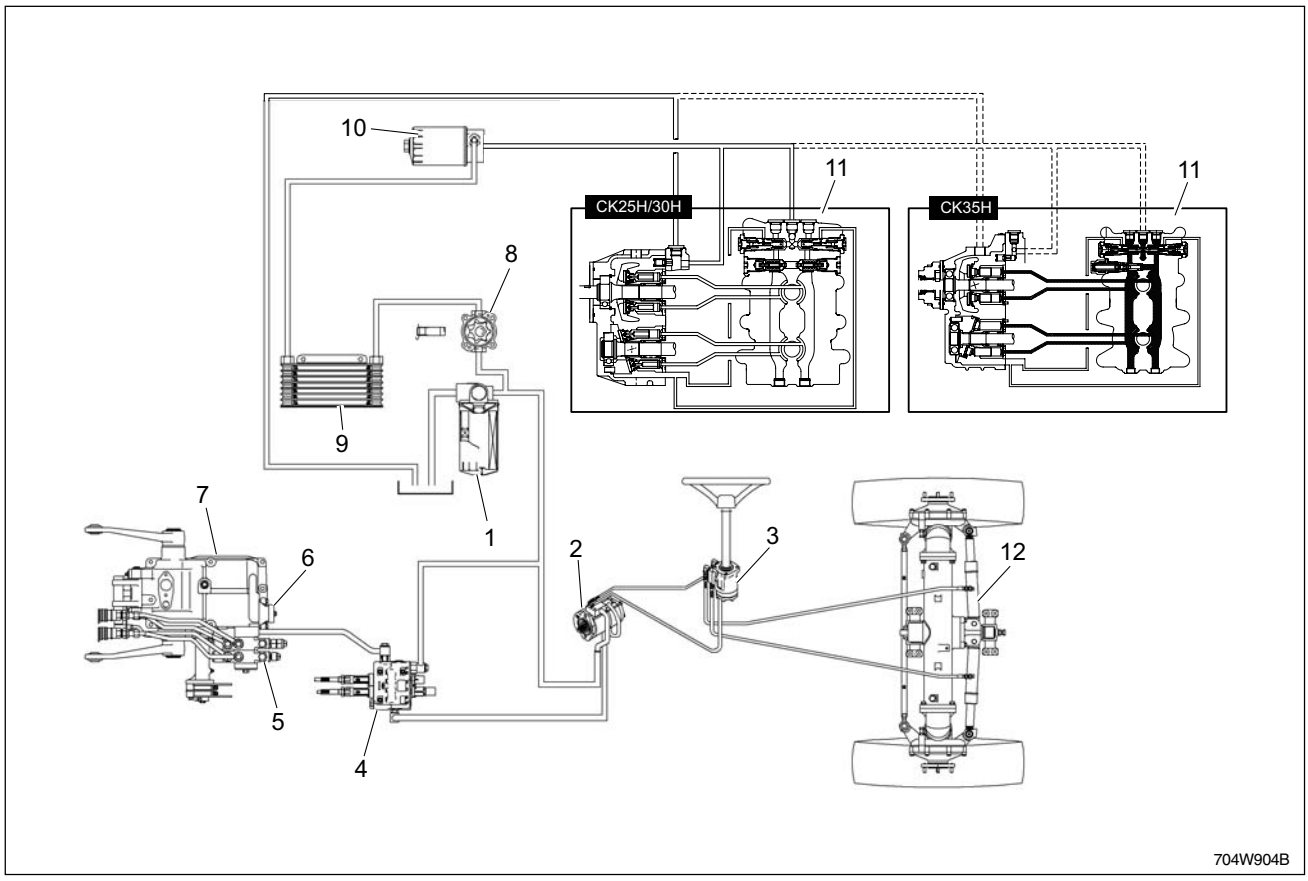

(1) Oil Filter
(2) Gear Pump
(3) Power Steering Unit
(4) One Lever Joy-Stick Valve: Optional
(5) Auxiliary Valve (Detent Type): Optional
(6) Control Valve (MLS Valve)
(7) Hydraulic Cylinder
(8) HST Charge Pump
(9) Oil Cooler
(10) HST Filter
(11) HST
(12) Steering Cylinder

The hydraulic system consists essentially of a fluid tank, hydraulic pump, oil filter, oil cooler (CK25H, CK27H, CK30H), HST (CK25H, CK27H, CK30H), Joystick valve, control valve, and lift links.

The rear axle and transmission case serve as a common hydraulic fluid tank and supply fluid to the hydraulic pump (2) through the filter (1) and suction tube.

The hydraulic pump supplies fluid to the system control valve through the high-pressure line.

The control valve, when operated, affects raise, neutral, or lowering action of the lift arms.

2.2 HYDRAULIC CIRCUIT DIAGRAM

FOR HST TYPE

CK25H/30H

SPECIFICATION

PUMP DISPLACEMENT	0 ~ 23.3 cc/rev
MOTOR DISPLACEMENT	23.3 cc/rev
MAX. INPUT SPEED	3000 rpm
MAX. OUTPUT SPEED	0 ~ 3000 rpm
MAX. WORKING PRESSURE	280 kgf/cm²
CHARGE PUMP DISPLACEMENT	6.2 cc/rev
ANGLE SWASH PLATE	0 – 18
COLOR	GRAY

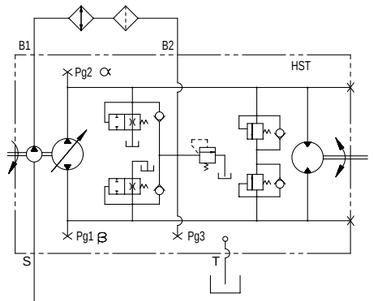

CK35H

SPECIFICATION

PUMP DISPLACEMENT	0 ~ 28.1 cc/rev
MOTOR DISPLACEMENT	28.1 cc/rev
MAX. INPUT SPEED	3000 rpm
MAX. OUTPUT SPEED	0 ~ 3000 rpm
MAX. WORKING PRESSURE	300 kgf/cm²
CHARGE PUMP DISPLACEMENT	6.2 cc/rev
ANGLE SWASH PLATE	0 ~ – 18
COLOR	GRAY

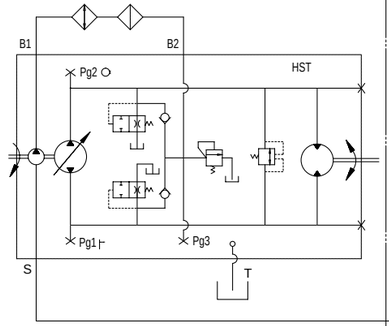

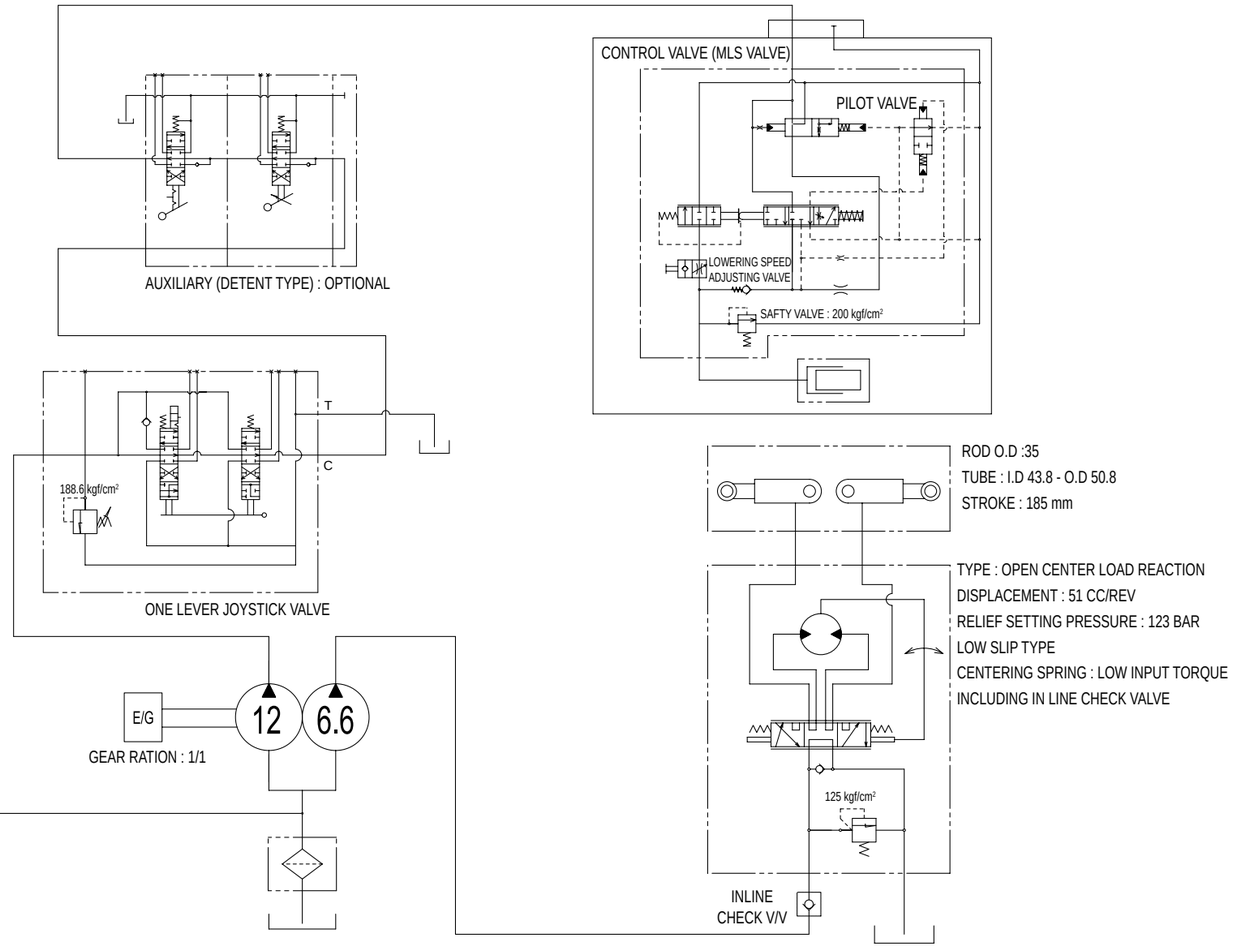

704W901C

2.3 OIL FILTER

2.3.1 STRUCTURE OF OIL FILTER

The suction filter (1) is a canister-type filter and should be replace after 200 hour of use.

There is a permanent magnet installed on the center of the element of the hydraulic filter on the inlet hydraulic pump and the filter mounted on the hydraulic lift is structured.

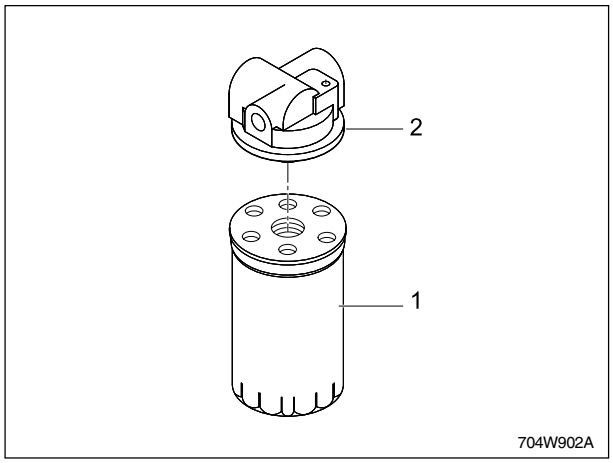

(1) Hydraulic Filter

(2) Filter Bracket

2.3.2 FUNCTION AND OPERATION

A. FUNCTION

It filters any particle or contaminated substances.

B. OPERATION PRINCIPLE

The filtering system as of an inlet filter installed on the inlet gear pump is composed of filter bracket and element ass'y.

The filter used for CK series tractors is applicable to both hydraulic lift and steering wheel direction control circuits.

The hydraulic oil flows into the IN port of the filter bracket. The transmission oil is delivered into the hydraulic element ass'y (3) and delivered out through the outlet port to the hydraulic pump. All foreign substances are filtered by the element at this time.

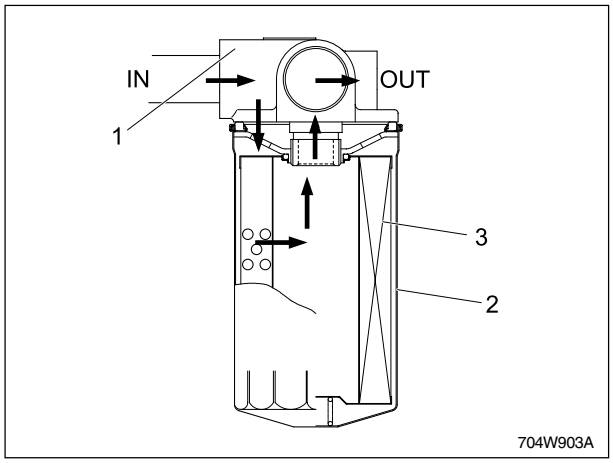

(1) Filter Bracket

(2) Hydraulic Filter

(3) Hydraulic Element Ass'y

C. TO CHECK

The hydraulic filter shall be replaced every service term of 200 hours.

NOTE:

- *When assemble the cooling hose(2) to the oil cooler (1), hold the oil cooler hex parts by the 27 mm spanner, and fasten the joint bolts using by the 19 mm spanner.*

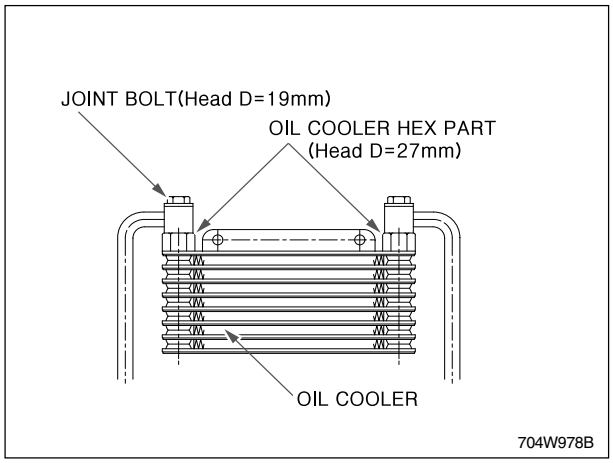

2.4 3-POINT HYDRAULIC SYSTEM

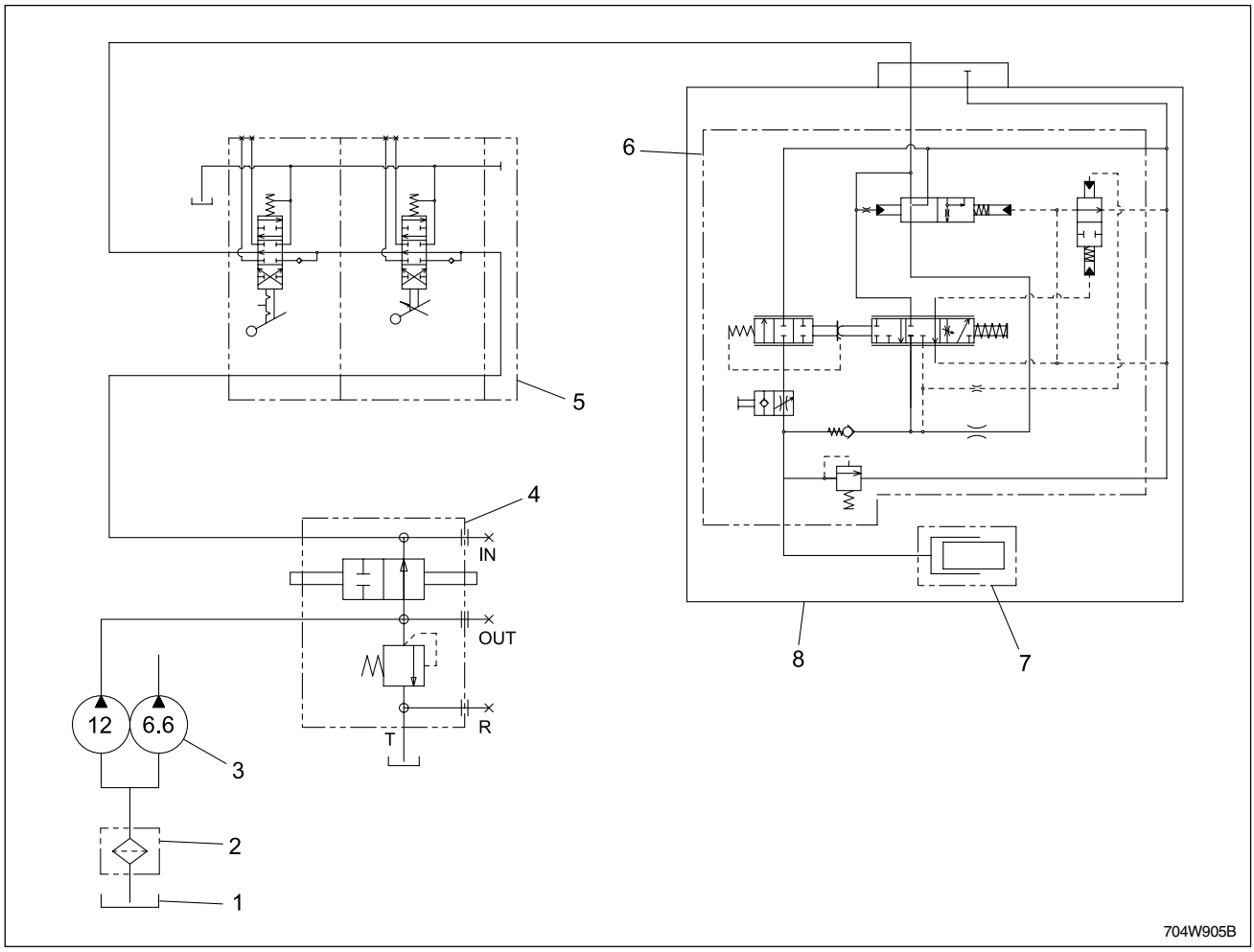

(1) Oil Tank (Transmission Case)
(2) Oil Filter
(3) Hydraulic Pump
(4) Relief Valve (Optional)
(5) Aux. Control Valve
(6) Control Valve (MLS)
(7) Hydraulic Cylinder
(8) Hydraulic Cylinder Block

1. If the engine is started and the hydraulic pump (3) is rotated, hydraulic pump intakes oil from transmission case (1) through suction pipe. Hydraulic pump is supplied with oil and oil sludge is removed by oil filter.
2. Oil passes through filter by hydraulic pump to hydraulic cylinder. If tractor installed with a front loader, oil pressure is extracted into front loader from hydraulic block, re-flown in hydraulic block, and then connected with hydraulic circuit.
3. Oil enteres into position control valve through the hydraulic pipe.
4. The position control valve selects oil flow and oil enters the hydraulic cylinder or exhausts into oil tank (transmission case) to operate 3-point hydraulic system.

* Hydraulic system contains a relief valve to limit the max. pressure of the hydraulic circuit.

* To use hydraulic working machine, operate working machine clinder using the double acting valve when extracting hydraulic pressure.

2.5 HYDRAULIC POWER TAKE-OFF (IF EQUIPPED)

2.5.1 HYDRAULIC BLOCK

This hydraulic block type outlet is provided to operate the hydraulic cylinders on the attached implement, such as a front loader or a front blade.

If the joystick valve is installed, the hydraulic block is not installed.

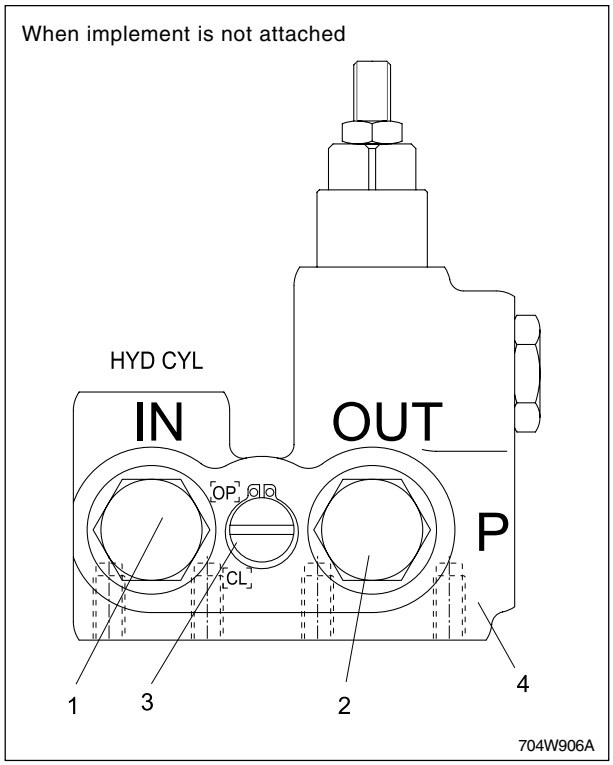

(1) Inlet plug (PF 3/8") (3) Spool
(2) Outlet plug (PF 3/8") (4) Hydraulic Block Body

[When using front loader or other implements]

1. Remove the plugs from the outlet (2) and inlet (1) of the hydraulic block (4).
2. Install the adaptors to the outlet and inlet.
3. Connect the hydraulic hose to the outlet adaptor and to the implement control valve inlet.
4. Connect the other hydraulic hose to the inlet adaptor and to the implement control valve outlet.
5. Turn the slit on the spool (3) end to arrow side fully as shown in the figure.

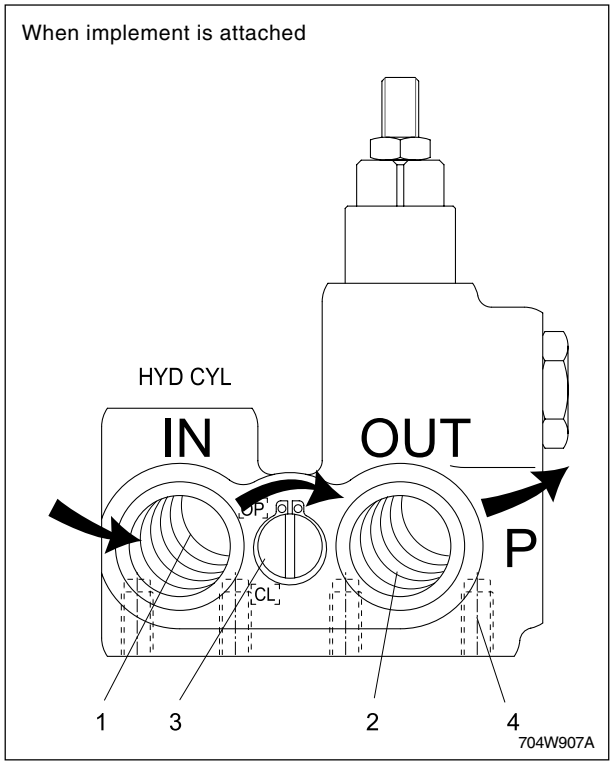

(1) From Implement (3) Spool
(2) To Implement (4) Hydraulic Block Body

CAUTION

- ***When the lift cylinder or the remote hydraulic valve is used, oil can be leaked from the valve of the implement due to back pressure if the hydarulic line of the implement is connected to the hydraulic block. Therefore, the valve equipped with the carry-over function should be used or hydraulic pressure taken from the remote hydraulic valve should be used to prevent back pressure.***

2.5.2 RELIEF VALVE (HYDRAULIC BLOCK)

- As shown in the figure, a guide is attached at the poppet(6).

  Intake of the valve is enabled through the sliding of part of the guide. The clearance of seat(5) to chamber minimizes valve vibration due to the damping effect.
- If oil pressure does not exceed the specified pressure of the relief valve, the relief valve will not operate and oil flows from the hydraulic pump to the inlet of the hydraulic cylinder.
- As the oil pressure of the circuit increases, that of damping chamber D.C. increases. If the pressure exceeds the specified valve and the spring tension, the valve will open to flow oil through port T to the transmission case. If oil is discharged sufficiently and if pressure is less than specified, the valve will be closed.

Item	Factory spec.
Relief valve setting pressure	17.2 ~ 17.7 Mpa 175 ~ 180 kgf/cm² 2489 ~ 2560 psi
Engine speed	Max.
Oil temperature	45 ~ 55°C 113 ~ 131°F

NOTE:

- *The hydraulic block has the main relief valve and is installed in the tractor which is not equipped with the joystick valve. For the tractor equipped with the joystick valve, the main relief valve is installed in the joystick valve.*

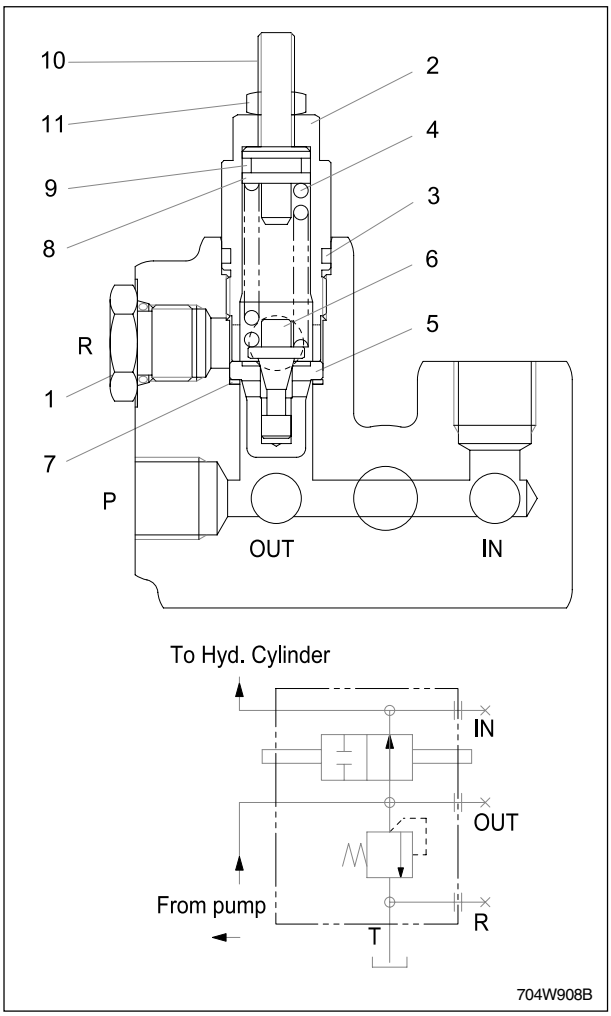

(1) Plug (PF 3/8")
(2) Retainer
(3) O-ring
(4) Spring
(5) Seat
(6) Poppet
(7) Metal Seal
(8) Plunger
(9) O-ring
(10) Adjusting Screw
(11) Lock Nut

2.6 JOYSTICK VALVE

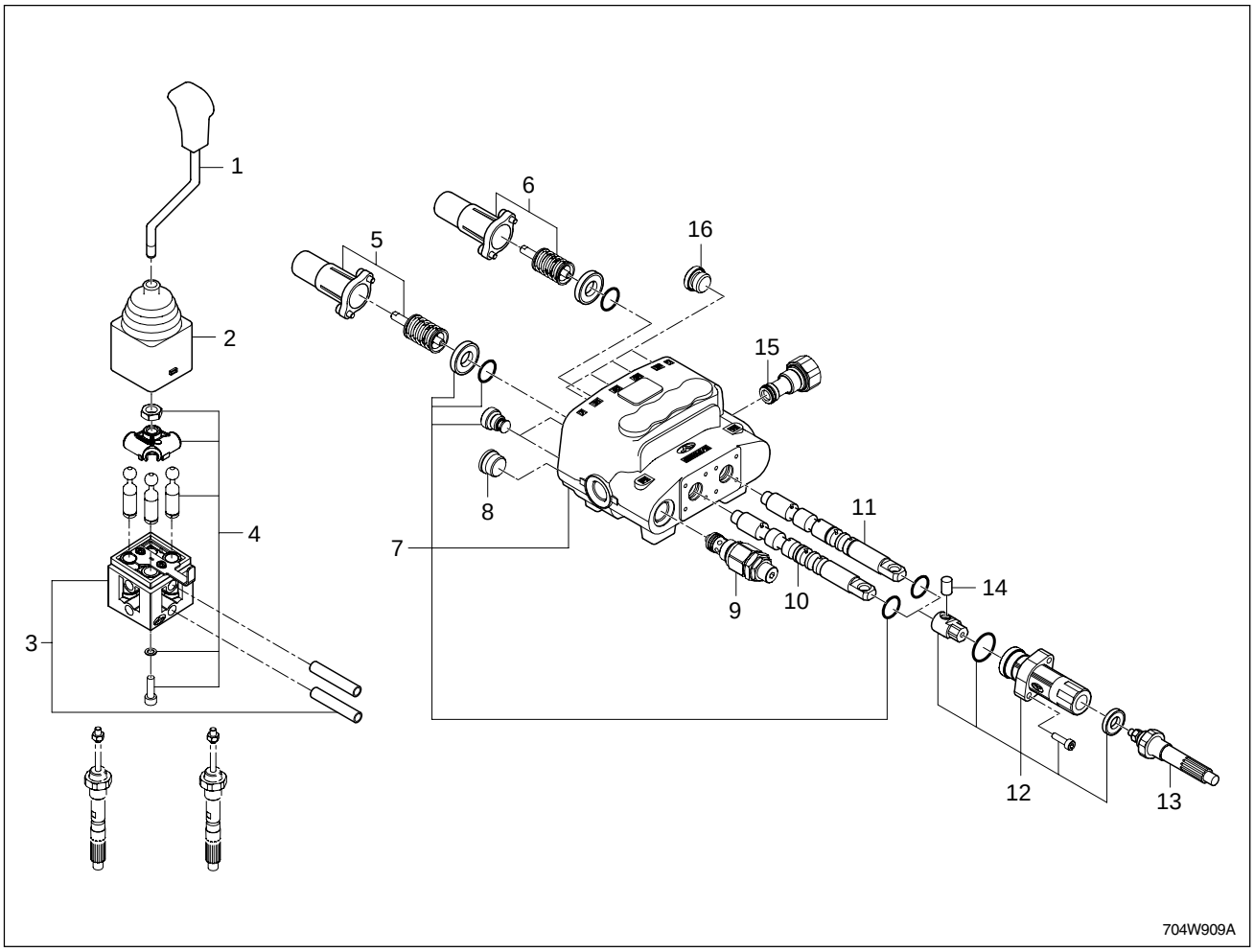

(1) Handle
(2) Rubber, Bellow
(3) Body Ass'y
(4) Mechanical Joystick Lcb Ass'y
(5) Spool Positioner
(6) Spool Positioner
(7) Body Ass'y
(8) Plug
(9) Valve, Relief
(10) Spool
(11) Spool
(12) Cable Remote Cap Ass'y
(13) Cable
(14) Pin
(15) Plug
(16) Plug

2.6.1 LOCATION AND STUCTURE

The Joystick valve is mounted on the right side of front cover.

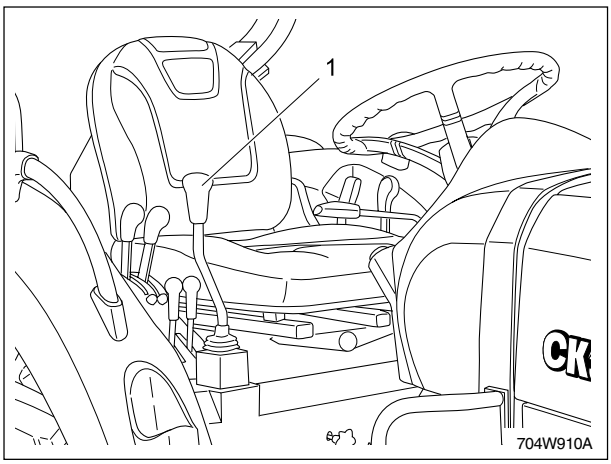

(1) Joystick Valve

The double-spool remote valve also contains a spring-loaded detent mechanism to provide a float position for loader operation. In float position, fluid is free to flow between piston and rod sides or the loader lift cylinder allowing the lift arms to float over uneven terrain.

The double-spool remote control valve contains check valves located in the valve spool passages. The check valves function to hold the loader lift and bucket cylinders in a fixed position while the valve is being initially operated to prevent dropping the load. In operation, the check valve is retained on its seat by spring force plus the back side pressure of fluid contained in the loader cylinder. During initial spool movement, pump-pressurized fluid fills the passage to the check valve, and the remaining pump fluid flows to the sump through the open center passage. With continued spool movement, the open center passage closes.

Pump pressure increases on the force of the check valve, overcoming the backside pressure, and causes the check valve to open. Pump fluid flow then flows to the cylinder. This action prevents any backflow out of the cylinder and provides a smooth-lifting action of the loader.

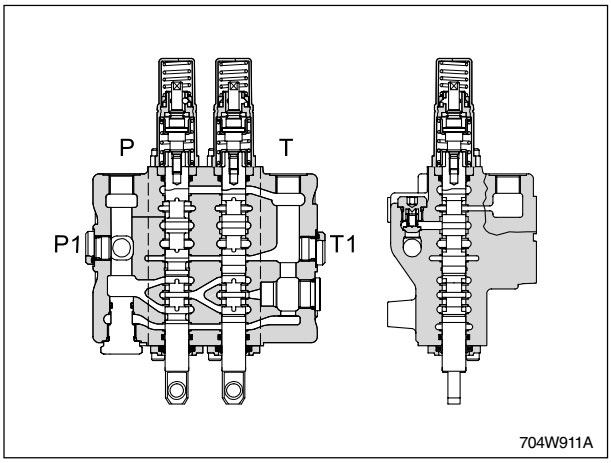

2.6.2 OPERATION

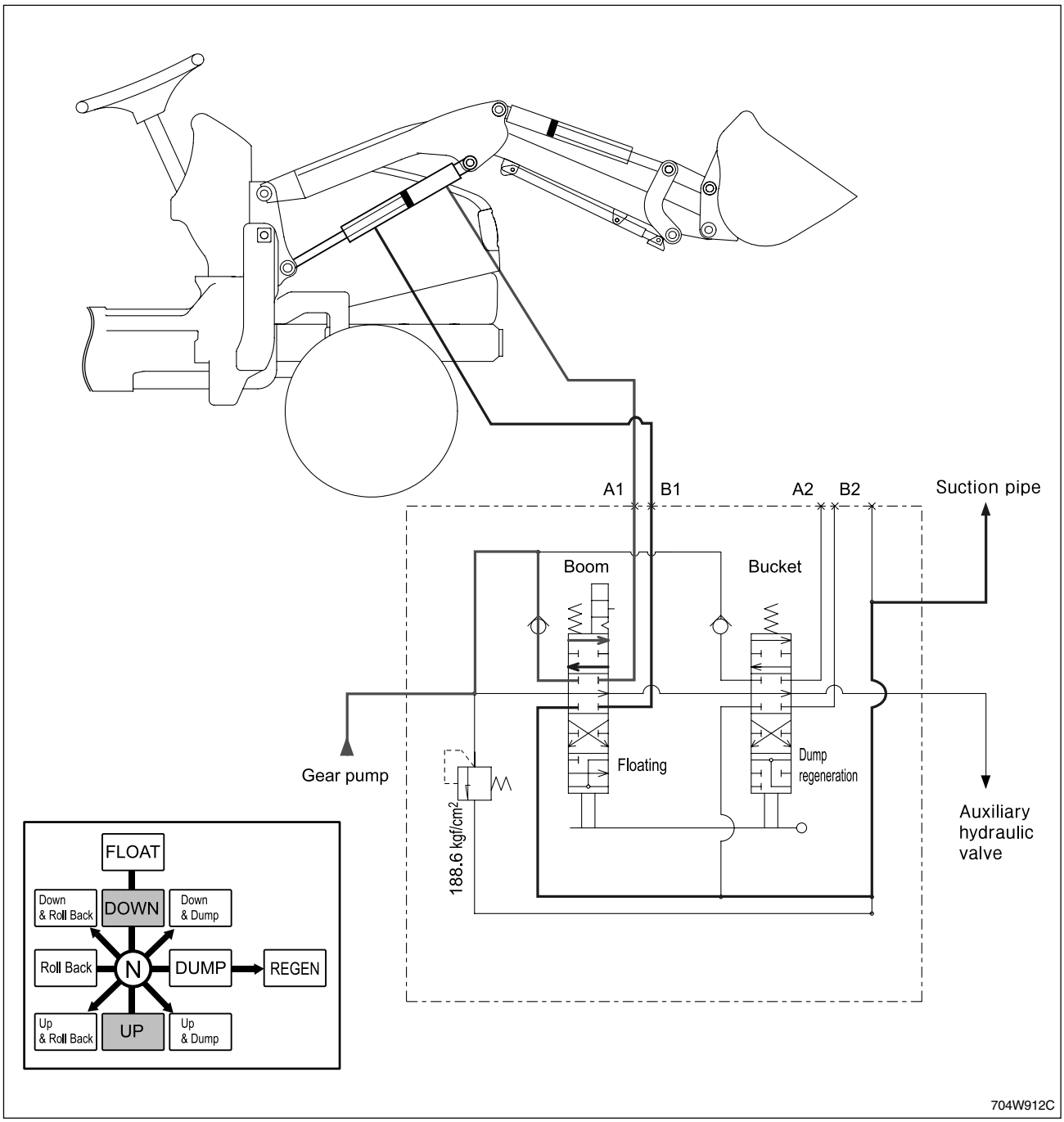

A. BOOM UP:

When the joystick is pulled backward (toward the driver), the hydraulic fluid drawn from the (A1) port flows to the cylinder bore of the boom cylinder and the cylinder is expanded. The fluid in the rod side of the cylinder escapes from the cylinder and then returns to the valve through the (B1) port.

B. BOOM DOWN:

Conversely, when the joystick is pushed forward, the hydraulic fluid drawn from the (B1) port flows to the rod side of the boom cylinder and the cylinder is retracted. The oil in the bore side returns to the valve through the (A1) port.

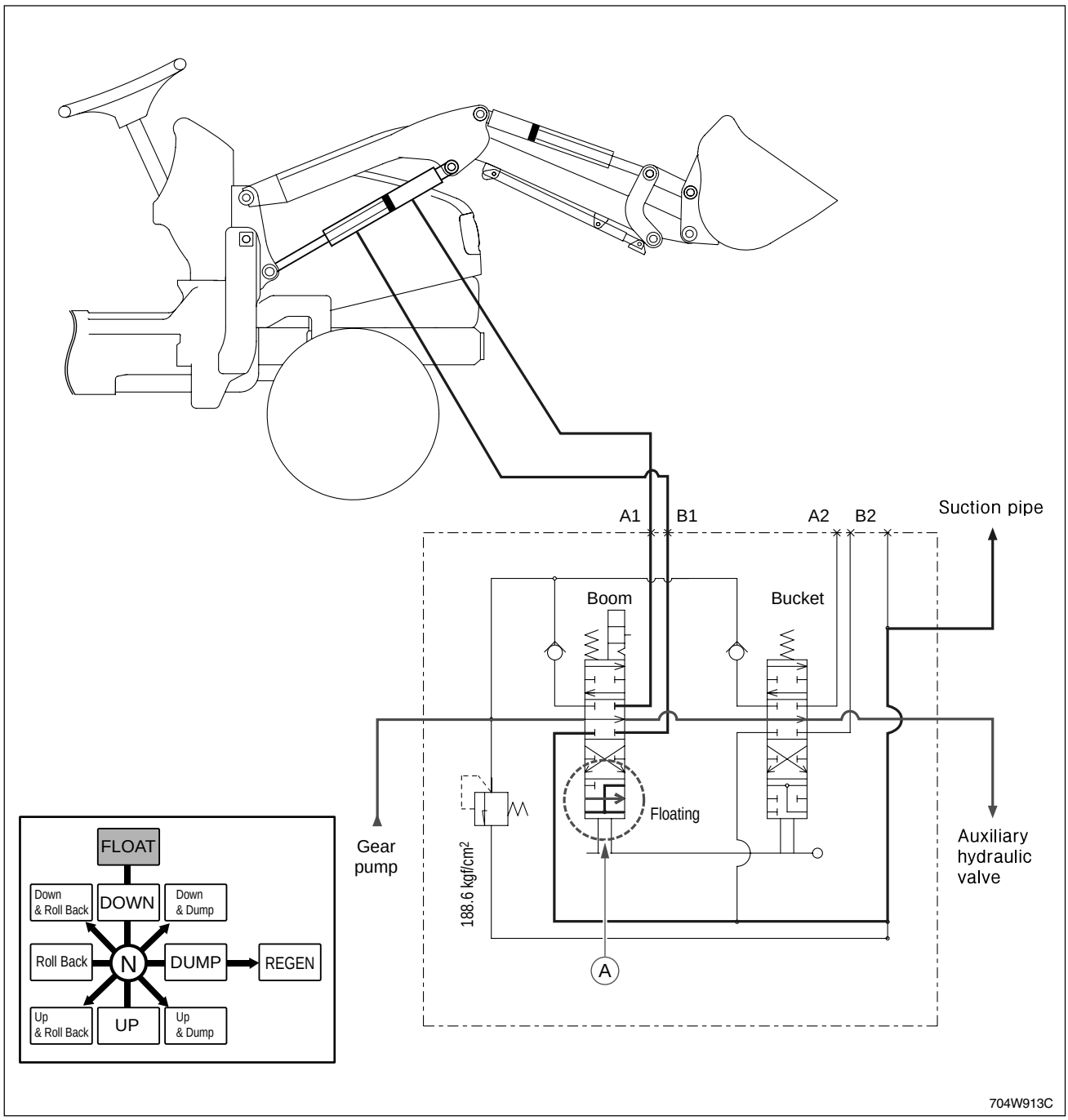

C. FLOATING:

When the joystick is pushed further, it passes to the floating range and it stays at this range unless any other force is applied by the detent function installed on the rear side of the spool.

The floating position of the valve allows the loader to move up and down, such as following the contour of the ground when back scraping. The passage in the valve are opened to tank and the cylinders are filled or drained depending on the movement of the loader, the lines and cylinders remain full of oil because the cylinders suck back fluid from the tank. This position sends no fluid power to the loader.

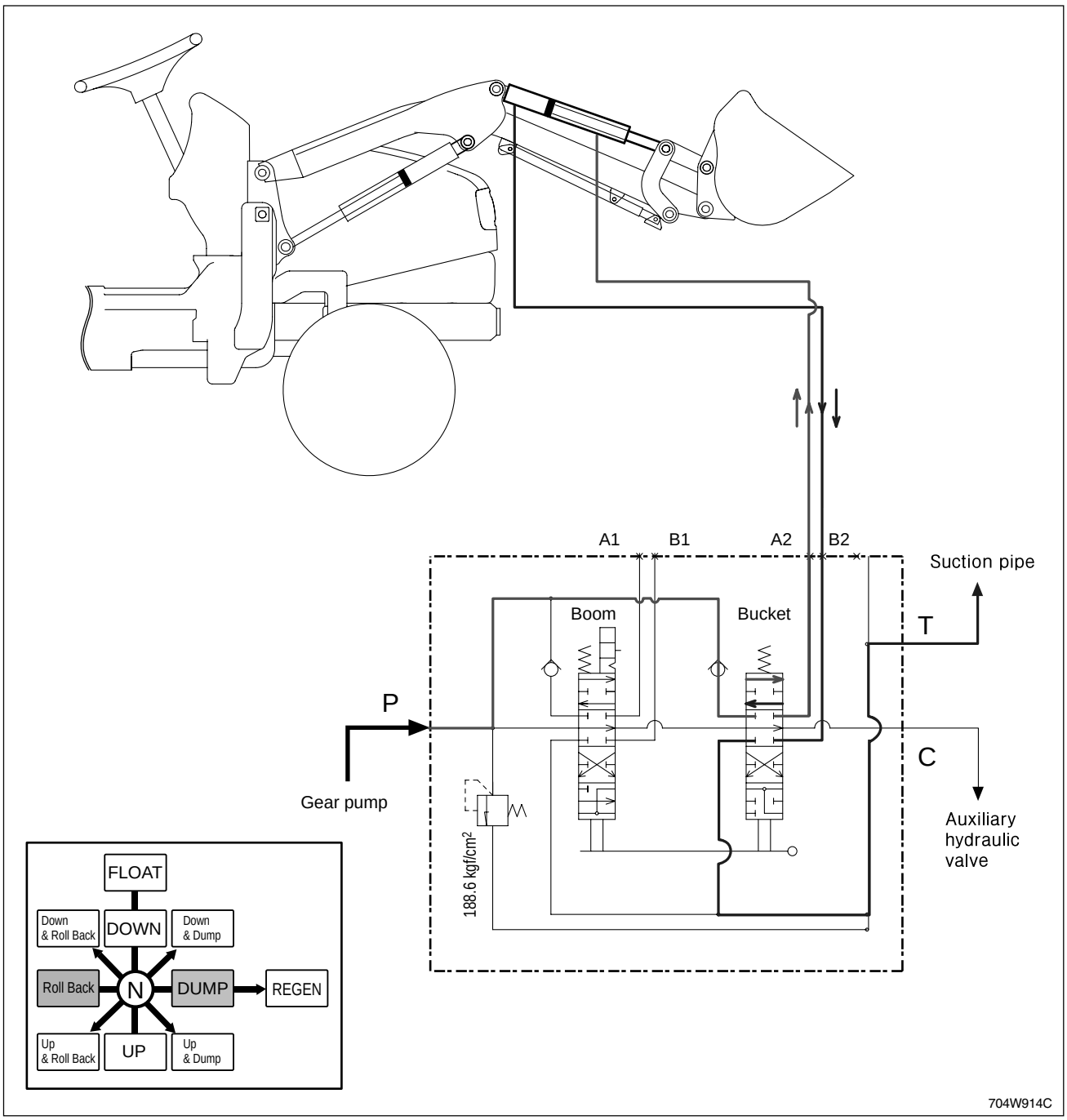

D. BUCKET ROLL BACK:

When the joystick is moved to the left, the bucket is rolled back. When the joystick is moved to the right, the bucket is unfolded (dump). However, these operations can be switched if the hose is connected the front loader reversely.

When the joystick is moved to the left, the hydraulic fluid flows to the (A2) port in the figure and then to the rod side of the bucket cylinder so that the cylinder is retracted and the bucket is rolled back. In this case, the fluid in the bore escapes the cylinder, flows to the valve through the (B2) port and then returns to the suction pipe.

E. BUCKET DUMP:

When the joystick is pushed to the right, the hydraulic fluid from the (B2) port flows to the bore of the bucket cylinder so that the bucket cylinder is expanded and the bucket is dumped. In this case, the fluid in the cylinder rod side escapes the cylinder, flows to the valve through the (A2) port and then returns to the suction pipe through the return port.

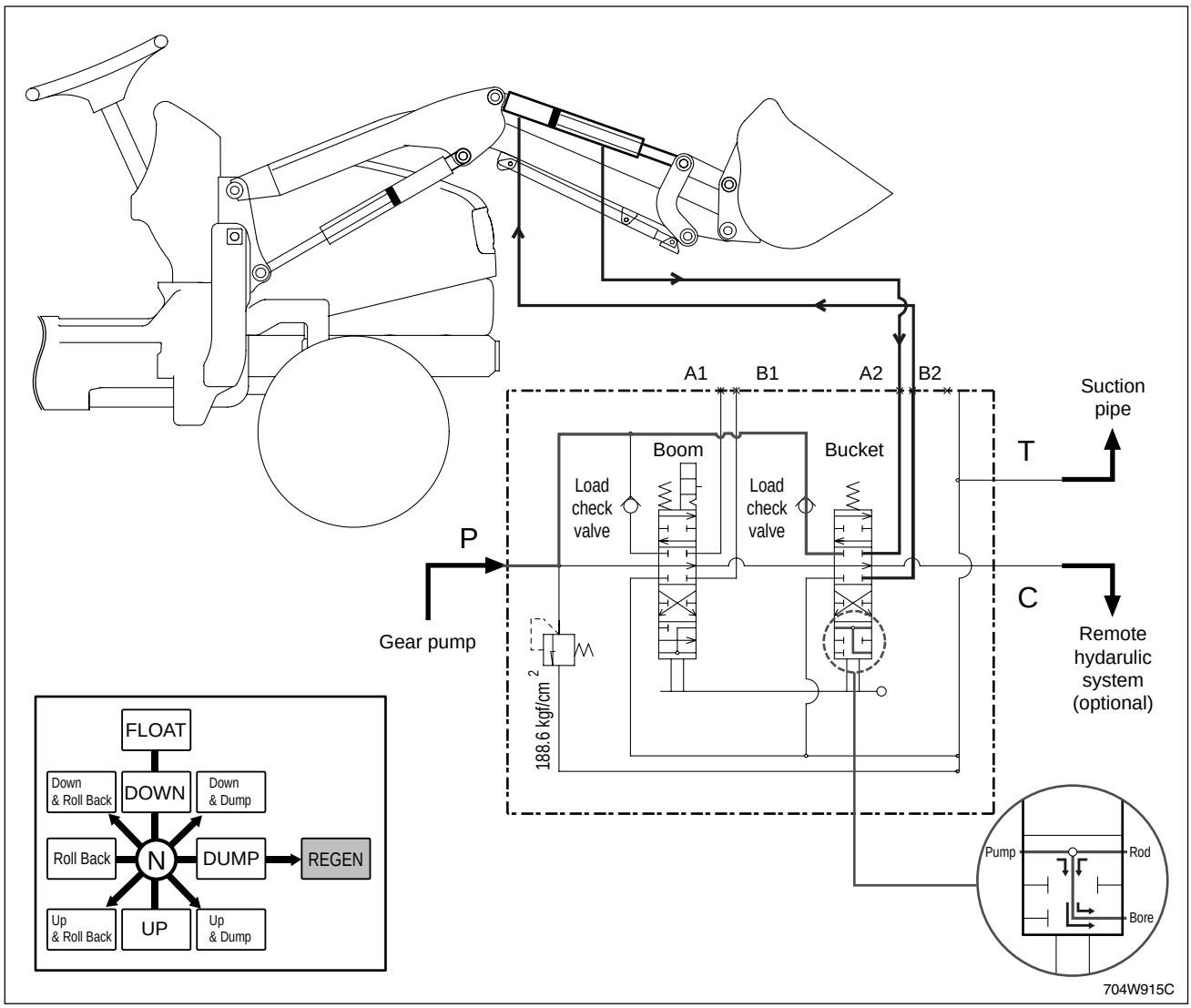

F. BUCKET REGENERATION:

When the joystick is pushed further to the right, the regeneration function is activated. This function is automatically deactivated unless the driver applies force continuously since it does not have a detent function.

When the regeneration function is activated, hydraulic fluid inlet section of the valve in the bucket, bucket cylinder section and bucket load section are interconnected. The hydraulic fluid supplied by the pump is supplied to the bore section and the rod section of the bucket. However, more hydraulic fluid is supplied to the bore section since the dimension of the rod section in the cylinder piston is smaller than dimension of the bore section (pascal's principle).

When the amount of fluid in the bore section increases, the fluid in the rod section escapes the cylinder and returns to the valve. However, since this fluid flows to the bore section due to the connection, this fluid is used again for the bore expansion. This is call "regeneration". As the expansion speed of the bucket cylinder increases, the dumping speed of the bucket increases.

G. REVERSE REGENERATION PREVENTING FUNCTION:

As mentioned above, the fluid flows to the cylinder with larger dimension due to the Pascal's Principle. However, the regeneration function can be reversely activated due to the operating condition of the front loader of the angle of the bucket.

In other words, if the bucket cylinder is abruptly retracted when the boom is at the highest position, the object in the bucket can be fallen and cause a serious accident. However, such dangerous accident could be avoided by the load check valve integrated in the bucket circuit.

For example, if the regeneration function was reversely activated and the inlet fluid flowed to the rod section, the cylinder would be retracted and the fluid in the bore section would escape the cylinder and flow to the rod section. Since the amount of fluid escaped from the bore section is always larger than the amount of fluid to flow to the rod section, the excessive fluid would flow to the pump. However, this back flow is avoided by the load check valve. Consequently, the regeneration function cannot be reversely activated due to the structure of the circuit.

The regeneration function is to double the dumping speed using the gravity for the bucket and the dimension difference of the bucket cylinder and piston. Also, it is to prevent the cavitations, which is occurred by the pressure in the cylinder bore section due to the rapid expansion, by supplying the fluid rapidly.

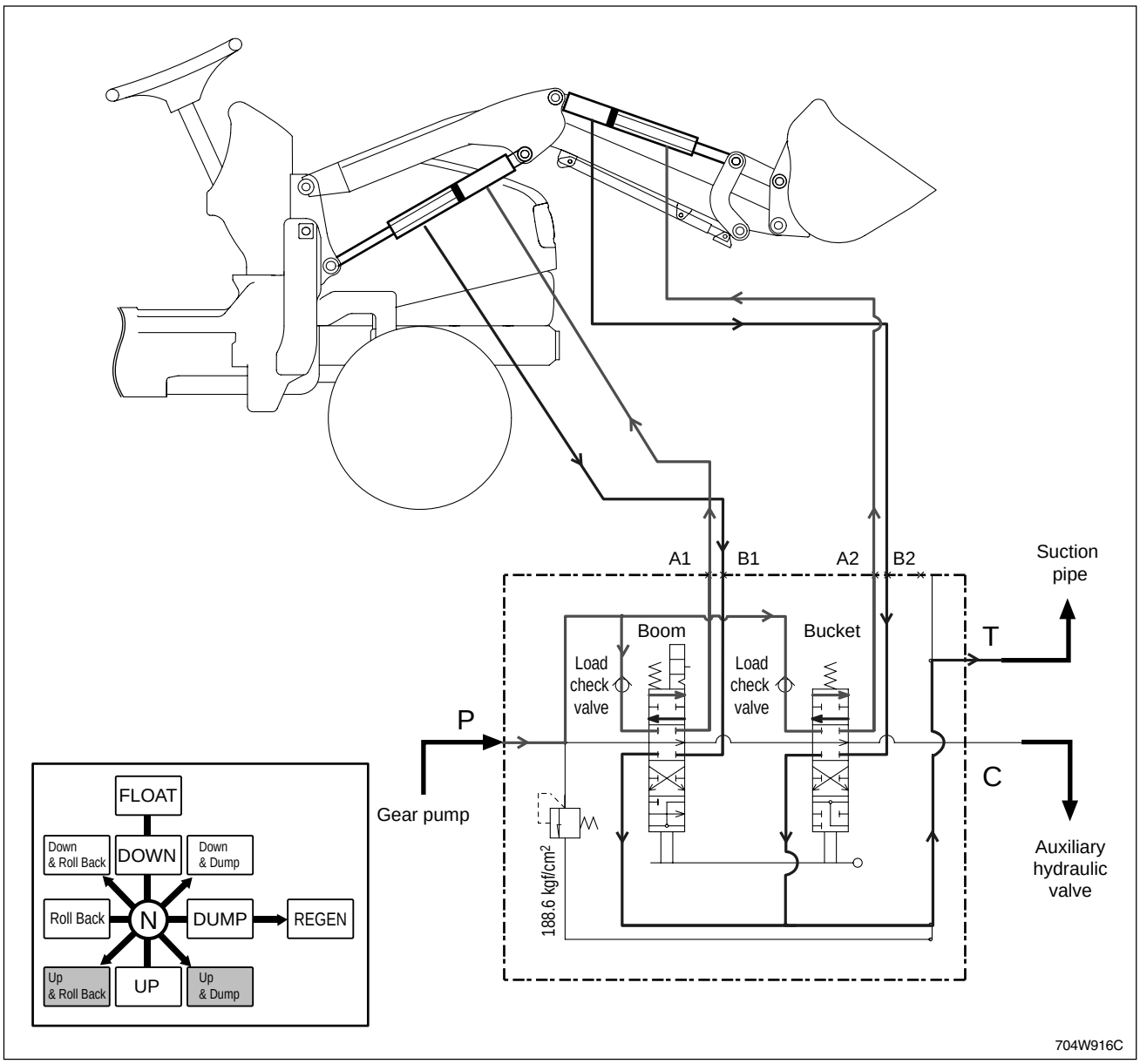

H. BOOM UP + BUCKET ROLL BACK:

When the joystick is pulled to the rear and the left diagonally, the boom rises and the bucket is rolled back.

The hydraulic fluid from the (A1) port of the boom flows to the bore section of the boom cylinder to lift the boom. Simultaneously, the fluid is drained from the (A2) port of the bucket to roll the bucket back. However, the boom cylinder and the bucket cylinder hardly operate at the same time since the piston dimensions of the bore section in the boom cylinder and the rod section in the bucket cylinder and the loads applied to the boom cylinder and the bucket cylinder are different. Therefore, most fluid flows to one cylinder with low load and this cylinder operates first. When this cylinder stroke process is completed, the other cylinder operates or the cylinder with low load operates at high speed and the cylinder with high load operates at low speed.

I. BOOM UP + BUCKET DUMP (OR REGENERATION):

When the joystick is pulled to the rear and the right diagonally, the boom rises and the bucket is dumped. Since the cylinder for the boom operates to the direction opposite to the gravity and the cylinder for the bucket operates to the direction same to the gravity, the load applied to both cylinders cannot be balanced easily.

In general, the bucket with low load operates and then the boom is lifted.

In this case, the hydraulic fluid, which supports the boom, flows to the bore section of the bucket and the boom may be lowered unintentionally. However, this case can be avoided by the load check valve installed to the boom.

J. BOOM DOWN (OR FLOATING) + BUCKET ROLL BACK:

When the joystick is pulled to the front and left diagonally, the boom is lowered and the bucket is rolled back.

Since the load applied to both cylinders cannot be balanced easily, the boom with low load is lowered first and then the bucket is rolled back.

Also, the load check valve is added to the bucket circuit to prevent the hydraulic fluid, which pushes the bucket to fold it, from flowing back to the boom with relatively low reactional force.

When the boom is floated, the hydraulic fluid drawn into the boom spool is carryovered to the bucket to operate the bucket freely.

K. BOOM DOWN (OR FLOATING) + BUCKET DUMP (REGENERATION):

When the joystick is pushed to the front and the right diagonally, the boom is lowered and the bucket is dumped. Both cylinders likely operate simultaneously due to the low load since the direction of both cylinders are same for the gravitational direction.

If the boom is set to floating, the bucket can be operated independently.

L. LOAD CHECK VALVE (2):

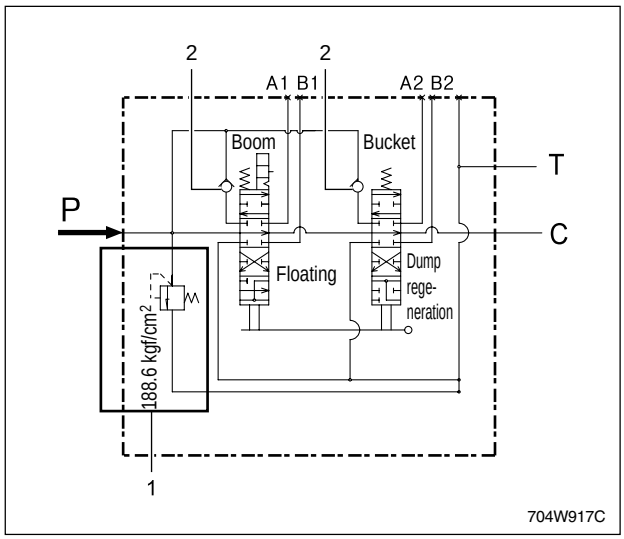

The load check valve is to protect the system by preventing a back flow in case of valve operation, as well as to prevent the leak down due to the leakage from the spool in case that the valve spool is in the neutral position.

The leak down refers to the phenomenon that the bucket or boom is lowered to the ground in long period of time after applying load to the boom or the bucket of the front loader and then lifting them.

M. MAIN RELIEF VALVE:

The main relief valve (1) is integrated in the joystick valve.

This valve is installed on the inlet section of the joystick valve. When operating the joystick valve, auxiliary double acting valve or hydraulic lifting cylinder, this valve opens and drains the fluid to the transmission to protect the circuit if the pressure in the circuit by the outer load is over 180 kgf/cm^2.

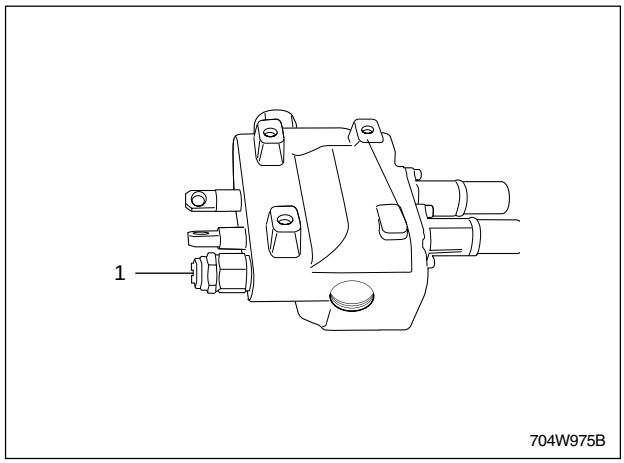

▶ CONDITIONS FOR MAIN RELIEF VALVE OPENING:

The relief valve will oopen and dump back to tank if:

- Too heavy a load is lifted by the loader or any implement attached to the rear remote hydraulic valve
- The joystick is operated without a loader attached
- The rear remote auxiliary valve is used without attachment
- 3 point hitch capacity is exceeded

If the relief valve frequently opens or opens for long period of time, the life of the parts in the hydraulic system could be shortened and the fluid could be leaked due to the rapid rise of the fluid temperature. Therefore, the operating condition of the valve should be checked.

* Main relief pressure: 180 kgf/cm^2 (17651.9 kPa, 2560.1 PSI)

2.7 AUXILIARY CONTROL VALVE (IF EQUIPPED)

A double acting detent type control valve is used. When the control valve operating lever is moved to the implement cylinder actuating position, the spool is moved and the oil from the pump port flows through A or B, causing the implement cylinder to operate.

The return oil from the implement cylinder flows out of the port A or B and returns to the transmission case.

This detent type valve can be used for the hydraulic motor which needs to be supplied with the hydraulic pressure continuously. However, if this valve is operated unintentionally or unnecessarily with the implement detached, the main relief valve opens which leads to power loss and system damage due to overheated hydralic oil.

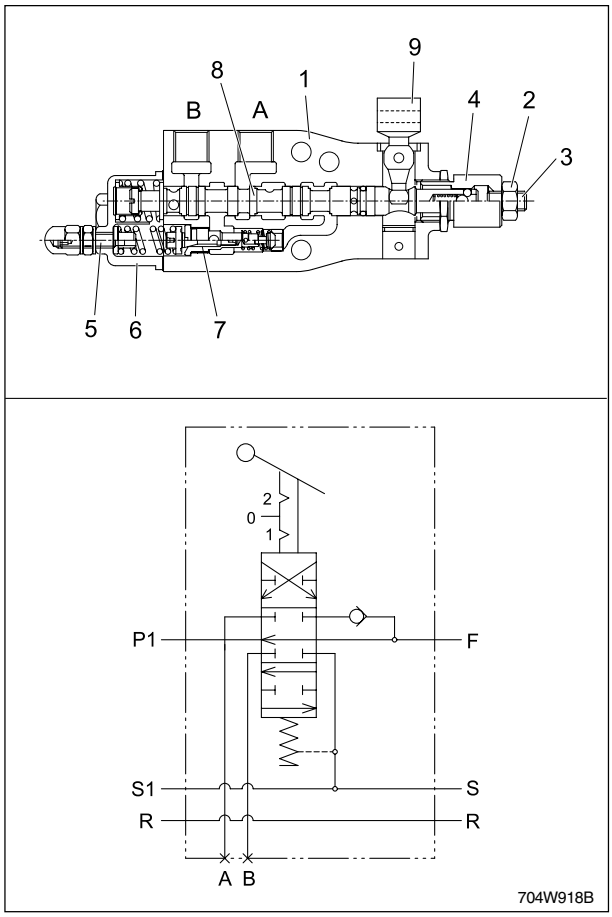

(1) Body	(4) Cover	(7) Safety Valve
(2) Nut	(5) Screw	(8) Spool
(3) Screw	(6) Cover	(9) Articulation

2.8 LIFT CONTROL (MLS) VALVE

2.8.1 STRUCTURE AND CIRCUIT

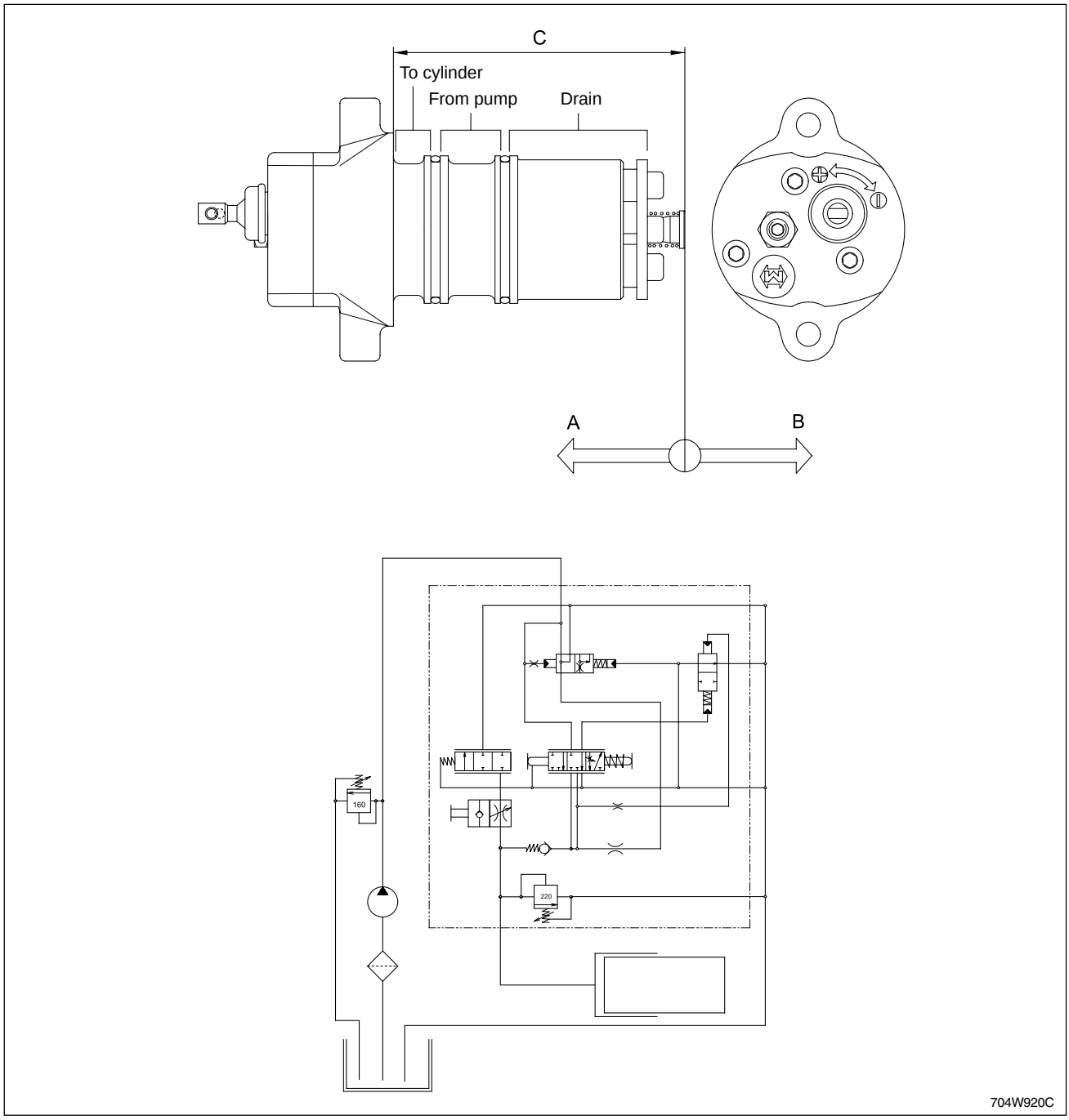

(A) Charge
(B) Discharge
(C) Neutral Position 109 ± 0.15

2.8.2 OPERATION OF MLS CONTROL VALVE

A. NEUTRAL

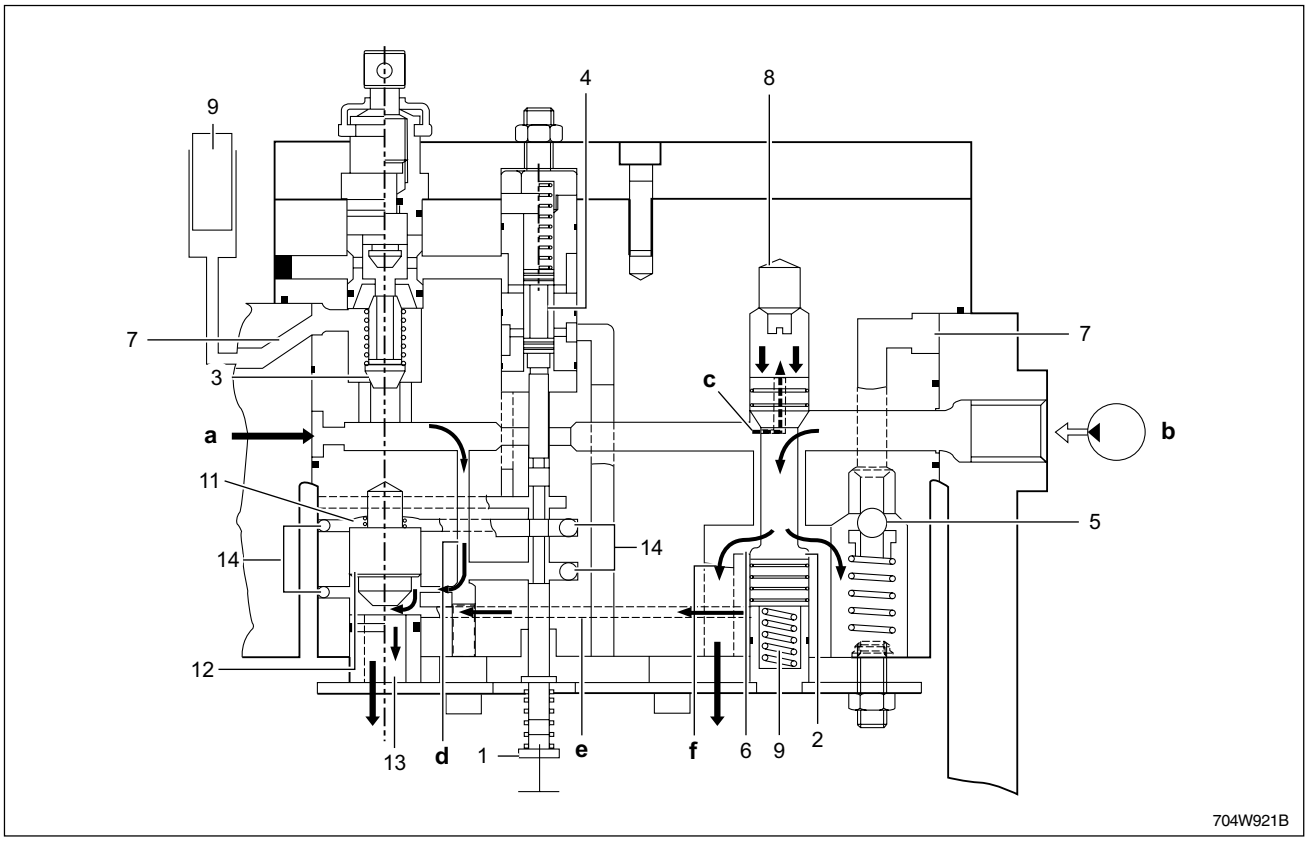

(1) Control Spool
(2) Regulator Piston
(3) Check Valve
(4) Discharge Valve
(5) Safety Valve
(6) Drain Hole
(7) Cylinder Duct
(8) Upper Chamber
(9) Spring
(10) Lift Cylinder
(11) Upper Chamber (Pilot Valve)
(12) Pilot Valve
(13) Pilot Drain Hole
(14) Steel Ball Plug

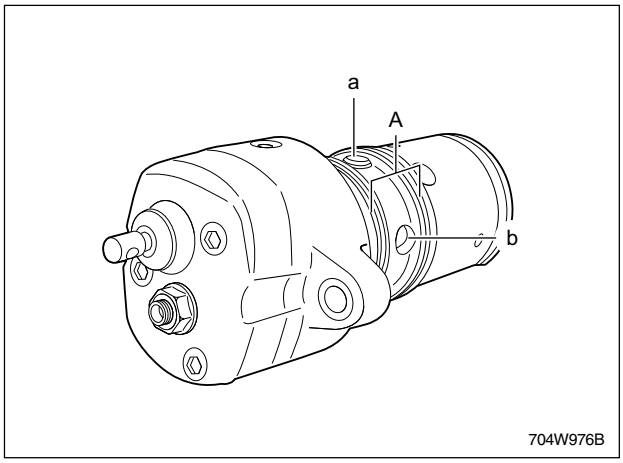

Neutral: The hydraulic fluid passed through the auxiliary double acting valve is supplied to the middle section (A) of the MLS valve and then flows into the valve through the brass orifice (a) and the (b) port.

The diameter of the brass orifice differs depending on the horse power of the tractor.

The hydraulic fluid supplied to the MLS valve through the (a) and (b) ports is drained and the fluid in the hydraulic lift cylinder remains by the check valve (3). Therefore, the 3-point hitch can maintain its position even when the load is applied to it.

The hydraulic fluid is supplied to the (b) port and its pressure rises since the fluid passage is blocked by the control spool (1). Then, the fluid is supplied to the top of the regulator piston through the hole (c). When the regulator piston is pushed down by this fluid, the drain hole (f) opens simultaneously to drain the fluid.

The hydraulic fluid supplied through the brass orifice (a) flows through the passage (d) formed by the pilot valve (12). When the pilot valve is pushed up by this fluid, the fluid is drained simultaneously. As the pilot valve opens, the passage (e) opens and the fluid under the regulator piston is drained so that the regulator piston can be moved downward easily.

B. LIFTING

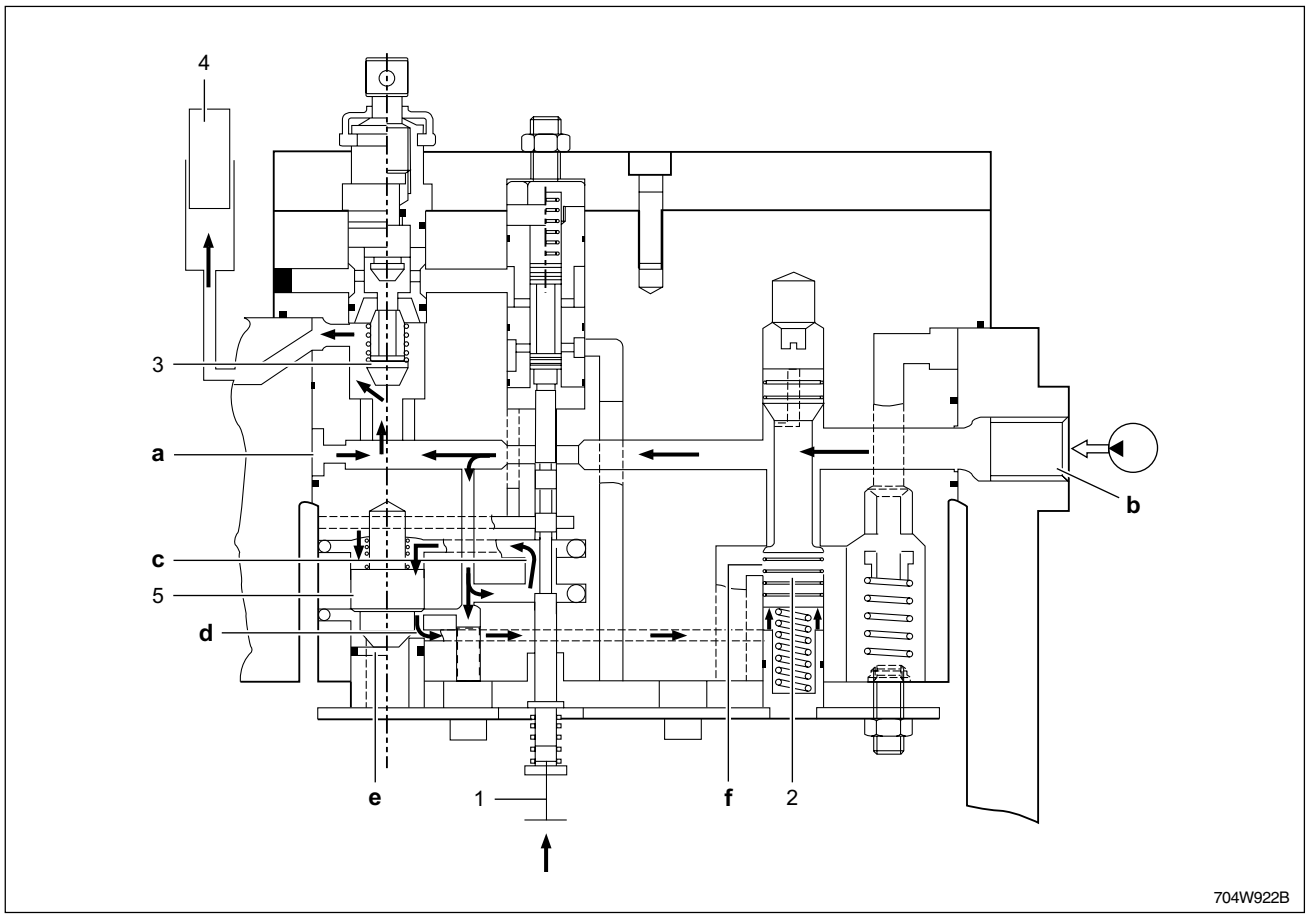

▶ LIFTING:

When the control spool (1) is pushed up and starts to open, the fluid drawn through the (b) port passes the spool and then joins the fluid drawn through the (a) port.

Meanwhile, the oil from the (a) port is supplied to the top of the pilot valve (5) and the bottom of the regulator (2) through the passage (c) and (d) as soon as the control spool opens.

Consequently, the pilot valve (5) is lowered and the drain passage (e) of the pilot valve closes. Then, the regulator piston (2) is lifted and the drain passage (f) on the bottom of the regulator piston is blocked.

As all the drain passages are blocked, the fluid passed through the control spool from the (b) port joins the fluid drawn through the (a) port. Then, as the fluid pressure rises, it pushes up the check valve (3) and this fluid is supplied to the hydraulic cylinder (4) to lift the lifting arm.

C. LOWERING

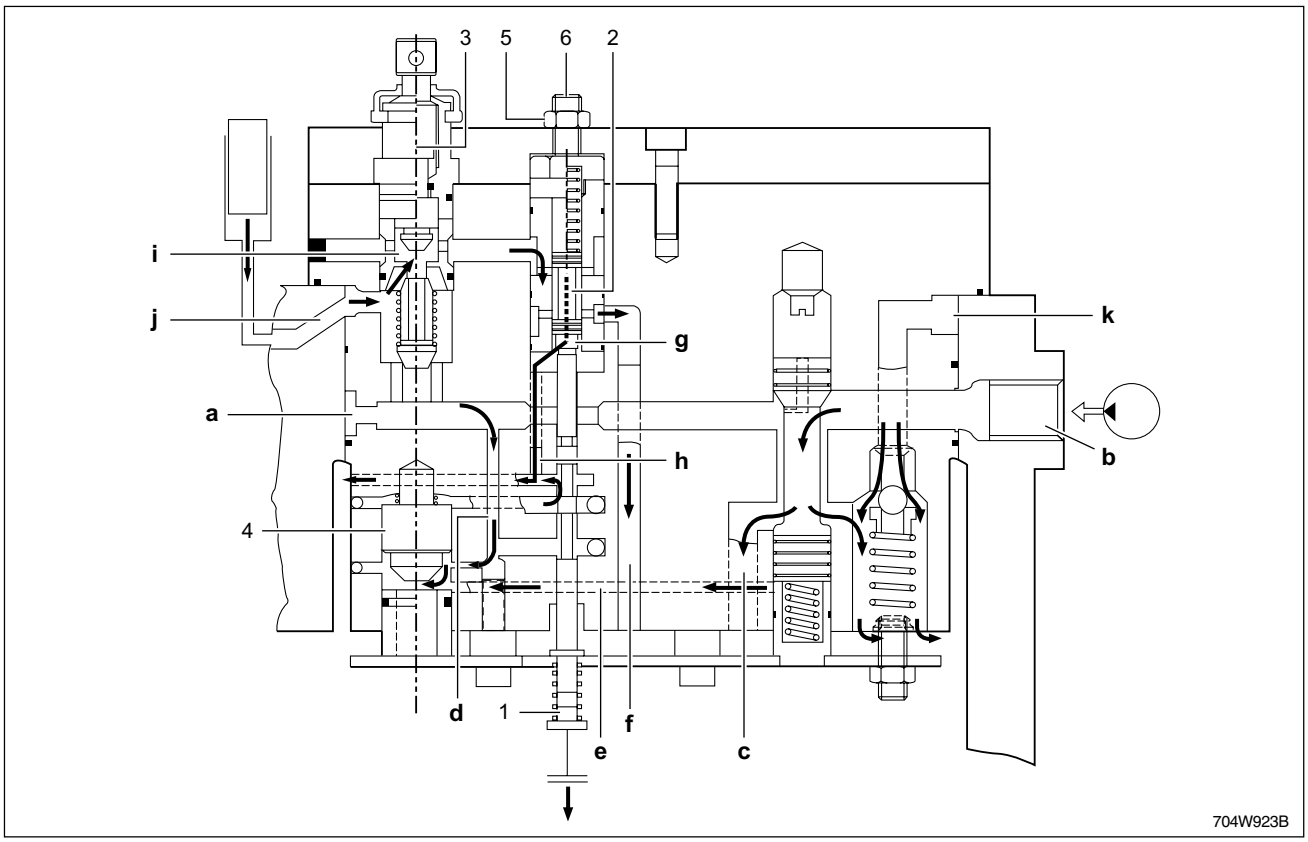

▶ LOWERING:

When the control spool (1) moves downward, the fluid passage between (a) and (b) ports are blocked as same as when the valve is in the neutral position.

The hydraulic fluid drawn through the (b) port is drained through the drain hole (c) on the bottom of the regulator piston. The hydraulic fluid drawn through the (a) port is supplied to the bottom of the pilot through the passage (d) to lift the pilot valve. Then, this fluid is drained as the fluid on the bottom of the regulator piston is drained through the passage (e).

As the control spool moves downward, the discharge valve (2) moves downward by the upper spring to open the drain passage. Therefore, the lifting arm is lowered as the fluid in the lifting cylinder is drained through the drain passage (f).

The small oil hole (g) on the bottom of the discharge valve is to drain the fluid from the top of the discharge valve when the exhaust valve is closed again.

The fluid on the top of the discharge valve is drained through this hole and the fluid passage (h).

Lowering speed adjust valve:

When turning the handle of the lowering speed adjust valve (3) from outside, the size of the fluid passage (i) is adjusted and, therefore, the lowering speed of the lifting arm can be adjusted. When turning the handle clockwise to its end, passage is completely blocked and the lifting arm can be locked at a certain position.

Pilot valve (12):

The pilot valve (4) delays the initial fluid flow by opening or closing the control spool to help the smooth lifting arm operation.

▶ CONTROL SENSITIVITY ADJUSTMENT:

The opening timing of the spool (1) can be adjusted by adjusting the position of the spool with unscrewing the lock nut (5) and then adjusting the bolt (6). It means that the sensitivity of the control spool can be adjusted.

Refer to “Measurement and adjustment” in this chapter for detailed information.

▶ SAFETY VALVE:

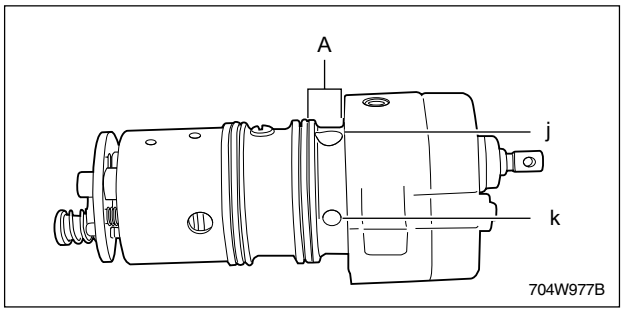

The section (A) in the figure is the chamber that supplies the cylinder with oil. The hole (j) in the sectional view is connected to the hole (k) which is connected to the safety valve.

If the hydraulic lifting arm is applied with abnormal impact or excessive load, the MLS valve can be damaged. However, the hydraulic fluid in the lifting cylinder is drawn to the (k) port through the port (j) by the outer force. Then, it opens the safety valve, which is set to 200 kgf/cm^2, is drained to the outside.

2.9 LINK MECHANISM OF LIFT CYLINDER

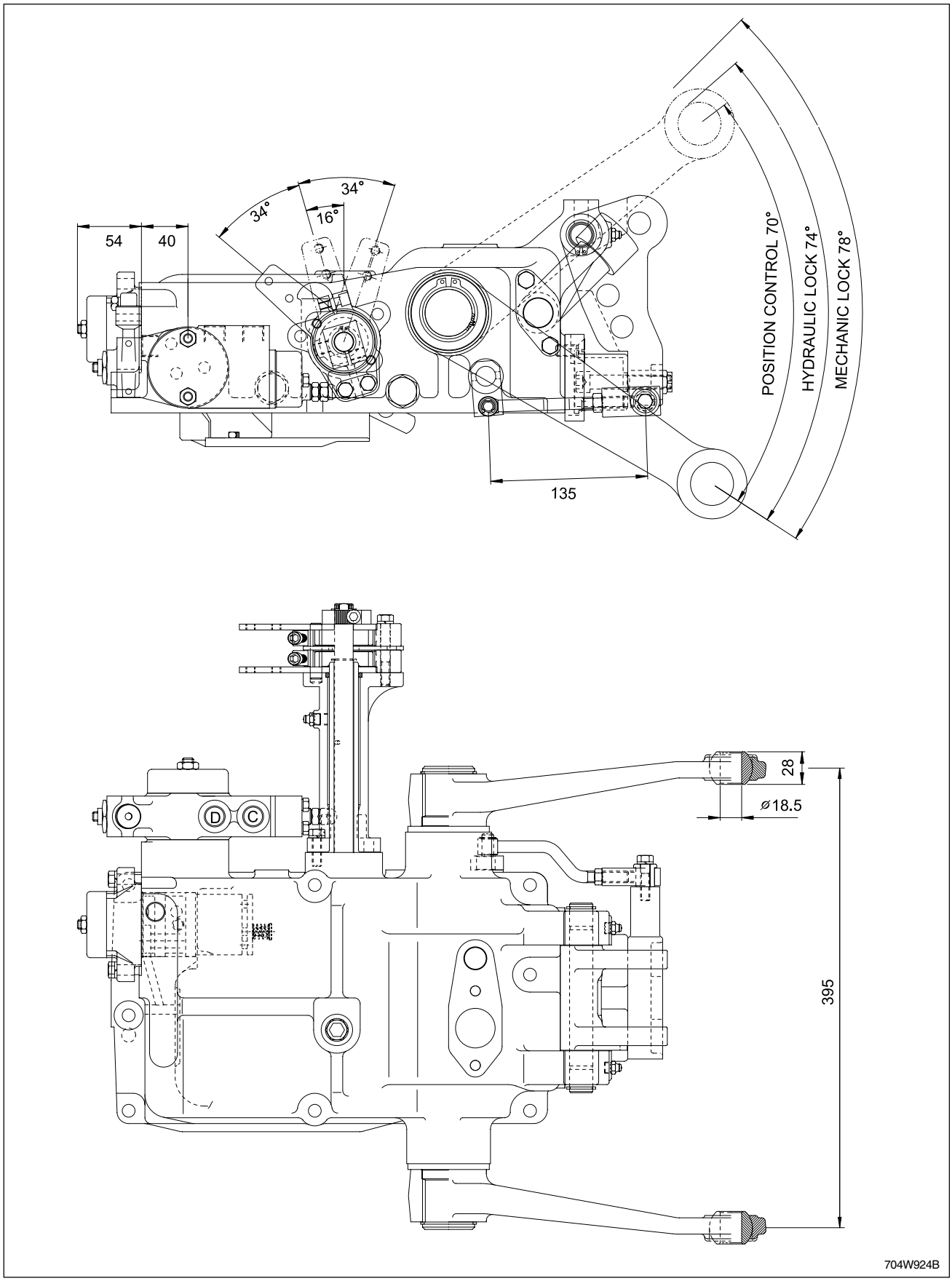

2.9.1 POSITION CONTROL

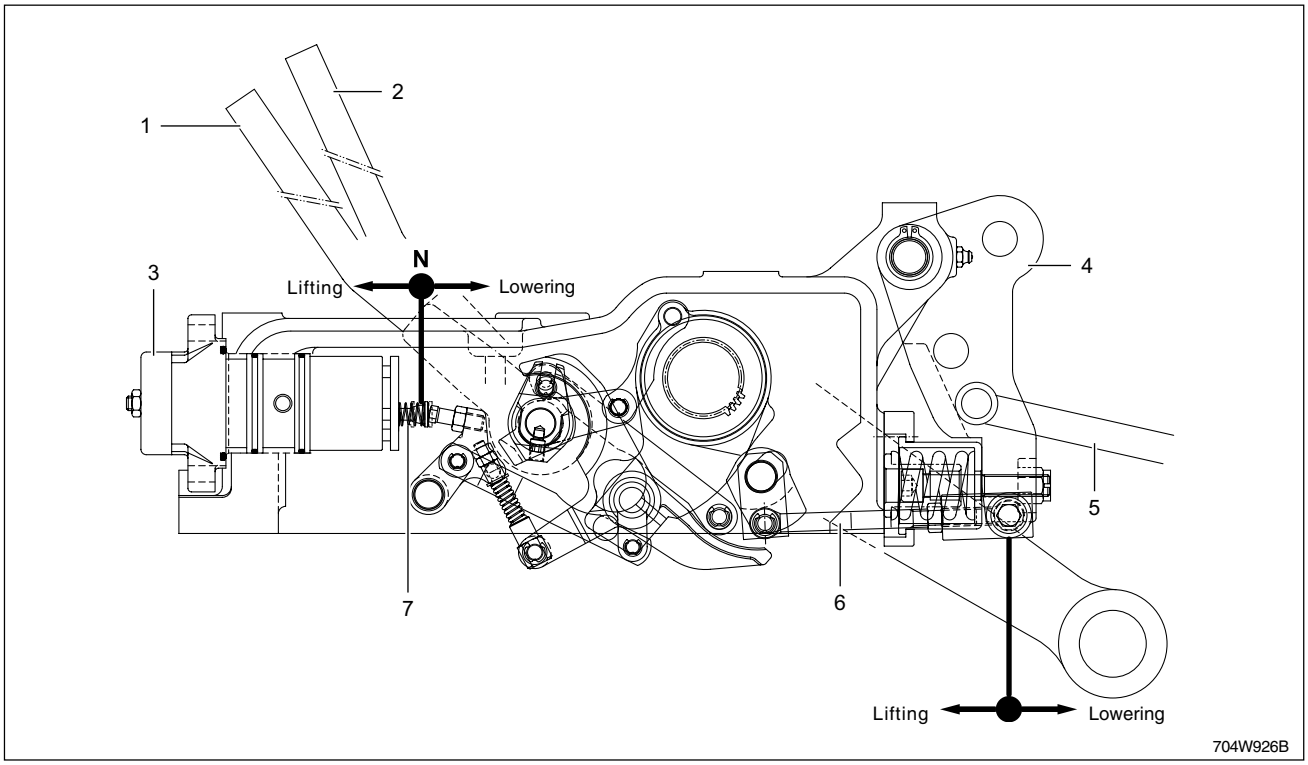

(1) Position Control Lever
(2) Draft Control Lever
(3) MLS Valve
(4) Top Link Bracket
(5) Top Link
(6) Draft Sensing Rod
(7) Spool

The lifting cylinder has not only the MLS valve, cylinder and piston, but also a very complex mechanical link structure. The operating principle of this mechanical link structure is hard to understand only by the figures and the diagrams. Checking the actual components visually and operating them are the best way to understand it.

However, the goal of this complex link structure is very simple.

During the driver is moving the control lever (1) (position control lever), the power is transferred through the link structure to move the MLS valve spool (7) to the lifting or lowering position. However, when the driver stops to move the lever, the spool (7) returns to the neutral position to stop the 3-point hitch.

NOTE:

- *When the MLS valve is not installed to the hydraulic cylinder, the spool is completely extracted and the valve is in the lowering position. When the MLS valve is installed, the valve is in the neutral position due to the initial load applied by the link structure. If the valve is not in the neutral position after installing it, the link structure is incorrectly adjusted or the MLS valve is defected. (Refer to "Measurement and adjustment".)*

2.9.2 DRAFT CONTROL (IF EQUIPPED)

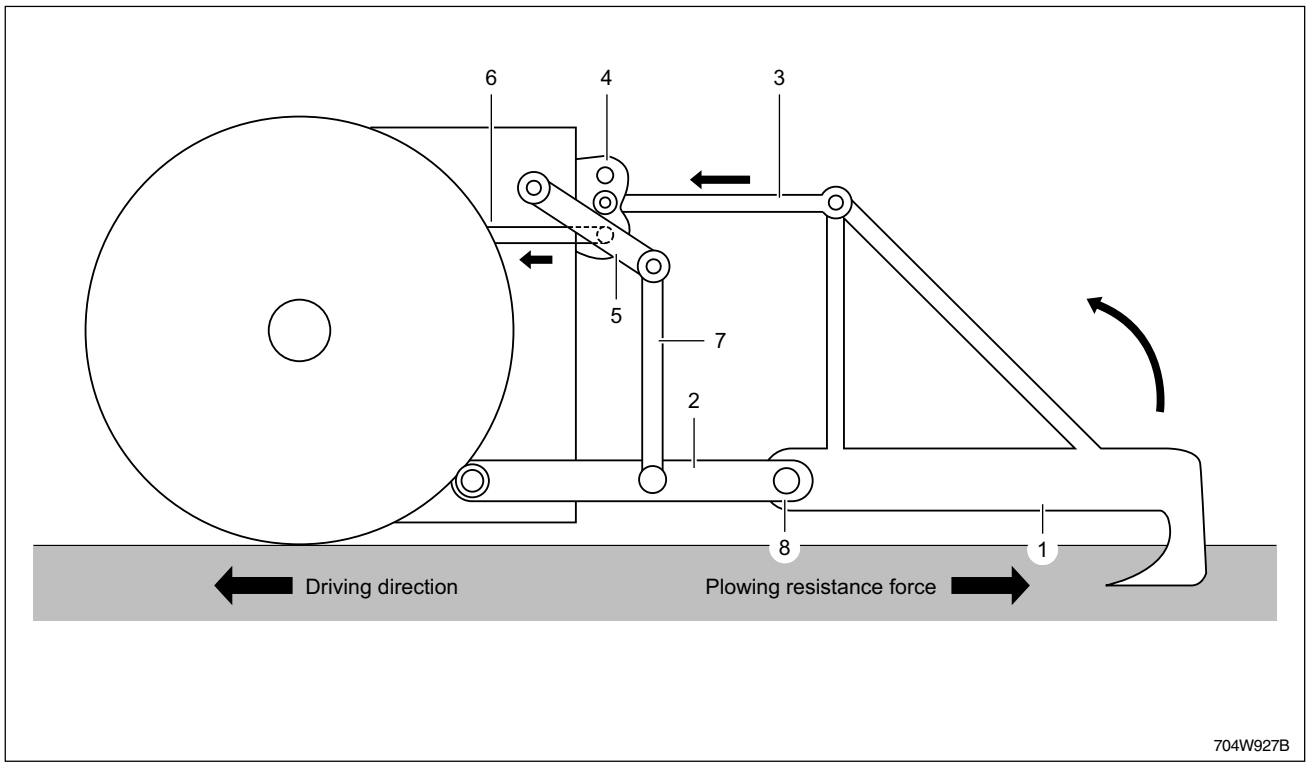

(1) Plow
(2) Lower Link
(3) Top Link
(4) Top Link Bracket
(5) Lift Arm
(6) Draft Rod
(7) Lift Rod
(8) Hinge Point

The plow is the implement that has the closest relationship with the draft function.

It is not easy to keep the plowing depth while plowing.

If the overload is applied to the plow due to the excessively deep plowing depth, the draft automatically lifts the 3-point hitch to operate the plow with less load.

If the plow (1) is stuck too deep in the field and the excessive plowing load is applied to the lower link (2), the plow (1) tries to turn counterclockwise around the hinge point (8) of the lower link (2). This rotating force is transferred through the top link (3) and compresses the top link bracket (4) to the arrow direction.

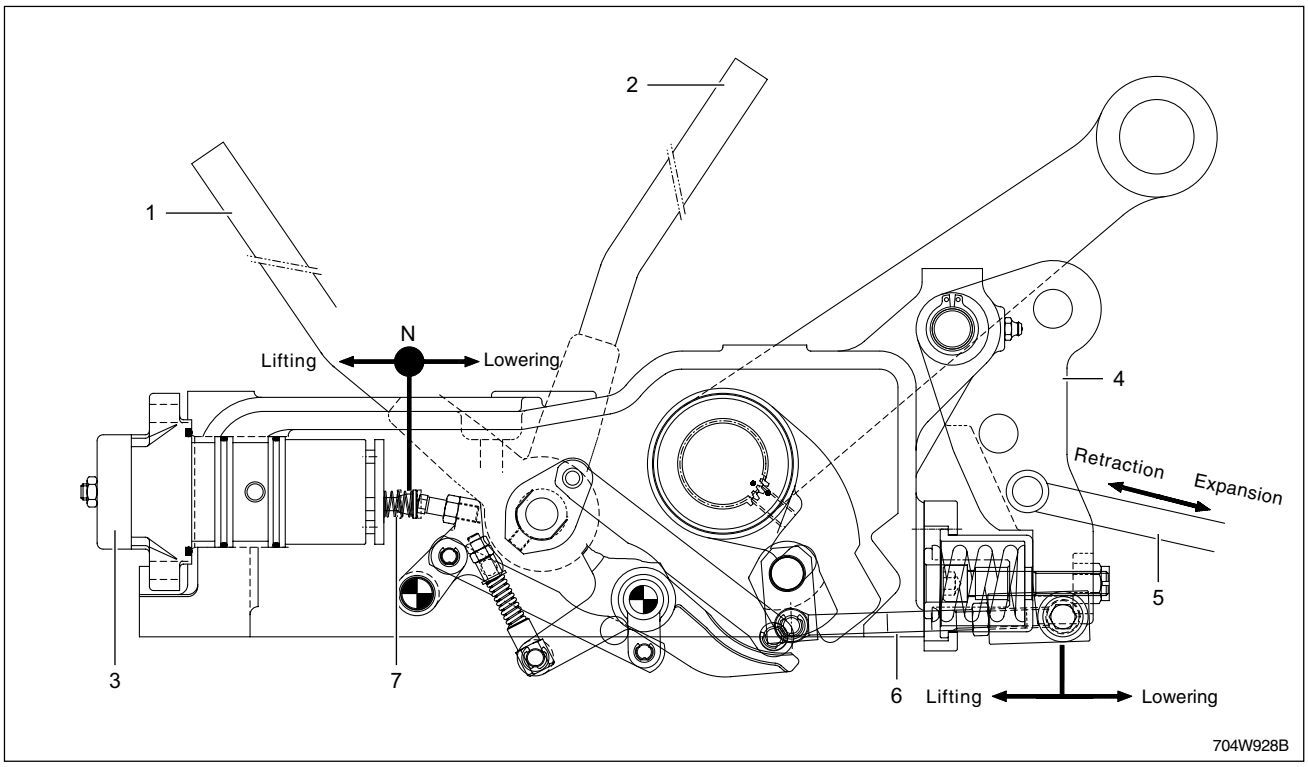

(1) Position Control Lever
(2) Draft Control Lever
(3) MLS Valve
(4) Top Link Bracket
(5) Top Link
(6) Draft Rod
(7) Spool

This compression force moves the top link bracket (4) and then the movement of top link bracket is transferred to the link in the hydraulic cylinder through the draft rod (6). Eventually, this force compresses the spool (7) of the MLS valve (3) to lift the 3-point hitch. In other words, as the plowing load is raised or lowered, the position of the 3-point hitch is automatically raised or lowered to operate the plow moderately.

NOTE:

- *The sensitivity of the draft function varies depending on which hole is used by the top link bracket.*

  Upper hole: Draft function is not available

  Intermediate hole: Low sensitivity

  Lower hole: High sensitivity

The draft control lever is to adjust the sensitivity of the draft function. When it is set to the high sensitivity (shallow), the 3-point hitch is raised even with low plowing load to keep the plowing depth shallow. When it is set to the low sensitivity (deep), the draft function is activated only with high plowing load to keep the plowing depth deep.

3. TROUBLESHOOTING

3.1 POWER LIFT ASSEMBLY

Symptom	Provable Causes	Solution
The rockshaft lifts jerkily.	• Insufficient oil level in the tank. • Pump inlet filter clogged. • Infiltration of air into the pump inlet pipe.	Top up the level. Clean or replace the filter. Check the inlet pipe and any coupling and gasket.
Rockshaft does not operate.	• Adjusting piston or pilot valve stuck.	Remove the control valve and unblock the pilot valve and adjusting piston
The rockshaft does not descend over its entire travel.	• Sensibility adjusted badly • Faulty adjustment of the control lever	Adjust sensitivity of Control Valve Adjust control position lever
The rockshaft does not descend.	• Hydraulic block switched on. • Outlet valve spring damaged. • Piston Blocked	Unscrew the manual lever Change the spring Check piston and cylinder
Lifting capacity does not match that prescribed.	• Safety and main relief valves out of calibration • Poor pump efficiency. • Poor Control Valve efficiency • Deterioration of the Control Valve seal rings.	Control calibration of the 2 valves. Replace the pump. Overhaul the Control Valve. Remove the Control Valve and replace the external seal rings.
The rockshaft supports loads with difficulty; there is a rhythmic oscillation when the motor is on; the load descends when the motor is off.	• Piston gasket worn. • Oil leakage from cylinder. • Oil leakage from one of the following Control Valves valves: non-return valve, outlet valve, safety valve, protecting the cylinder.	Replace the gasket. Overhaul the cylinder. Remove the Control Valve and overhaul the following valves: In case of leakage overhaul the Control Valve.
When the arms are in the upper position, the safety valve (relief valve) placed on the body of the rockshaft starts operating	• Faulty adjustment of the max. Upper position of lift arms.	Adjust the control lever, limiting the max. upper position travel.

3.2 JOYSTICK VALVE

Symptom	Provable Causes	Solution
External leakage control kit or opposite side.	• Worn spool seal due to mechanical actuation or high back pressure.	Locate the leakage and replace the seal. Check back pressure level.
Excessive internal leakage on A and B ports.	• Increase clearance between spools and body due to high wear	Replace the direction control valve and check the oil contamination level.
Dropping load during transition while raising.	• High leakage of the load check valve.	Remove the load check valve and clean the seat.
Inability to build pressure on A and B ports.	• Main pressure relief valve blocked open.	Remove and clean or replace the main relief valve.
	• Low pump pressure and flow.	Check the pump and circuit.

4. SERVICING

4.1 HYDRAULIC PUMP

1. Remove the hoses assembly (P) (1), hose band (2) and hose assembly (T) (3).
2. Remove the joint bolt (4), bolts and O-rings.
3. Remove the bolts (5), hose bands (6), suction tube 3 (7) and O-ring.
4. Remove the bolts, Hydaulic tube (8) and O-ring.
5. Remove the bolts and pump (9).

(When reassembling)

Item	Tightening torque
Joint bolt	44.1 Nm 4.5 kgf-m 32.5 lb-ft

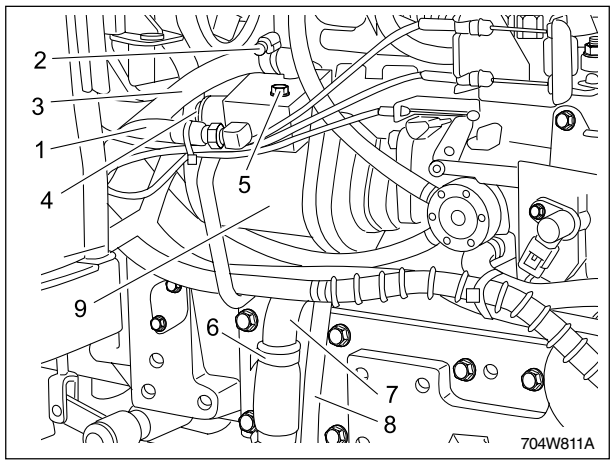

(1) Steering Hose Assembly (P)
(2) Hose Band
(3) Steering Hose Assembly (T)
(4) Joint Bolt
(5) Bolt
(6) Pipe Bands
(7) Suction Tube 3
(8) Hydaulic Tube
(9) Pump

4.2 JOY-STICK VALVE

4.2.1 REMOVING THE JOY-STICK VALVE

1. Remove the hydraulic tube (J1) (4), joint bolt (5), O-ring (6), return tube (J) (7), joint bolt (8), O-ring (9) and hydraulic tube (J2) (10).
2. Remove the bolts (1), Spring washers (2), and plain washers (3).
3. Remove the bolts (11), Spring washers (12) and the valve (13).

(When reassembling)

Item	Tightening torque
Joint bolt	44.1 Nm 4.5 kgf-m 32.5 lb-ft

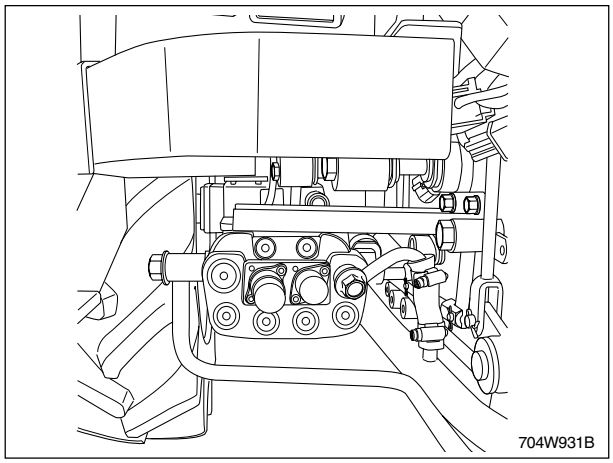

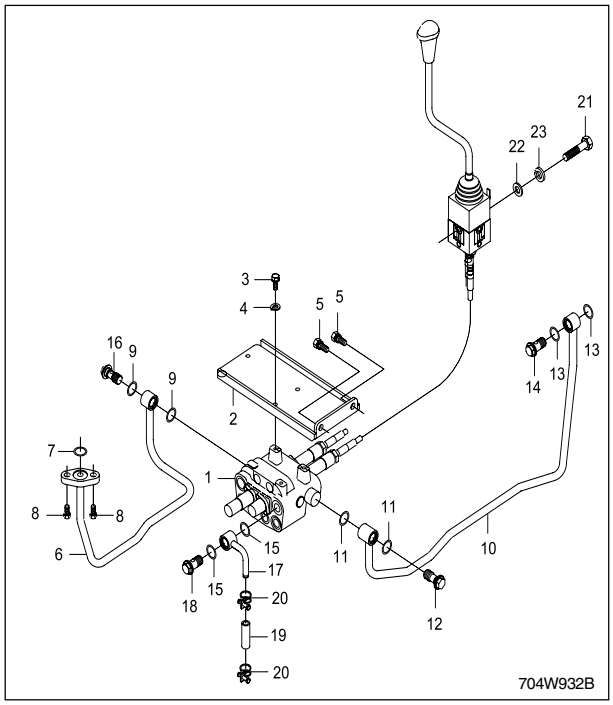

(1) Joystick Valve Assembly
(2) Bracket
(3) Valve Stopper Bolt
(4) Spring Washer
(5) Bolt
(6) Hydraulic Tube (J1)
(7) O-ring
(8) Bolt
(9) O-ring
(10) Hydraulic Tube
(11) O-ring
(12) Joint Bolt
(13) O-ring
(14) Joint Bolt
(15) O-ring
(16) Joint Bolt
(17) Return Tube(J)
(18) Joint Bolt
(19) Hose
(20) Clamp
(21) Bolt
(22) Spring Washer
(23) Plain Washer

4.2.2 DISASSEMBLING THE JOY-STICK VALVE

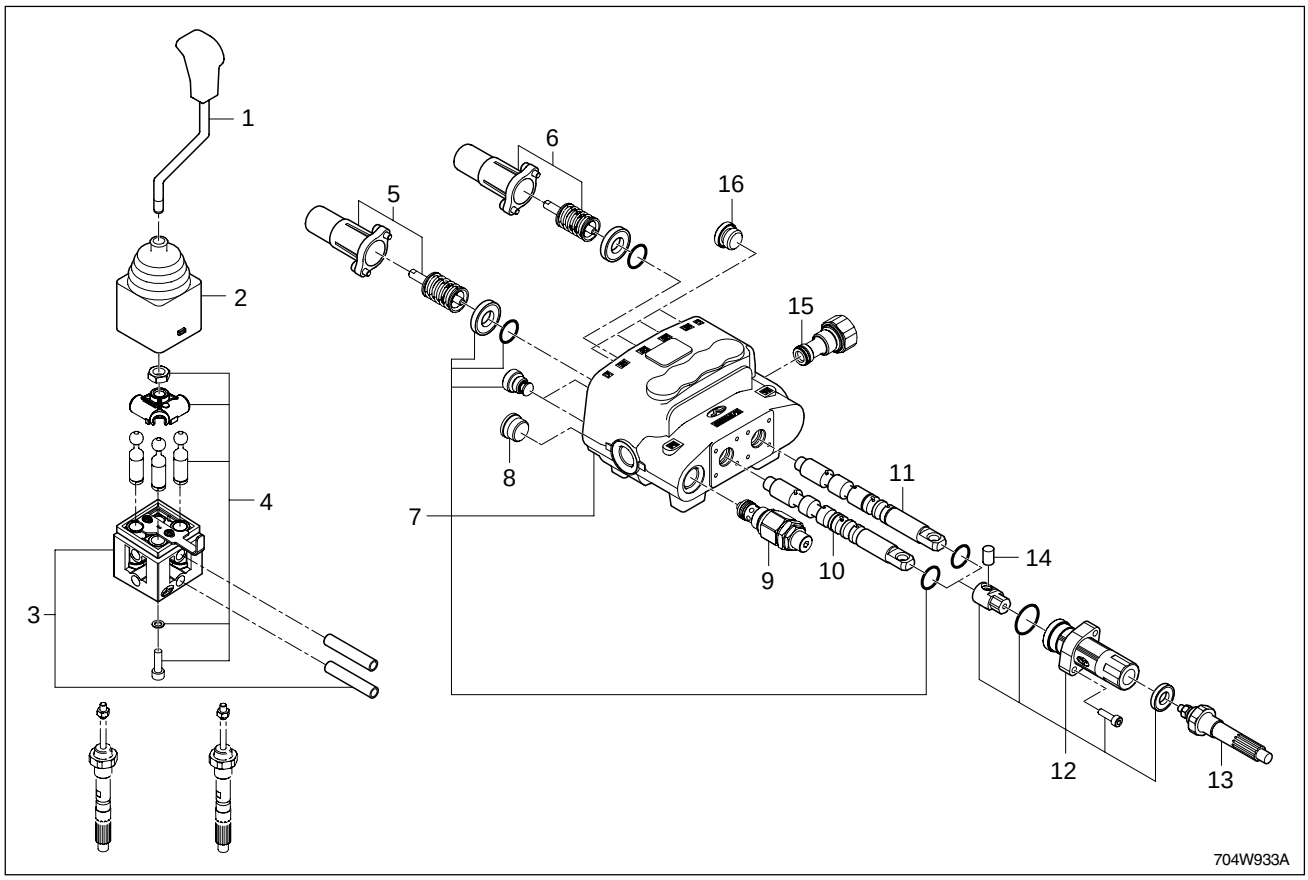

(1) Handle
(2) Rubber, Bellow
(3) Body Ass'y
(4) Mechanical Joystick Lcb Ass'y
(5) Spool Positioner
(6) Spool Positioner
(7) Body Ass'y
(8) Plug
(9) Valve, Relief
(10) Spool
(11) Spool
(12) Cable Remote Cap Ass'y
(13) Cable
(14) Pin
(15) Plug
(16) Plug

1. Loosen the nuts from cable (13) and remove the screws (12), rod pins (14) and cables (13).
2. Remove End cap screws, then End cap (5) from the float spool (10).
3. Remove end cap screws and End cap (6) from the spool (11).
4. Gently slide each float spool (10) with the spool control kit, Ring and O-ring out of the valve body.

IMPORTANT

- ***The float spool (10) and spool (11) are not interchangeable and will only work in their respective bores.***

  Ensure that the spools are inserted into the proper bores during reassembly.

5. Disassemble the spool (11) in the same manner as the float spool using steps 1 through 4.
6. Remove the load check plugs (8) with the O-rings, springs, and load check poppets from the check valve ports.

A. INSPECTION:

1. Inspect the spools and the spool bores for pitting, scratching, or excess wear. If they are found defective, replace the Joy-stick valve assembly.
2. Check that the spool moves freely in the spool bore.
3. Inspect the load check valve poppets for pitting or scratches.
4. Inspect all springs for distortion. Replace those found to be defective
5. Replace all O-rings and seals during reassembly and lightly lubricate with petroleum jelly.

4.2.3 JOY-STICK VALVE ASSEMBLY

1. Install the relief valve (9).

Item	Tightening torque
Plug	42 Nm 4.3 kgf-m 31 lb-ft
Nut	24 Nm 2.5 kgf-m 18.0 lb-ft

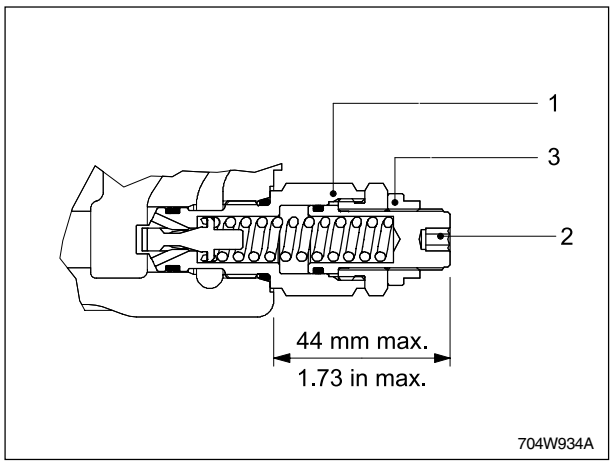

(1) Plug (3) Nut
(2) Screw

2. Install the load check poppets with O-rings, springs and check plugs (15).

Item	Tightening torque
Check plugs	42 Nm 4.3 kgf-m 31 lb-ft

3. Install O-ring into the grooves in the valve body and carefully slide the spool (11) into its bore.

4. Install the end cap (5) and secure the assembly with cap screws.

Item	Tightening torque
End cap mounting wrench bolt	6.6 Nm 0.7 kgf-m 4.9 lb-ft
Spool control kit	9.8 Nm 1.0 kgf-m 7.2 lb-ft

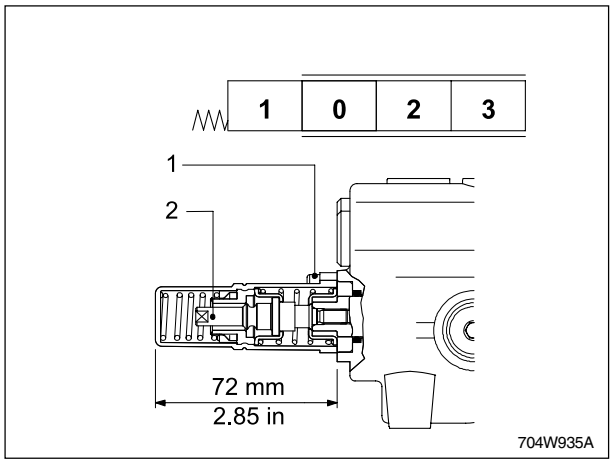

(1) Wrench Bolt (2) Spool Control Kit

5. Assemble the float spool (10) in the same manner using steps 3 through 4.

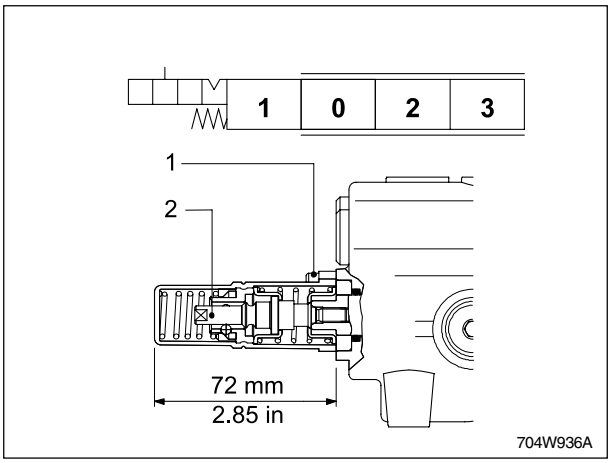

(1) Wrench Bolt (2) Spool Control Kit

6. Install the cables (13), rod pins (14) and screws into the assembly and tighten its locknut.

Item	Tightening torque
Wrench bolt	6.6 Nm 0.7 kgf-m 4.9 lb-ft

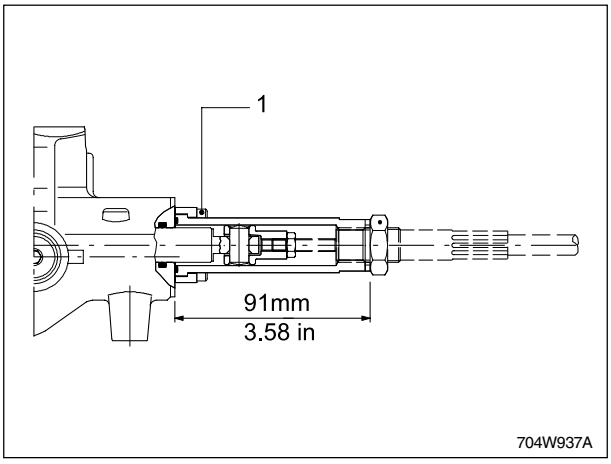

(1) Wrench Bolt

4.3 SEPARATING THE HYDRAULIC CYLINDER

4.3.1 ROPS

1. Remove the lock pin, linch pin, and rops from the rops support.
2. Remove the bolts and ROPS supports (LH, RH).

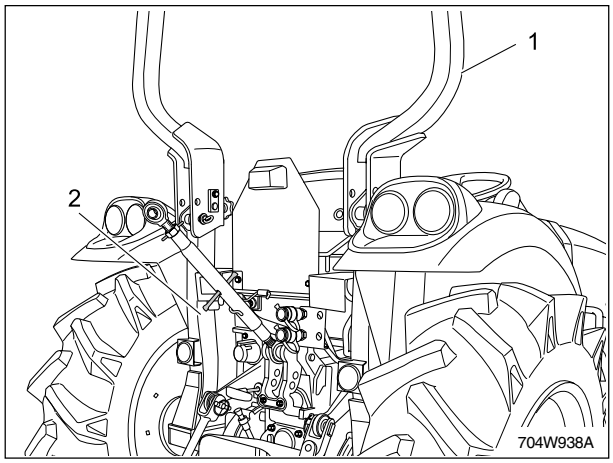

(1) ROPS
(2) ROPS Support

4.3.2 SEAT, LEVERS

1. Raise the frame assembly with nylon rope and remove the mounting bolts in the seat floor.
2. Remove the seat assembly.
3. Remove the grips of Hi-Lo shift lever, PTO lever and others.
4. Remove the bolts and the lever guides (LH, RH).
5. Remove the bolt, lever bracket and lever guide plates.
6. Disconnect the position lever, draft lever, and external hydraulic valve levers.

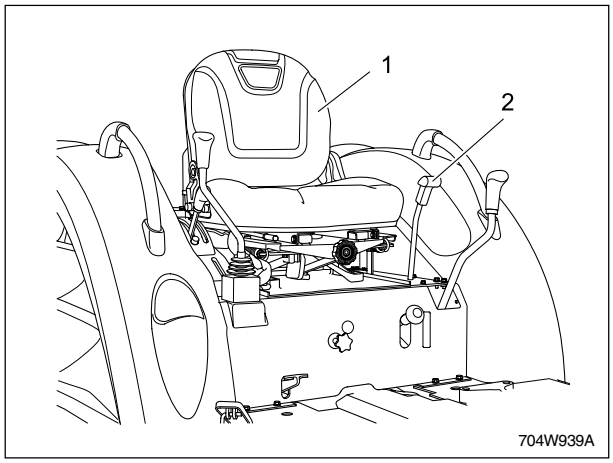

(1) Seat
(2) Hi-Lo Shift Lever
(3) PTO Lever

4.3.3 FENDER

1. Disconnect the brake lamp wire connector and then remove from fender.
2. Disconnect the wiring connectors for the work lamp, back lamp.
3. Raise the frame assy. with nylon rope. Remove the mounting bolts in the seat floor and front cover.
4. Remove the fender.

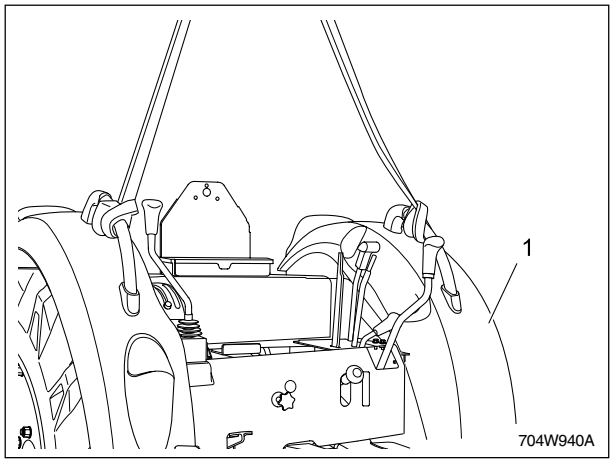

(1) Fender

4.3.4 FRONT COVER, STEP

1. Remove the pin and then remove the main shift lever.
2. Remove the grip of front wheel drive lever.
3. Remove the snap ring and pin in the down speed control rod and then remove the down speed control rod.
4. Disconnect the differential lock pedal rod.
5. Remove the joystick lever and front cover mounting bolts.
6. Remove the front cover and step mounting bolts.
7. Remove the step (LH, RH) and support bracket mounting bolts.

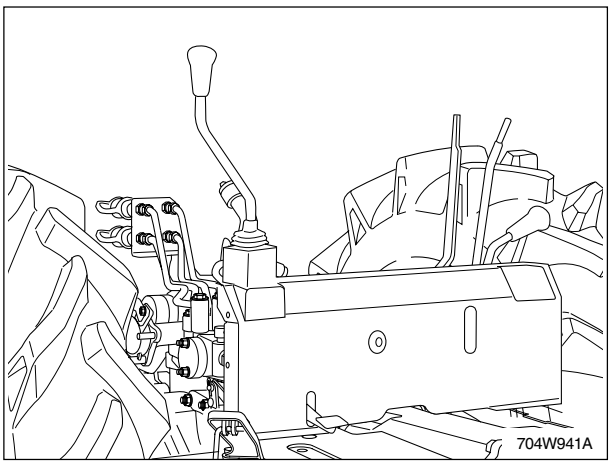

4.3.5 LINKS

1. Remove the clip pin, top link pin and the top link.
2. Remove the clip pin, lift rod pin and lifts.
3. Remove the mounting bolts and top link holder.

Sect.	Spec.	Tightening torque
Top link holder and mounting bolt	M12	77.5 ~ 90.2 Nm 7.9 ~ 9.2 kgf-m 57.2 ~ 66.5 lbf-ft
	M10	48.1 ~ 55.8 Nm 4.9 ~ 5.7 kgf-m 35.5 ~ 41.2 lbf-ft

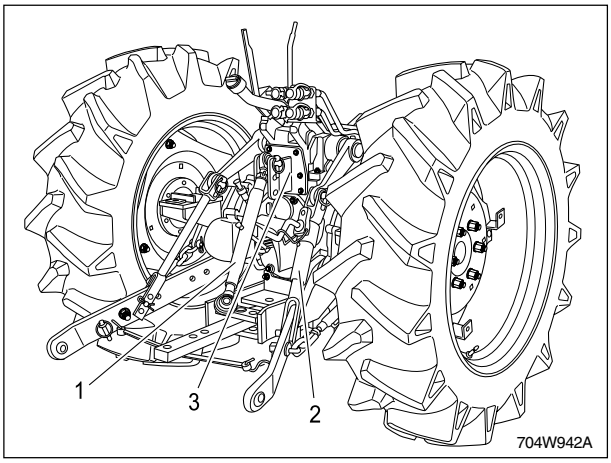

(1) Top Link
(2) Lift Rod
(3) Top Link Holder

4.3.6 TUBE, AUX. CONTROL VALVE (IF ATTACHED)

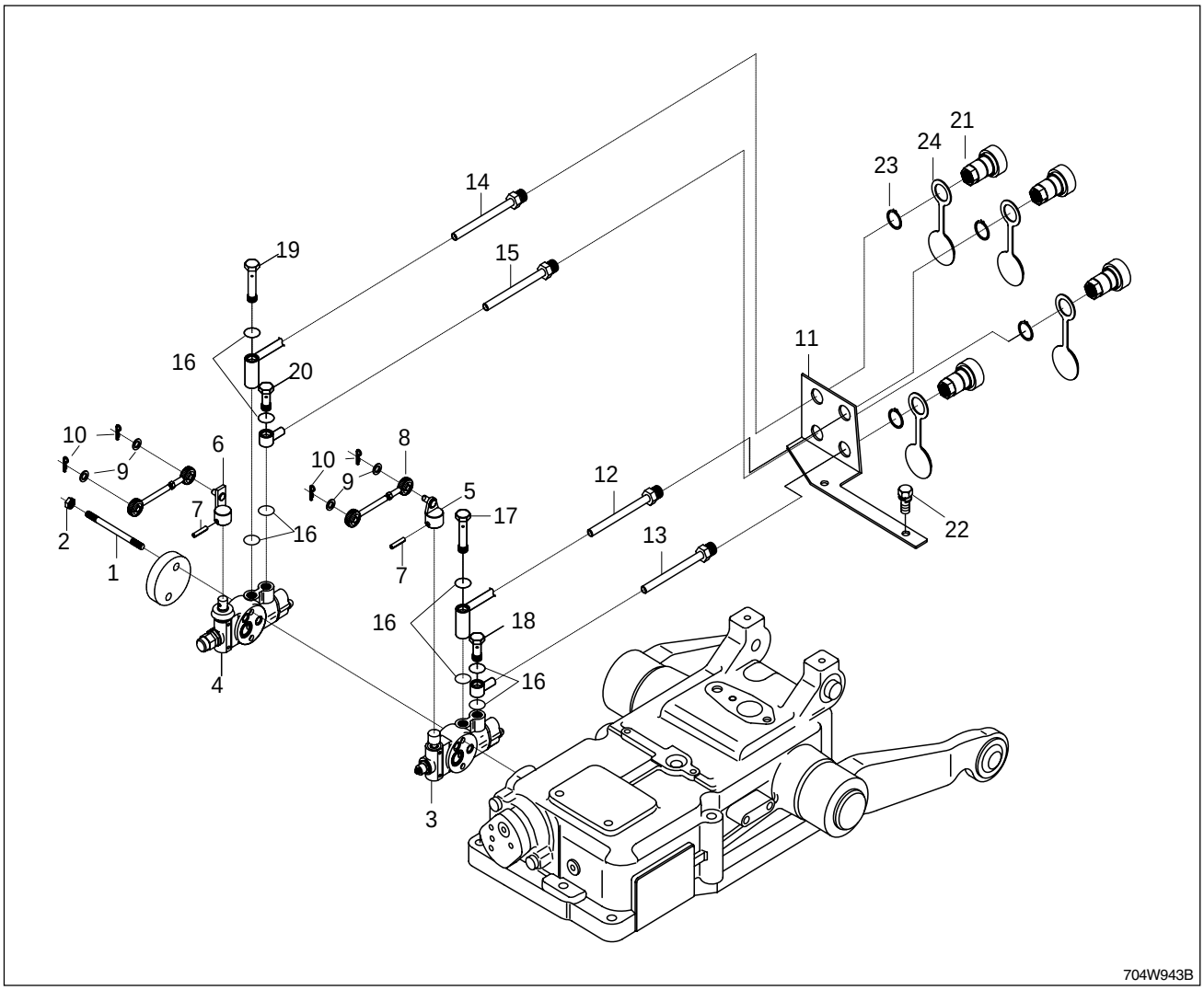

(1) Stud
(2) Nut
(3) Double Acting Valve Assy
(4) Detent Floating Valve Assy
(5) Double Acting Lever
(6) Double Acting Lever
(7) Spring Pin
(8) Rod
(9) Plain Washer
(10) Snap Pin
(11) Socket Support
(12) Hydraulic Tube(A)
(13) Hydraulic Tube(B)
(14) Hydraulic Tube(C)
(15) Hydraulic Tube(D)
(16) O ring
(17) Joint Bolt
(18) Joint Bolt
(19) Joint Bolt
(20) Joint Bolt
(21) Coupler Socket Assy
(22) Bolt
(23) Cir-Clip
(24) Cover

1. Remove the joint bolt (17, 18, 19, 20), hydraulic tube (12, 13, 14, 15), socket support (11) and quick coupler(21).
2. Remove the nut (2) from aux. control valve and then remove the aux. control valve from the hydraulic cylinder body.

(When reassembling)

- Make sure the O-ring is not damage.

Item	Tightening torque
Joint bolts	34.3 ~ 39.2 Nm 3.5 ~ 4.0 kgf-m 25.3 ~ 28.9 lb-ft

4.3.7 HYDRAULIC CYLINDER

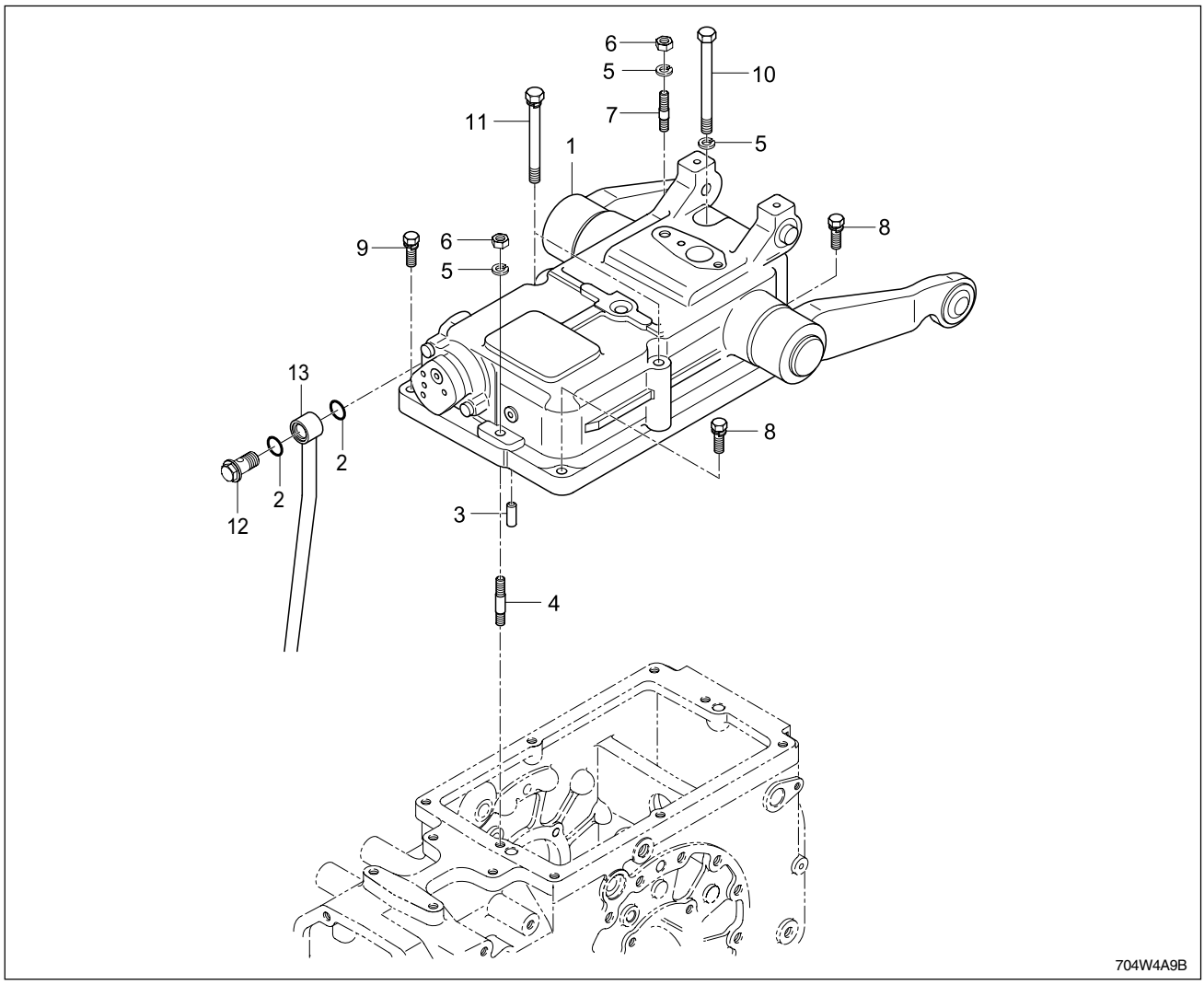

(1) Hydraulic Cylinder Assembly
(2) O-ring
(3) Straight Pin
(4) Stud
(5) Spring Washer
(6) Nut
(7) Stud
(8) Bolt
(9) Bolt
(10) Bolt
(11) Bolt
(12) Joint Bolt
(13) Hydraulic Tube (J2)

1. Remove the joint bolt (12) and O-rings (14).
2. Remove the hydraulic cylinder assembly mounting bolts (8,9,10,11), spring washers (5) and nuts (6).
3. Separate the hydraulic cylinder assembly (1) from the transmission case.

(When reassembling)

- Apply liquid gasket. (Three band 1206D or equivalent)

Item	Tightening torque
Hydraulic cylinder mounting bolt and nut	48.1 ~ 55.8 Nm 4.9 ~ 5.7 kgf-m 35.5 ~ 41.2 lb-ft
Joint bolts	29.4 ~ 34.3 Nm 3.0 ~ 3.5 kgf-m 21.7 ~ 25.3 lb-ft

4.3.8 DISASSEMBLING THE HYDRAULIC CYLINDER

A. HYDRAULIC CONTROL LEVER

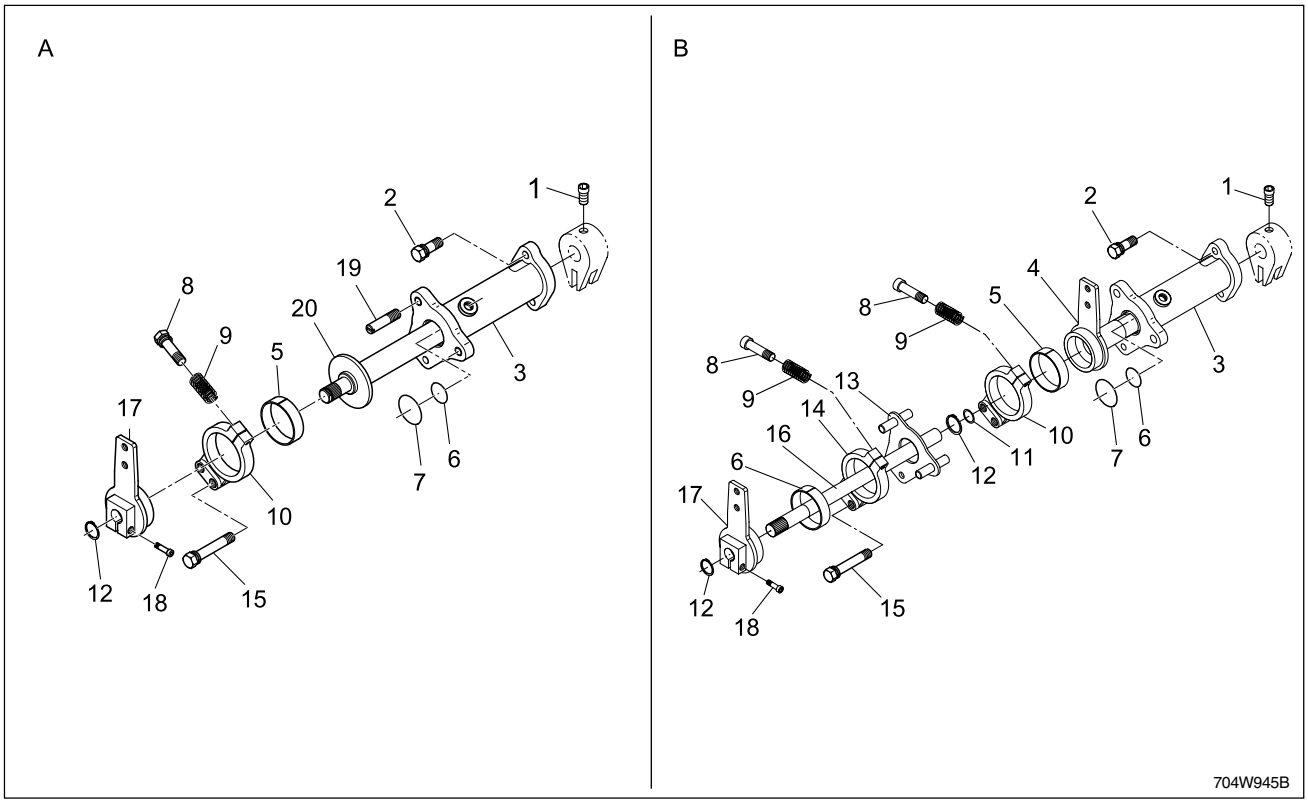

(A) Only Position Control

(B) If Draft Control Equipped

(1) Set Screw
(2) Bolt
(3) Hydraulic Lever Support
(4) Pitmans Arm
(5) Clutch
(6) O-ring
(7) O-ring
(8) Screw
(9) Spring
(10) Clutch Hub 1
(11) O-ring
(12) Snap Ring
(13) Flange
(14) Clutch Hub 2
(15) Bolt
(16) Shaft
(17) Control Lever
(18) Bolt
(19) Stopper
(20) Shaft

1. Remove the screw (1) and bolts (2) for mount the hydraulic lever support.
2. Remove the relevant parts as shown in the figure.

B. LIFT ARM, HYDRAULIC CYLINDER ARM, HYDRAULIC ARM SHAFT

1. Loosen the cylinder mounting bolts (21, 23) and hydraulic arm mounting screw (10).
2. Remove the snap ring (1) and detach the hydraulic arm shaft (11) and lift arms, tapping on it using a urethane hammer.
3. Remove the hydraulic cylinder (18), piston (15), hydraulic rod (10) and hydraulic arm (9).

(When Reassembling)

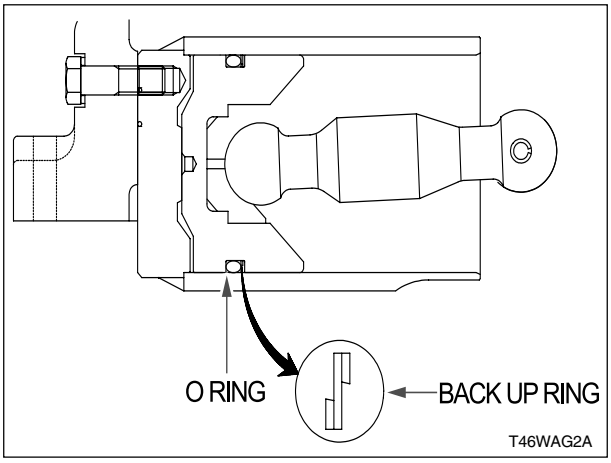

- Take care of backup ring (16) and o-ring (17) insert into piston (15).
- Apply the cylinder with transmission oil and insert the piston.
- Apply the bottom of the piston that contact with the hydraulic rod with grease.
- Alive with holes of shaft (11) and hydraulic arm (9)
- Apply grease to the right and left bushings of hydraulic cylinder.
- Properly align the alignment of the hydraulic arm shaft and hydraulic arm (9), and the alignment marks (B) of the hydraulic arm shaft (11) and lift arm (2).

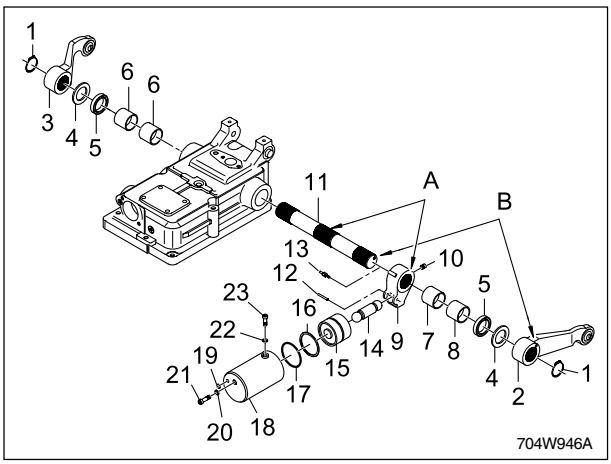

(1) Snap Ring	(14) Hydraulic Rod
(2) Lift Arm (Left)	(15) Piston
(3) Lift Arm (Right)	(16) Back Up Ring
(4) Washer	(17) O-ring
(5) Seal	(18) Cylinder
(6) Bush	(19) O-ring
(7) Bush	(20) Seal Washer
(8) Bush	(21) Bolt
(9) Hydraulic Arm	(22) Seal Washer
(10) Screw	(23) Bolt
(11) Hydraulic Arm Shaft	
(12) Spring Pin	(A) Hold
(13) Pin	(B) Mark

C. TOP LINK (IF EQUIPPED)

▶ DISASSEMBLY

1. Before disassembling the top link holder assembly, disassemble the socket support and coupler socket assembly.
2. Disassemble bolt (12), roller (13), and plate (11).
3. Disassemble nut (19).
4. Remove snap ring (10) and then disassemble pin (9).
5. Disassemble top link bracket (1).
6. Pull out bolt (7), (8), and then disassemble flange (2).
7. Disassemble cover (3), spring (4), roller (5), and bolt (6) in the assembly.

▶ ASSEMBLY

1. Apply bolt (6), and spring (4) with grease sufficiently when assembling.

⚠ *CAUTION*

- ***Don't change the assembled position of plate when disassembling flange (2).***
- ***Make sure top link holder (1) does not fall to ground when disassembling pin (9).***
- ***When assembling bolt (7), check draft for operation and then repeat assembly several times.***

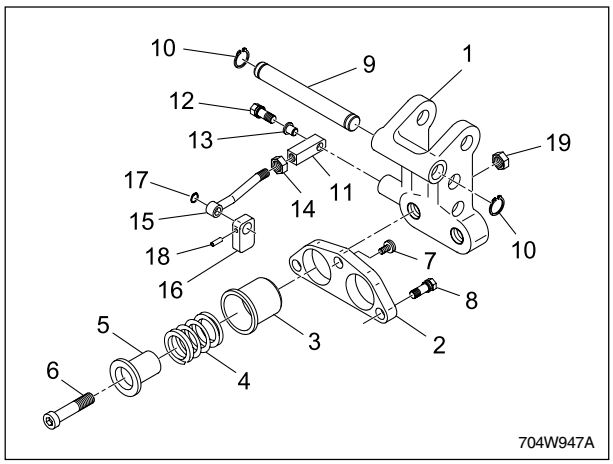

(1) Top Link Holder
(2) Flange
(3) Cover
(4) Spring
(5) Roller
(6) Bolt
(7) Bolt
(8) Bolt
(9) Pin
(10) Snap Ring
(11) Plate
(12) Bolt
(13) Roller
(14) Nut
(15) Tie Rod
(16) Snap Ring
(17) Crank
(18) Pin
(19) Nut

D. CONTROL VALVE (MLS VALVE)

1. REMOVE THE BOLTS (1).
2. DRAW OUT THE CONTROL VALVE (2) FROM THE POWER LIFT BODY (3).

(When reassembling)

NOTE:

- *Installation is carried out in reverse order of removal.*

1. Install new O-rings on body of control (MLS) valve if.
2. Orient control valve so that the mounting holes line up with the appropriate holes in the housing with the shaft and that time the control shaft locate towards the bottom of the housing (See removal story step)
3. Lubricate control valve bore in housing with hydraulic oil and being careful not to damage O-rings, slide shaft control valve into housing. Secure with two bolts.
4. Install hydraulic control rod and U-joint securing with pin.

Item	Tightening torque
Control valve mounting bolt	23.6 ~ 27.4 Nm 2.4 ~ 2.8 kgf-m 17.4 ~ 20.2 lb-ft

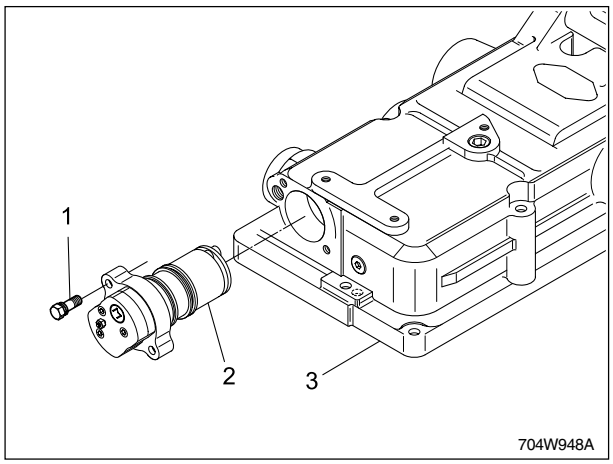

(1) Bolt
(2) Control Valve Assembly (MLS Valve)
(3) Power Lift Body (Hydraulic Cylinder Block)

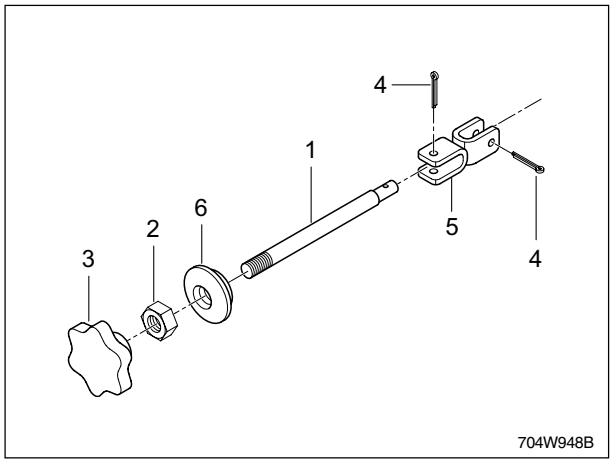

(1) Rod (MLS)
(2) Nut
(3) Knob
(4) Split Pin
(5) U Fixer
(6) Cushion Rubber

4.3.9 CONTROL (MLS) VALVE DISASSEMBLY, ASSEMBLY AND INSPECTION

1. Remove the control valve from the housing (Hydraulic cylinder).
2. Remove the O-rings from outside of the body.

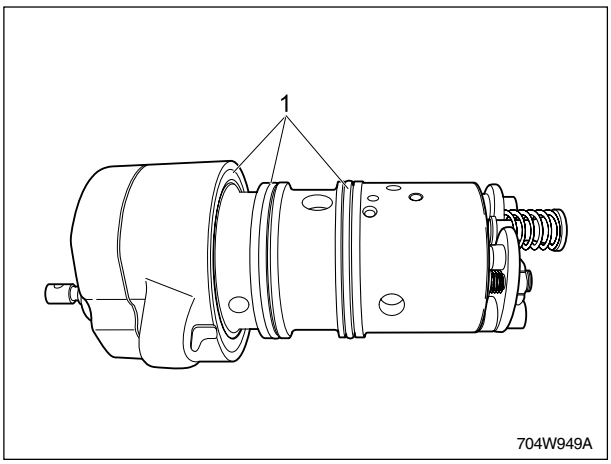

(1) O-ring

3. Remove the rubber boot (3) from speed control shaft
4. Remove three socket head cap screws (2) securing to body of rockshaft control valve.

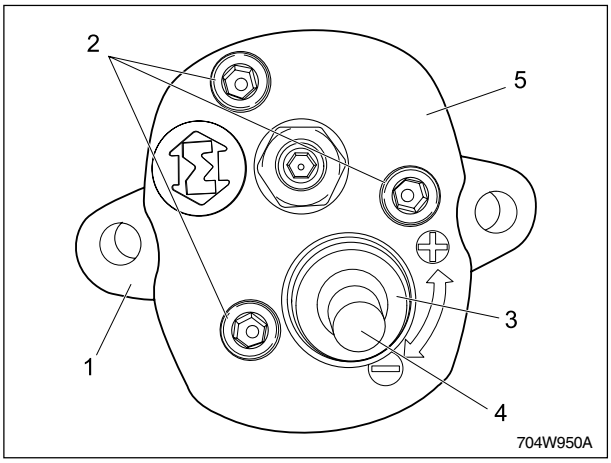

(1) Control Valve Body
(2) Socket Head Cap Screws
(3) Rubber Boot
(4) Speed Control Shaft
(5) Head Cap

5. Remove the spool valve (1) from head end of body (3).
6. Remove the speed control valve (2) from head end of the body.

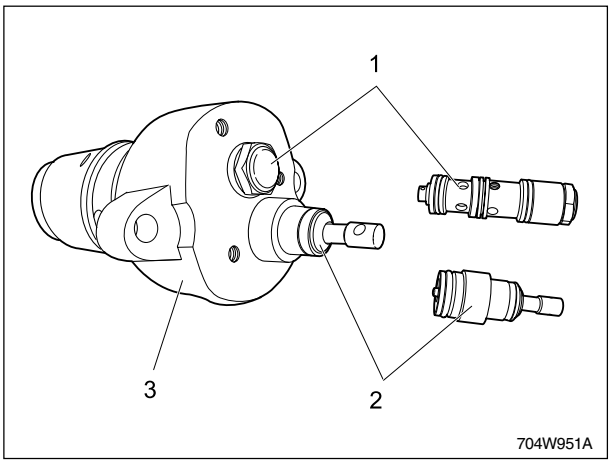

(1) Spool Valve
(2) Speed Control Valve
(3) Body

NOTE:

- *Valves are composed of matched components (spools, springs, body, etc.). If any component shows wear, the entire valve must be replaced.*

NOTE:

- *Orientation of balancing passage in one end of the spool is very important. This balancing passage must be assembled facing towards the cap of spool valve.*

7. Inspect the components for wear. Replace as required.

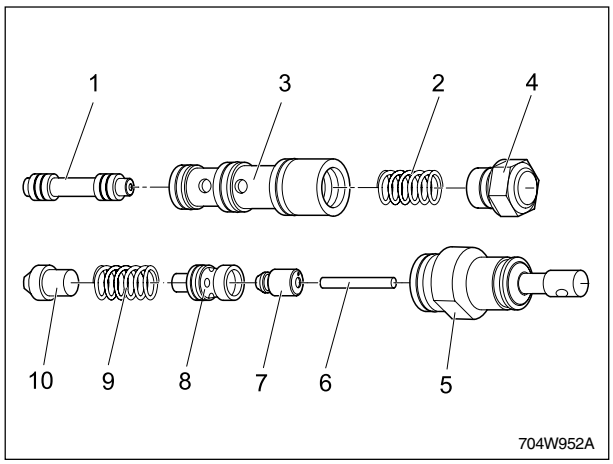

(1) Pilot Spool
(2) Spring
(3) Valve
(4) Plug
(5) Lever Ass'y
(6) Pin
(7) Valve
(8) Seat Valve
(9) Spring
(10) Valve

8. Screw a bolt into the valve located under the speed control valve and remove the valve.
9. Remove the spring and ball under valve.
10. Inspect components for wear paying special attention to valve and seats. Replace as required.

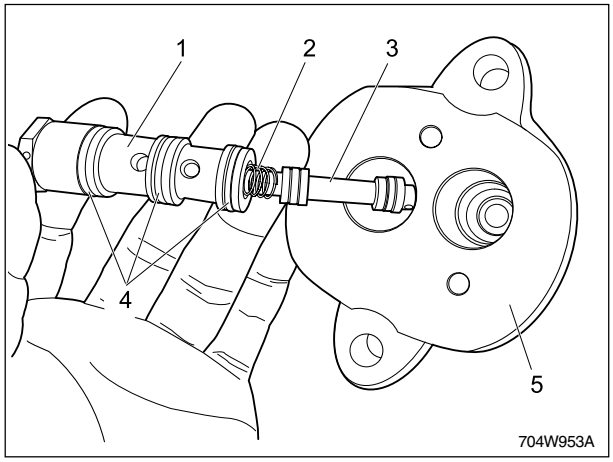

(1) Valve
(2) Spring
(3) Pilot Spool
(4) O-ring
(5) Body

IMPORTANT

- ***The end plate is under tension from valve springs. DO NOT remove the socket head cap screws securing the end plate to the body without retaining the head as indicated in the story.***

  DO NOT disturb the set screw with the lock nut! Removing this screw will change internal relief pressures!

11. Remove the center socket head cap screw. Secure one of the socket head cap screw that were used to secure head to body (longer than plate screw) in the center hole.
12. Place the valve, head end down, on a level surface to reduce the chance of loosing internal components.
13. Back off all three screws evenly until the two outside screws disengage from threads in the body. At this point the spring tension will be relieved to a safe level. Unscrew the center screw and remove.

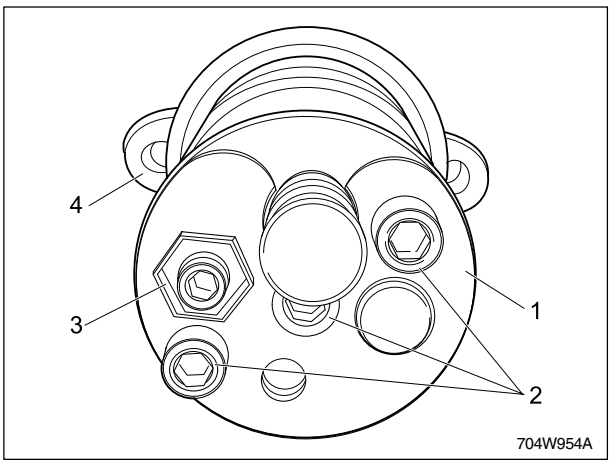

(1) End Plate
(2) Socket Head Cap Screws
(3) Set Screw Lock Nut (4) Body

14. Remove the end plate, spring and valve spool as a unit.
15. Note the location of spacers, plug, piston and spring followers.

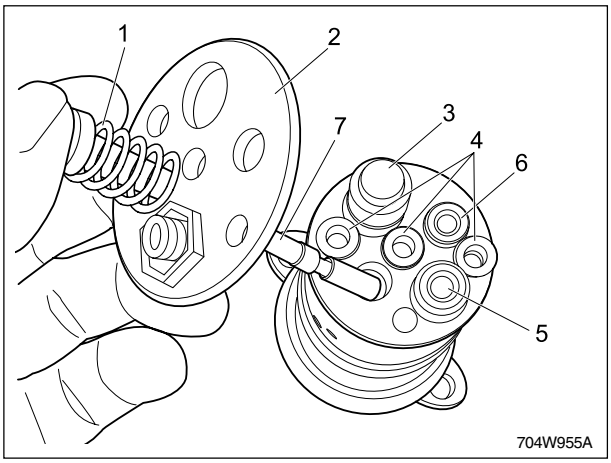

(1) Spring
(2) End Plate
(3) Piston
(4) Spacers
(5) Spring Followers
(6) Valve Seat
(7) Valve Spool

16. Compress the spring until it is free of spring pocket. Remove the spring and valve spool from end plate.

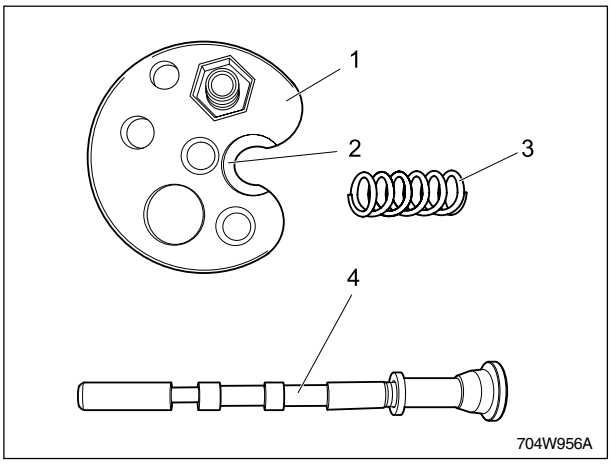

(1) End Plate
(2) Spring Pocket
(3) Spring
(4) Valve Spool

17. Remove the spacers.
18. Remove the spring follower and spring from body.

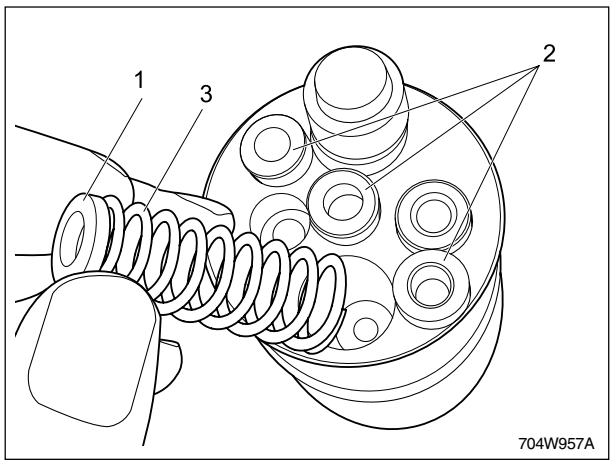

(1) Spring Follower (3) Spring
(2) Spacers

19. Use magnet to remove the ball from body. Also remove the ball seat if it did not come out with the spring.

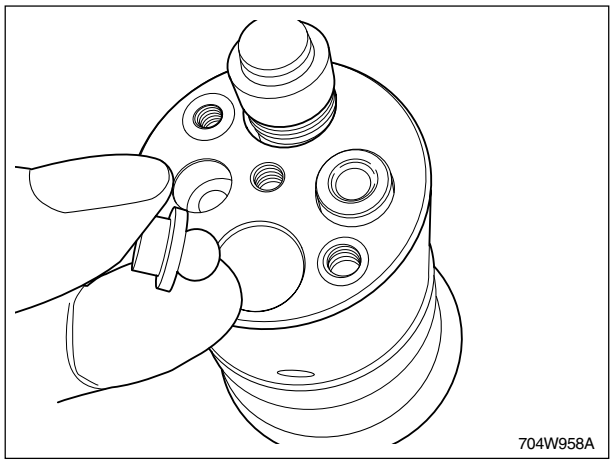

20. Remove the valve seat from the body.

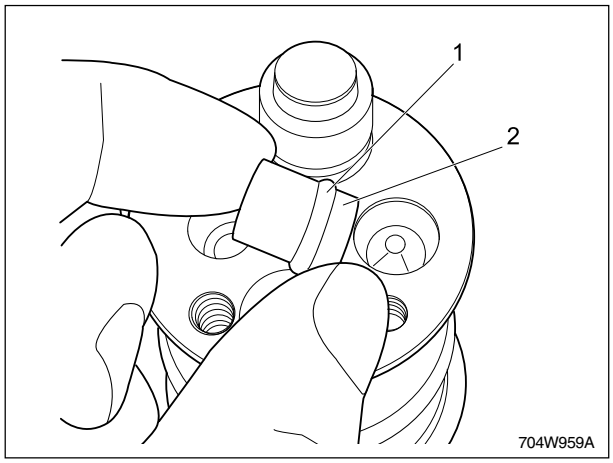

(1) O-ring (2) Valve Seat

21. Remove the pilot valve from body.

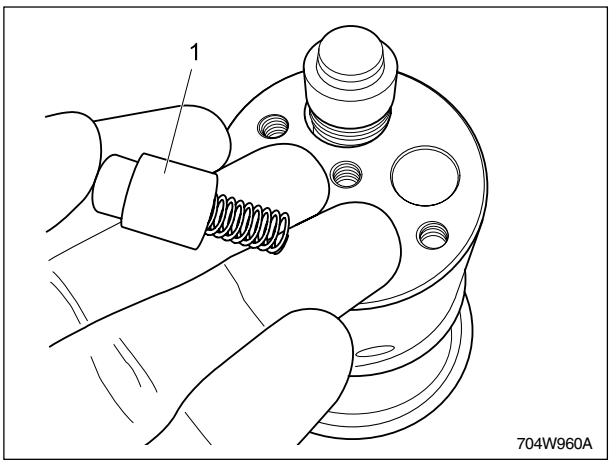

(1) Pilot Valve

22. Remove the plug and the piston spring from the body.
23. Inspect the O-ring on the plug. Replace it if damaged.

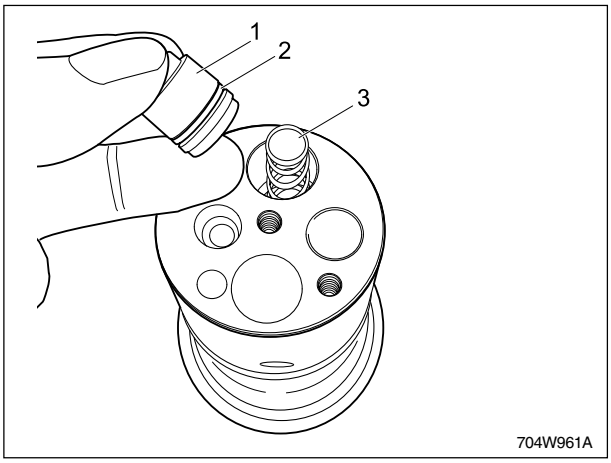

(1) Plug
(2) O-ring
(3) Spring

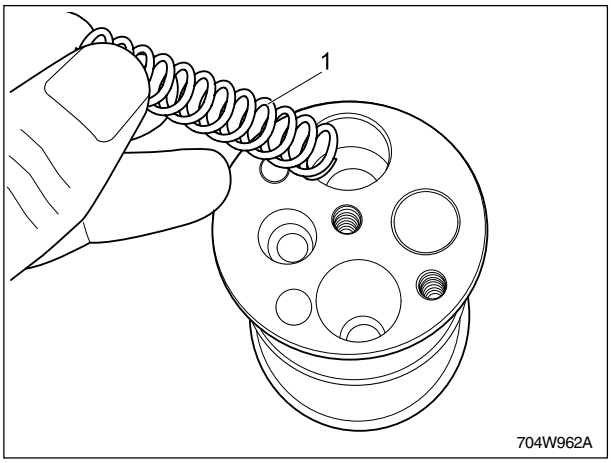

(1) Spring

24. Remove the spool from body.

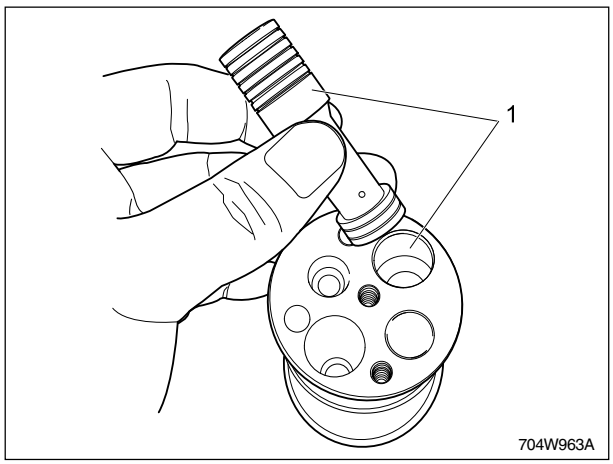

(1) Spool

25. Remove the orifice screw from the side of the body.
26. Make sure the hole in the orifice screw is not plugged or damaged.

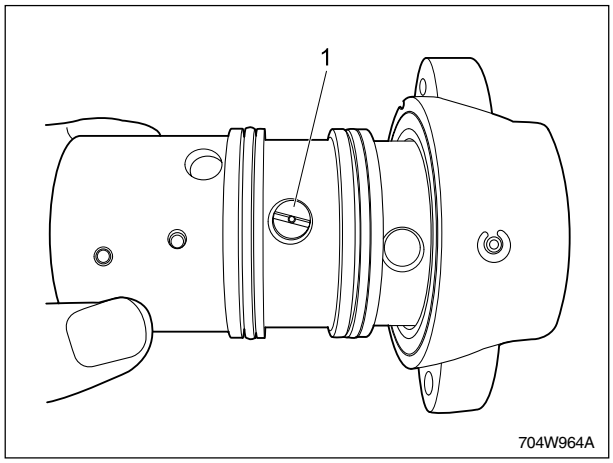

(1) Orifice Screw

IMPORTANT

- ***DO NOT attempt to remove balls used to black drill passages in body.***

27. Clean body and components in suitable solvent. Carefully blow out all passages in the body with compressed air.
28. Inspect the body and all components for wear of damage. Pay special attention to be sure that all ports and small passages are clean and open. Replace as required.

NOTE:

- *Individual components of speed control valve are not serviceable. If the body and/or components are worn or damaged the entire speed control valve must be replaced as a unit.*

Assembly:

NOTE:

- *Assembly is carried out in reverse order of disassembly.*

- Lubricate all components liberally with hydraulic fluid during assembly.
- Always install new O-rings when reassembling components.

- Make sure that the balancing passage in the spool is facing the cap of the spool valve.

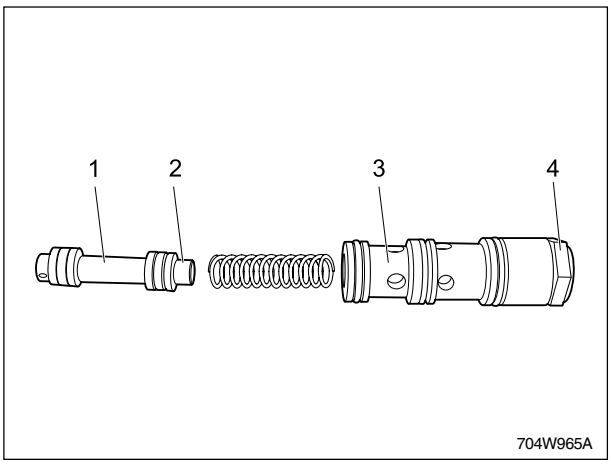

(1) Spool
(2) Balancing Passage
(3) Body
(4) Cap

- Make sure that flat on speed control valve lines up with flat on the inside of the cover.

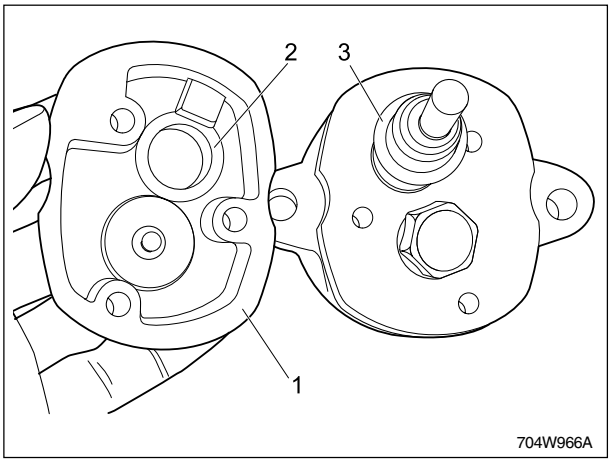

(1) Cover
(2) Flat
(3) Flat

- Secure the head to the body with socket head cap screws.
- Replace the rubber boot on the speed control shaft.

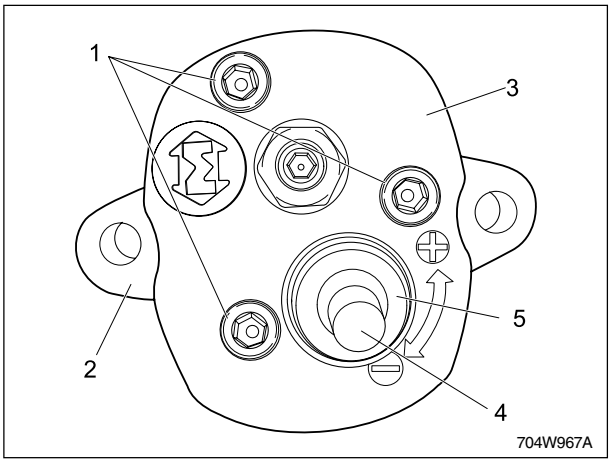

(1) Socket Head Cap Screws
(2) Body
(3) Head
(4) Speed Control Shaft
(5) Rubber Boot

4.4 INSPECTION FOR OVERHAUL

4.4.1 HYDRAULIC CYLINDER BORE

1. Check the cylinder's inside surface for scratchs or damage.
2. Using a cylinder gauge, measure the cylinder I.D.
3. If the measured valve exceeds the allowable limits, replace the hydraulic cylinder block.

Cylinder I.D. (A)	Reference dimension	90.000 ~ 90.050 mm 3.54330 ~ 3.54527 in.

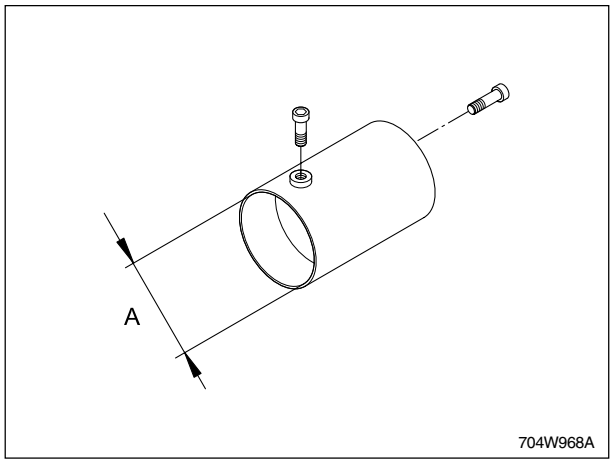

4.4.2 CLEARANCE RELATIONSHIP BETWEEN HYDRAULIC ARM SHAFT AND BUSH

1. Using a O.D. micrometer, measure the hydraulic arm O.D.
2. Using a I.D. micrometer, measure the bush I.D. and then calculate the clearance.
3. If the calculated clearance exceeds the allowable limits, replace the bush.

Clearance between hydraulic arm shaft and limit bush	Right	Reference allowable	0.025 ~ 0.160 mm 0.00098 ~ 0.00629 in.
	Left	Reference dimension	0.025 ~ 0.155 mm 0.00098 ~ 0.00610 in.

Hydraulic arm shaft O.D.	Right (A)	49.975 ~ 49.950 mm 1.96752 ~ 1.96653 in.
	Left (B)	44.975 ~ 44.950 mm 1.77066 ~ 1.76968 in.

Bush I.D. (After assembled)	Right (A1)	50.000 ~ 50.110 mm 1.96850 ~ 1.97283 in.
	Left (B1)	45.000 ~ 45.105 mm 1.77165 ~ 1.77578 in.

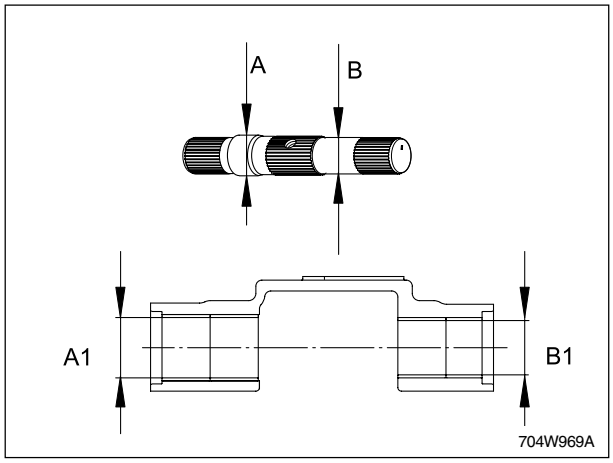

4.4.3 REACTION SPRING ASSEMBLY REFERENCE DIMENSION

Reaction spring assembly initlal length (L)	Reference dimension	50 mm 1.9685 in.

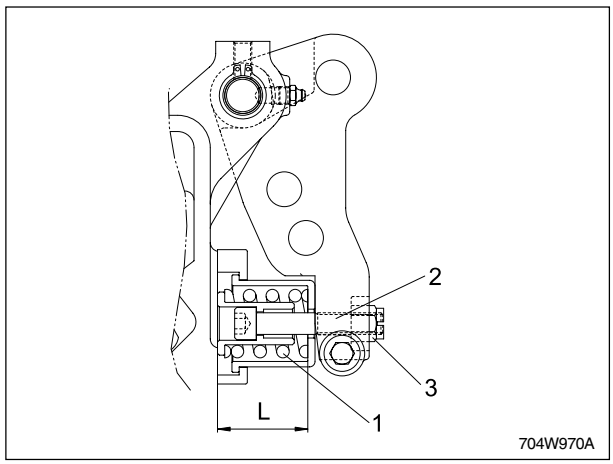

(1) Spring
(2) Hex. Bolt
(3) Nut

4.4.4 DIMENSIONAL SETTING OF POSITION CONTROL BOLT

1. When assembling the control valve (MLS valve) into power lift body, “A” dimension will be 112 mm.
2. If adjusting the control bolt (1), loosen nut (2) and then tighten-lock nut (2).

“A” Setting length	Reference dimension	112 mm 4.4094 in.

“B” Setting length	Reference dimension	50.5 mm 1.9881 in.

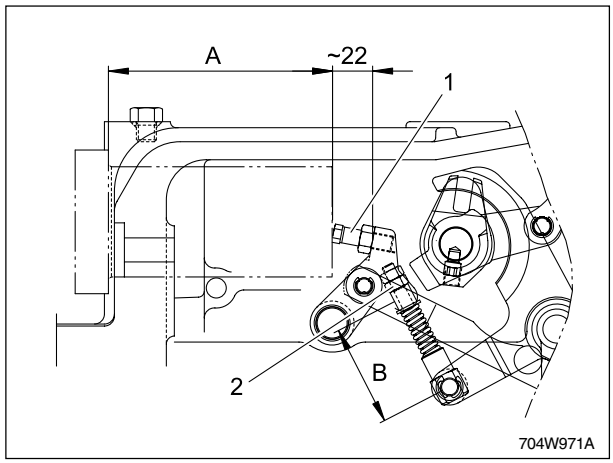

(1) Control Bolt
(2) Nut

4.4.5 LEVER POSITION SETTING

A. ADJUSTMENT OF POSITION CONTROL LEVER

The position control lever can be adjusted with a small load applied to the elevating arm.

1. Loosen the position control shaft (3), and lever tightening bolt (4).
2. Using a 13 mm spanner, rotate the position control shaft (3) counterclockwise until the elevating arm has stopped to climb by the inside hydraulic limit. Because of safety, the area, although the elevating arm is at it’s maximum angle, will never contact the hydraulic limit switch.
3. Elevate the lever up and down two or three times. Check it for operation and make sure it is located at the same position that you set it at.

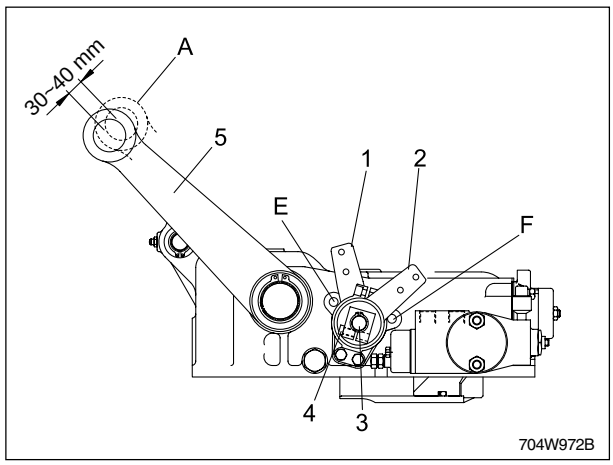

(1) Position Control Lever
(2) Draft Control Lever
(3) Position Control Shaft
(4) Hex. Bolt
(5) Lifting Arm

[A] Hydraulic Lifting Arm at End of Stroke
[E] Back Stop
[F] Front Stop

B. DRAFT CONTROL LEVER (IF EQUIPPED)

1. Lower the elevating arm, loosen the lock nut (1) and push backward.
2. Disengage the lock bolt (2).
3. Adjust the length of the feedback rod.

Length of feedback rod (L)	Reference dimension	135 mm 5.3149 in.

4. With minimum rpm, lower the position control lever (6) to the stopper (8), and then slowly raise the Draft control lever (5) toward the stopper (7) so that the elevating arm might be raised.
5. Decrease and adjust the length (L) of feedback rod gradually one rotation a time, until the rod smooth lowers.
6. After a completion of the adjustment, tighten the nut (1) and lock bolt (2).

(Ref.)

When raised to max. using the Draft control lever, height (H) will be higher between 15 and 20 mm (0.59 ~ 0.79 in.) than the max, using the position control lever.

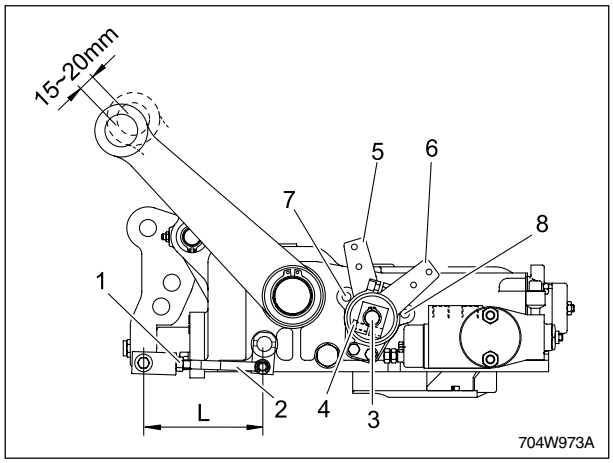

(1) Nut
(2) Bolt
(3) Position Control Shaft
(4) Hex. Bolt
(5) Draft Control Lever
(6) Position Control Lever
(7) Stopper
(8) Stopper

4.4.6 SENSIBILITY ADJUSTMENT

Position the rockshaft lifting arms, with a weight applied, so that they reach about half their angular movement range.

In this way the Control Valve is positioned in its neutral phase.

Loosen nut “A” and turn the embedded hexagonal screw “B” in a counterclockwise direction until the lifting arms start swaying continuously.

With a slow movement stop the movement of the arms by rotating screw “B” in a clockwise direction.

When the arms remain blocked in their position, which can be controlled with the relevant instrument positioned on the end of the lifting arm, rotate (clockwise) the screw “B” for 1/2~3/4 of a turn max. Lock the position with the self-locking nut “A”.

In this way the Control Valve is sensitivity adjusted.

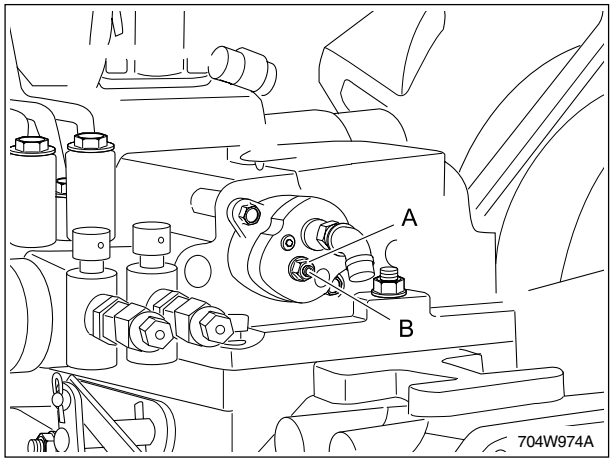

(A) Nut (B) Screw

MEMO

CK25/27/30/35

ELECTRIC SYSTEM

TABLE OF CONTENTS

1. CIRCUIT AND COMPONENT LOCATION 11-3

1.1 Circuit diagram 11-3

1.2 Electric component location 11-4

1.3 Legend for circuit diagram 11-5

1.3.1 Symbols for electric components 11-5

1.3.2 Wiring color identification 11-6

2. OPERATING PRINCIPLE 11-7

2.1 Preheating 11-7

2.2 Starting 11-8

2.3 Tachometer and hour meter 11-9

2.4 Charging 11-10

2.5 Lighting system 11-11

2.5.1 Combination switch 11-11

2.5.2 Hazard warning switch 11-12

2.5.3 Flasher unit 11-12

2.5.4 Brake and tail lighting components 11-13

2.6 Combination meter 11-15

2.6.1 Gauges and indicators 11-16

2.6.2 Sensors 11-16

3. TROUBLESHOOTING 11-17

3.1 Troubleshooting of starting circuit ... 11-17

3.2 Troubleshooting of glow plug circuit 11-17

3.3 Troubleshooting of lighting circuit ... 11-18

3.4 Troubleshooting of fuel level circuit . 11-18

3.5 Troubleshooting of oil pressure circuit 11-18

3.6 Troubleshooting of coolant temp. circuit 11-19

3.7 Troubleshooting of engine tachometer circuit 11-19

3.8 Troubleshooting of charging system 11-19

4. SERVICING 11-20

4.1 Battery 11-20

4.1.1 Checking 11-21

4.1.2 Battery removal 11-21

4.1.3 Battery installation 11-21

4.2 Starting system 11-22

4.2.1 Key switch 11-22

4.2.2 Start relay holder coil relay and preheat relay 11-23

4.2.3 Preheating system 11-24

4.2.4 Glow plugs 11-24

4.2.5 Engine stop solenoid 11-24

4.2.6 Starter motor 11-25

4.3 Charging system 11-27

4.3.1 Charging current check 11-27

4.4 Lighting system 11-28

4.4.1 Head light switch testing 11-28

4.4.2 Turn signal switch testing 11-28

4.4.3 Headlights test 11-28

4.4.4 Hazard light switch test 11-29

4.4.5 Flasher unit 11-29

4.4.6 Flasher warning light 11-29

4.4.7 Stop and tail lights (inside: stop light) 11-30

4.5 Combination meter 11-31

4.5.1 Engine oil pressure switch 11-31

4.5.2 Engine coolant temperature sensor 11-31

4.5.3 Fuel level sender 11-32

1. CIRCUIT AND COMPONENT LOCATION

1.1 CIRCUIT DIAGRAM (CK25/27/30/35 SINCE 2007)

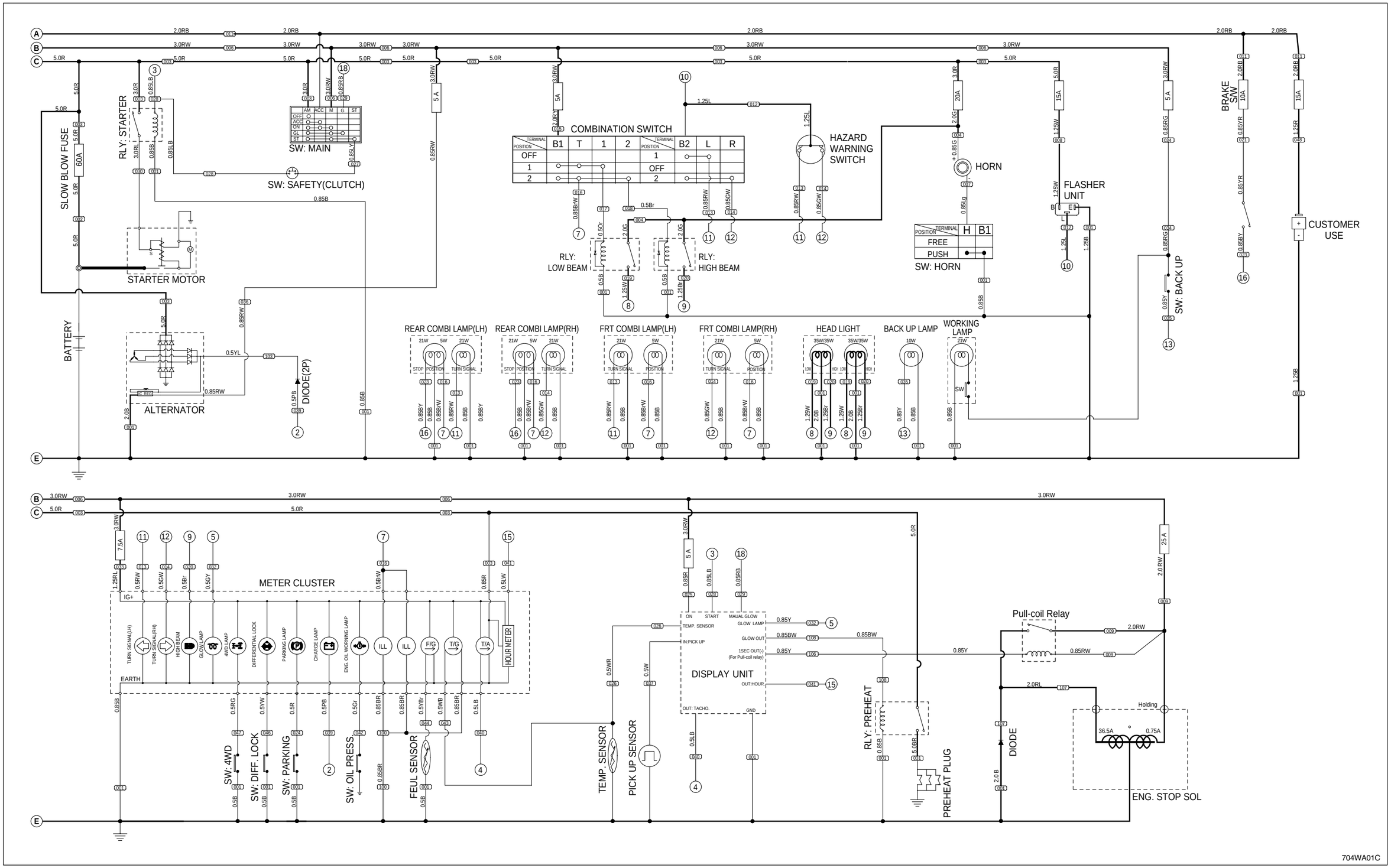

1.2 ELECTRIC COMPONENT LOCATION (CK25/30/35)

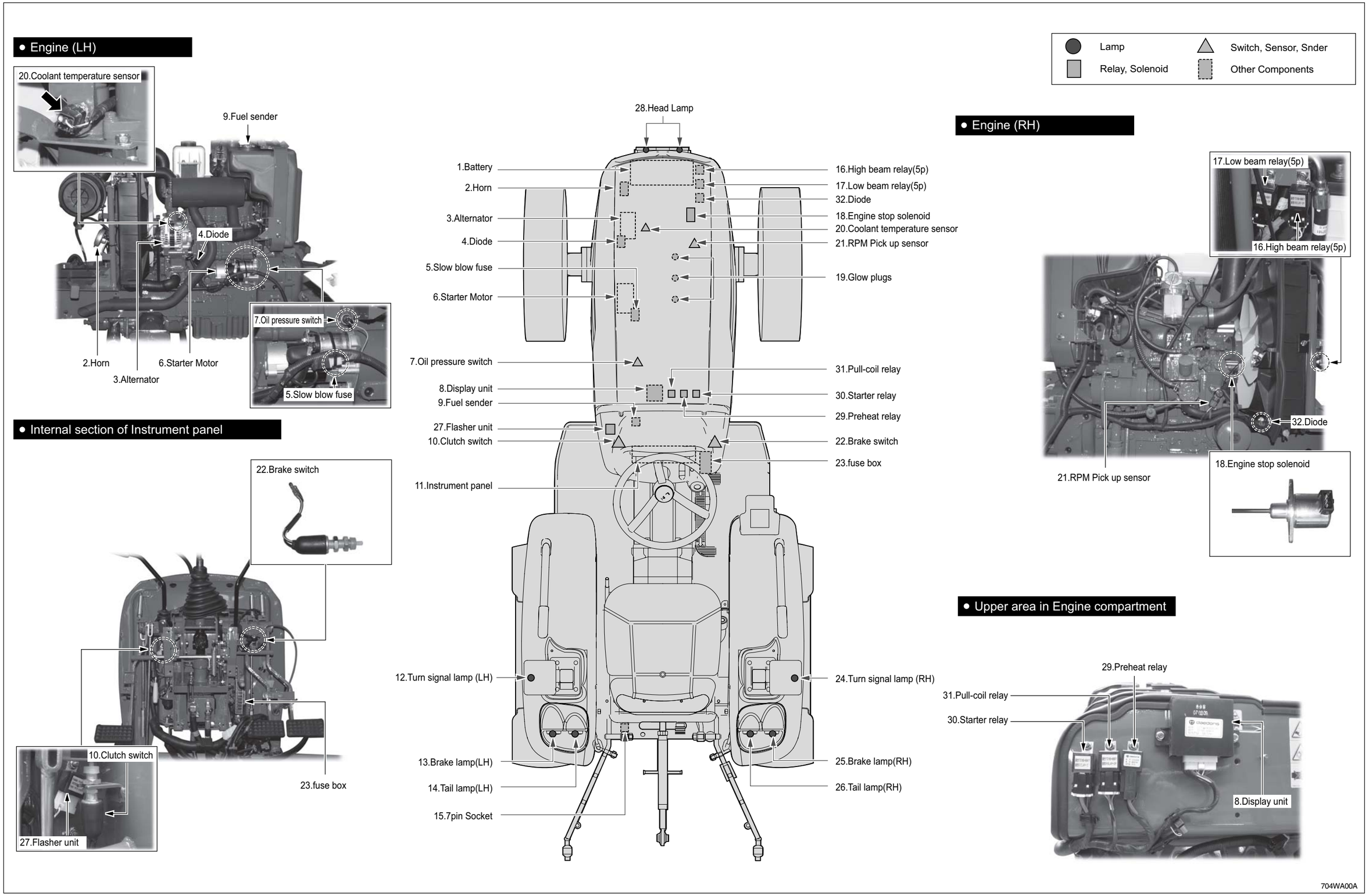

1.3 LEGEND FOR CIRCUIT DIAGRAM

1.3.1 SYMBOLS FOR ELECTRIC COMPONENTS

Symbol	Description	Symbol	Description
	Fuse		Single bulb Lamp
	Slow-blow fuse		Double bulb
M	Motor		Diode Zener-diode
	Switch (Normally Open Type) Switch (Normally Close Type)		LED (Light Emitting Diode)
	Compressor		Photo Diode
	Ground (Wire) Ground (Chassis)		N.P.N Transistor P.N.P Transistor
+	Condenser/Capacitor		Meter
	Resistor		Thermistor
	Coil	+ −	Speaker
	Battery		Pick up sensor
	Disconnected wire		Solenoid
	Connected wire		

1.3.2 WIRING COLOR IDENTIFICATION

Code	Color	Code	Color
B	Black	Y	Yellow
L	Blue	Lg	Light Green
W	White	Gr	Gray
Br	Brown	O	Orange
G	Green	P	Pink
R	Red	BY	Black/Yellow
BW	Black / White	LgR	Light Green / Red
BR	Black / Red	LgW	Light Green / White
YG	Yellow / Green	BL	Black / Blue
YBr	Yellow / Brown	LW	Blue / White
BrR	Brown / Red	GW	Green / White
RW	Red / White	RB	Red / Black
YR	Yellow / Red	LR	Blue / Red
YW	Yellow / White	LB	Blue / Black
WY	White / Yellow	RL	Red / Blue

1. The following figures are examples for colors according to the codes.

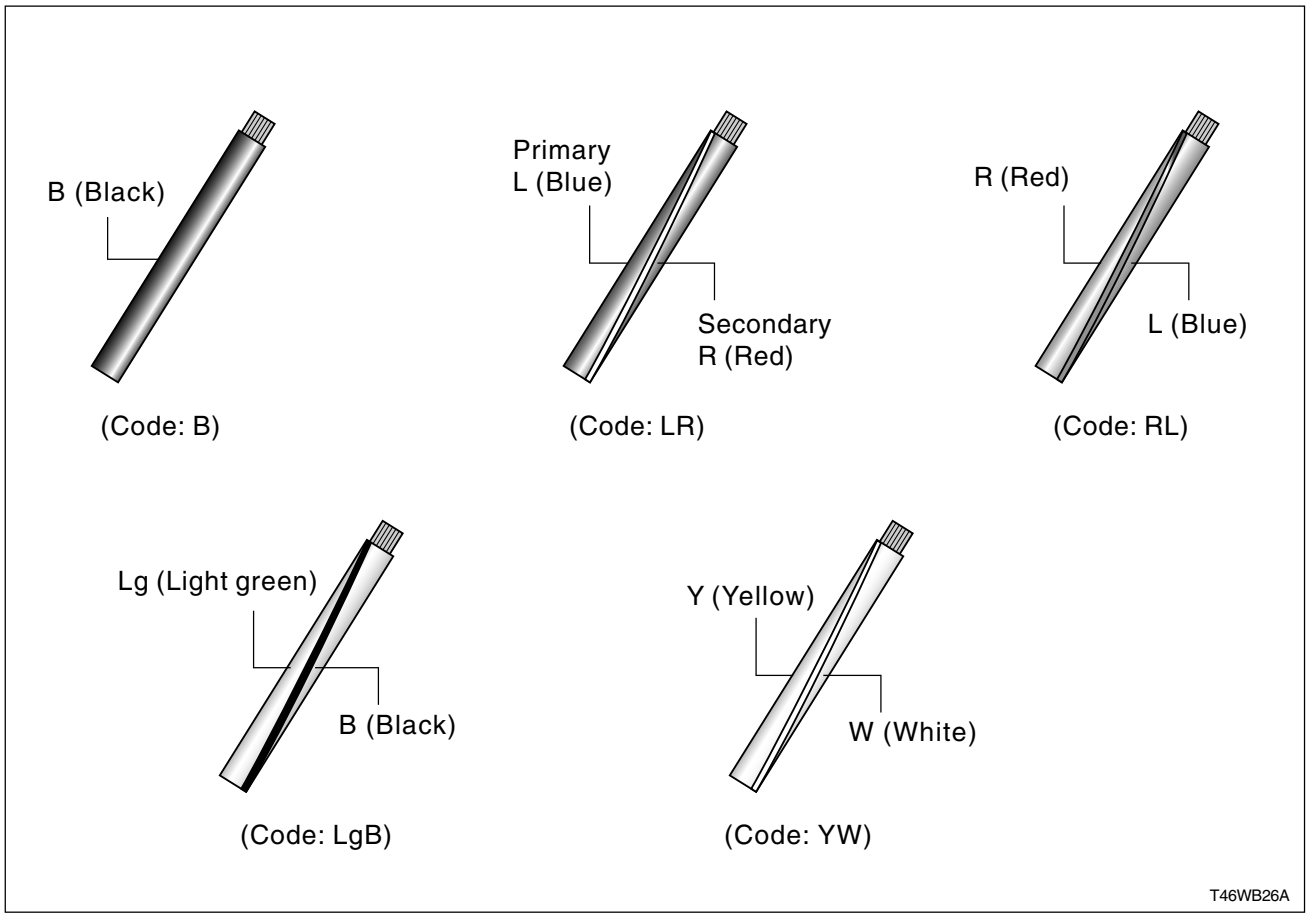

2. OPERATING PRINCIPLE

2.1 PREHEATING

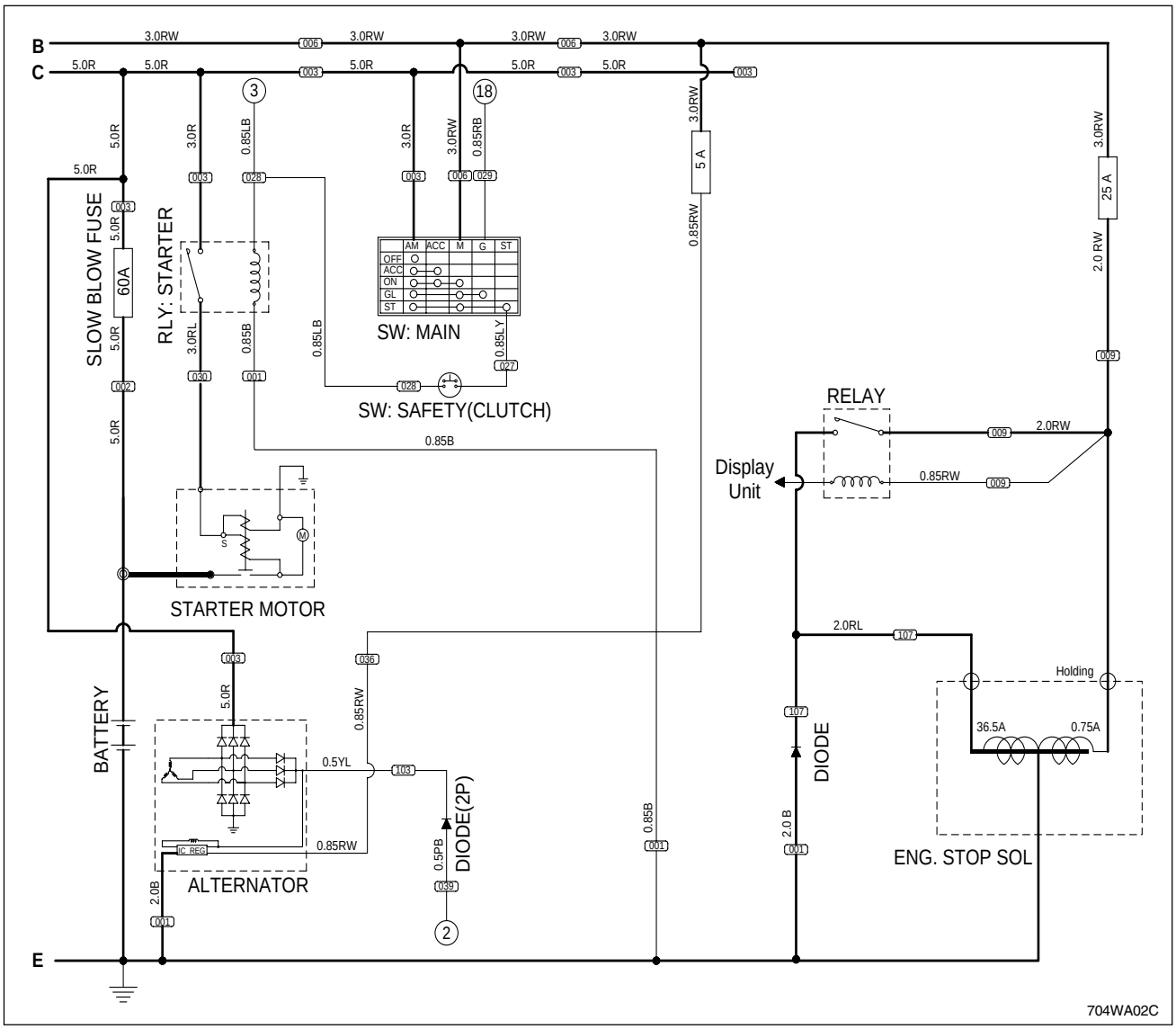

When the key switch is turned to the “ON” position, the ON terminal of the display unit is supplied with power. If the coolant temperature is below 30°C, the display unit receives a signal through the temperature sensor terminal and turns on the preheat lamp on the instrument panel for up to 8 seconds through the preheat lamp terminal and operates the preheat relay through the glow out terminal for up to 15 seconds for preheating. However, the preheat lamp and preheating operation stop when the key switch is turned to the “START” position. When the key switch is back to the “ON” position after starting the engine, the preheat controller operates the preheat relay again for 15 seconds for after heating. This is to optimize fuel combustion in the engine after starting.

If necessary, it is possible to preheat the glow plug temporarily (manually) by setting the key switch to the “G” position between the “ON” and “ST” positions. The preheat lamp on the instrument panel does not come on in case of after and manual heating.

2.2 STARTING

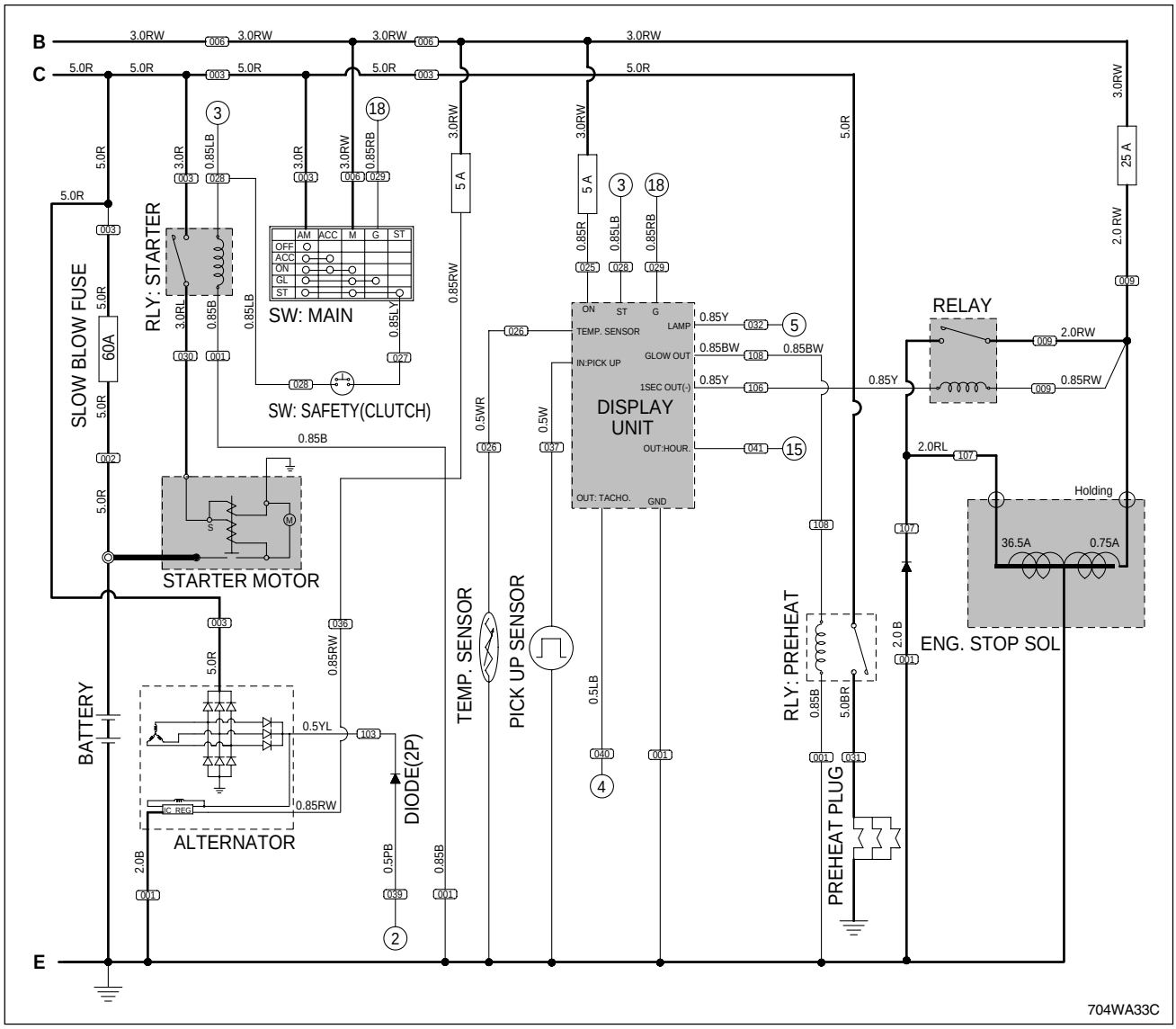

When the key switch is set to the “ON” position, the display unit sends a signal through the out terminal to the pull coil relay for 1 ± 0.5 seconds for its operation. Then, the pull-in coil of the solenoid operates to set the rack of the injection pump in the engine to the starting position. The solenoid is kept pulled even after the pull coil stops because the hold coil still during the key is ON position operates.

When the key switch is turned to the “ST” position, the solenoid operates and power is supplied to the relay in the start motor to start the engine through cranking. The power supplied to the start motor relay passes through the clutch switch. Therefore, the clutch should be disengaged in order to start the engine.

2.3 TACHOMETER AND HOUR METER

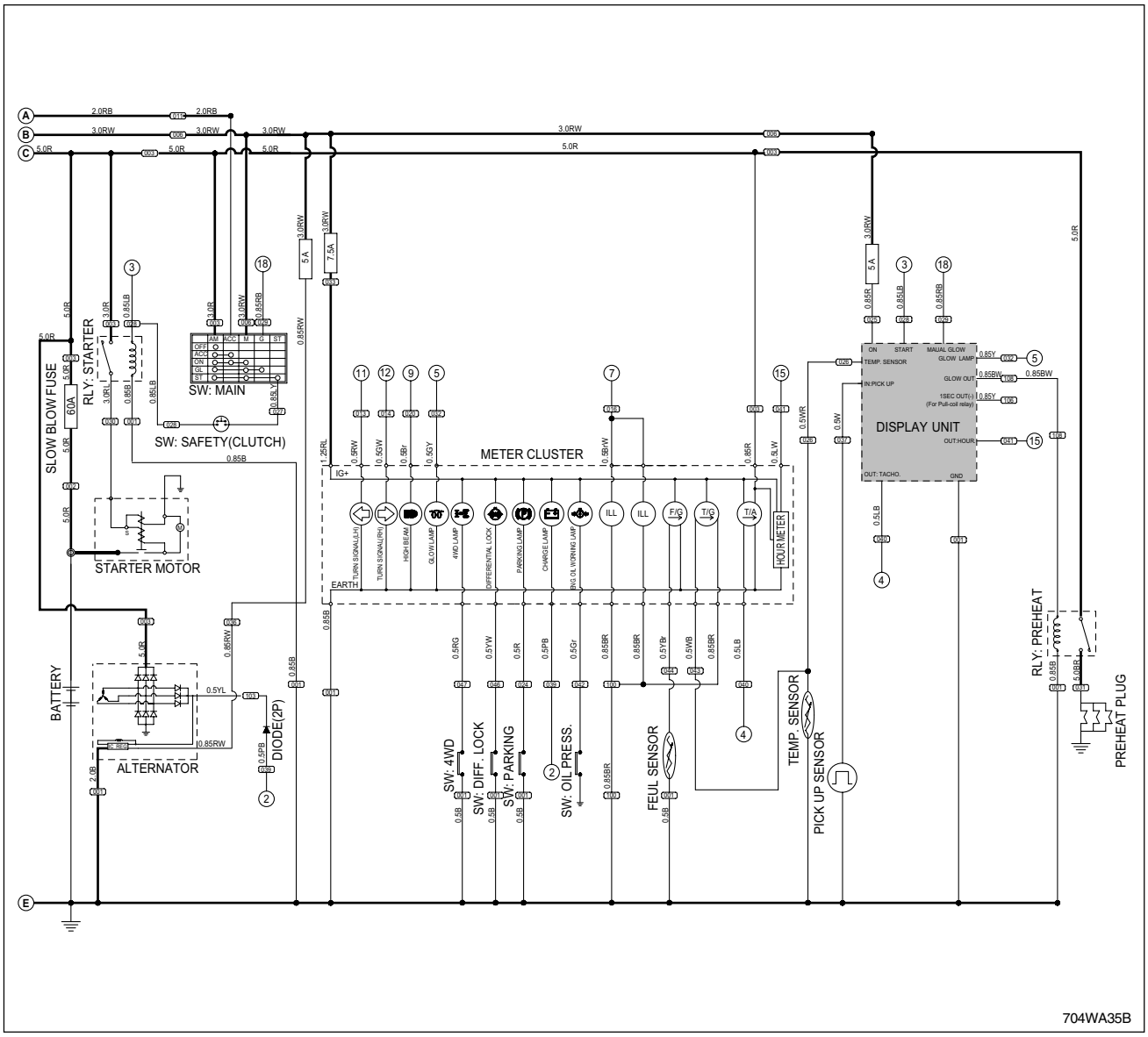

When the engine is started, the pickup sensor sends a pulse signal to the pickup terminal of the display unit. Then, the display unit processes and sends this signal to the tachometer (4), and to the hour meter (15) on the instrument panel through the hour terminal to operate the tachometer and hour meter.

The hour meter operates based on real time regardless of the engine rpm.

2.4 CHARGING

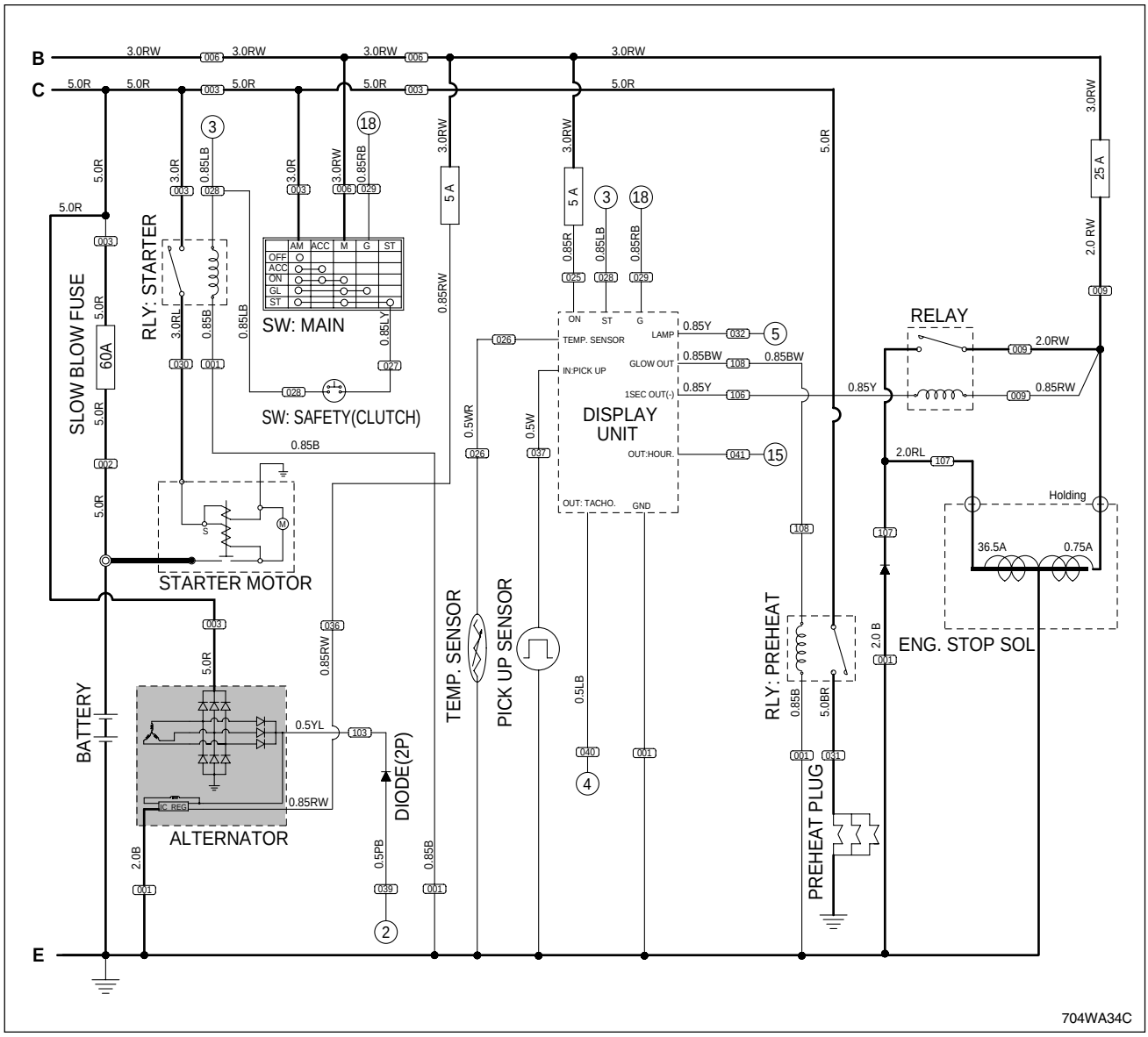

When the ignition key is turn to the “ON” position with the engine stopped, the charge warning lamp on the instrument panel comes on.

This is done as the power from instrument flows through the diode in the (2) and the (IC) register in the alternator to the ground.

When the alternator starts to operate after the engine is started, approx. 14 V of voltage may flow to the charge warning lamp. However, this voltage is cut by the diode to turn off the lamp. If the alternator is in a normal condition but the charge warning lamp does not go off after the engine is started, the diode may be faulty.

2.5 LIGHTING SYSTEM

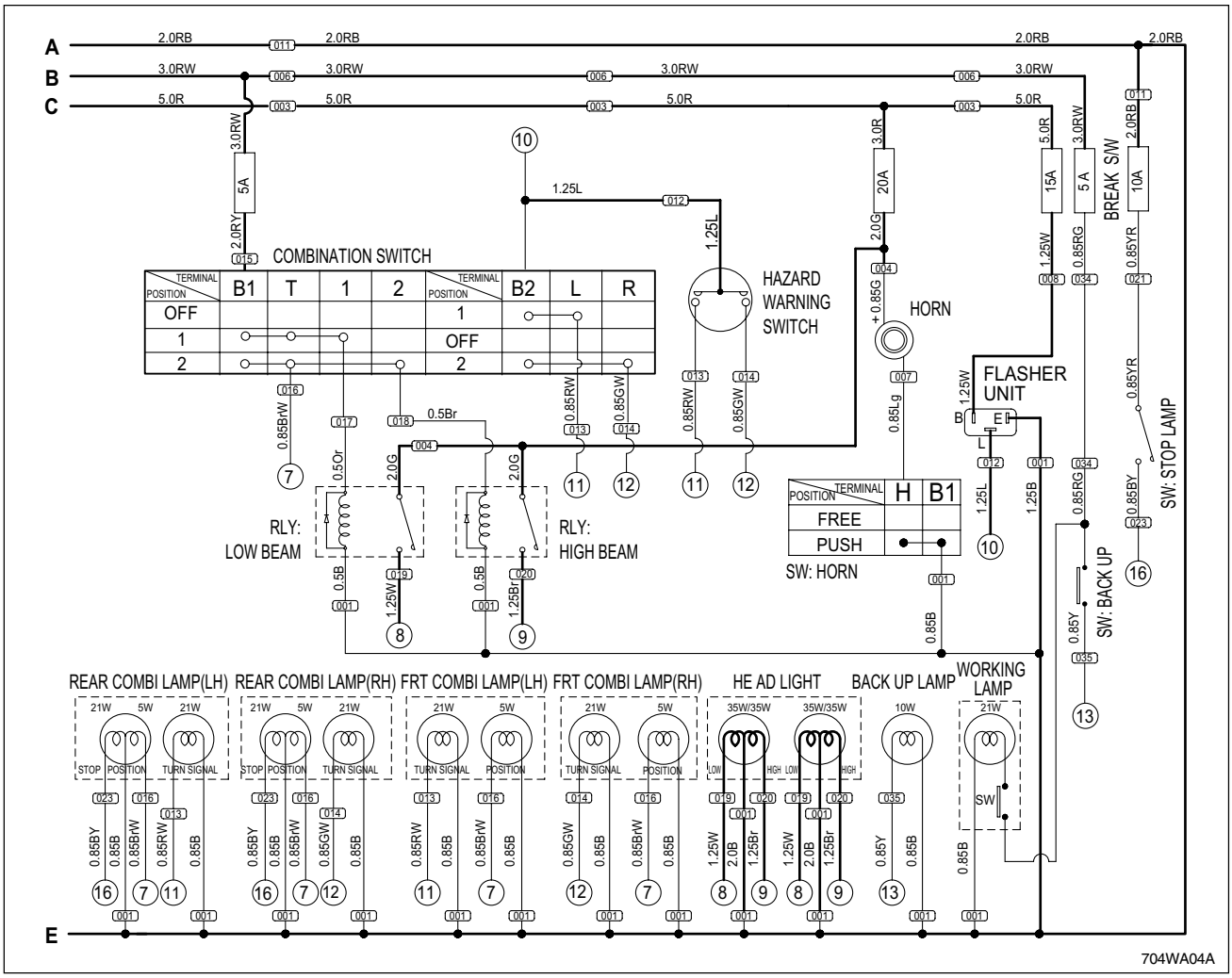

The lighting system consists of combination switch, hazard warning switch, flasher unit, stop lamp relay, stop switch, head lights, turn signal lamps, tail lamps and stop lamps.

2.5.1 COMBINATION SWITCH

The light switch is located on the left-hand side of the dash.

The three position of the light switch are;

OFF

Taillight/Headlight (low-beam)

Headlights (high beam)

When the switch is in the “Headlights (high beam)” position, the blue indicator will light.

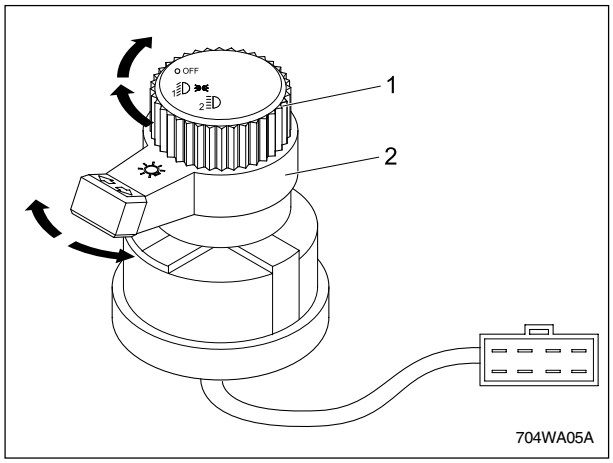

(1) Head Light Switch

(2) Turn Signal Light Switch

2.5.2 HAZARD WARNING SWITCH

The hazard light switch is a push-pull type switch located on the left-hand side of the dash below the main light switch. The two positions of the hazard light switch are;

OFF(Push)

ON (Pull)

When the hazard light switch is in the “ON” position, the turn signal symbol located in combination meter will illuminate green and flash.

IMPORTANT

- ***The hazard lights can be activated with the key switch in the “OFF” position.***

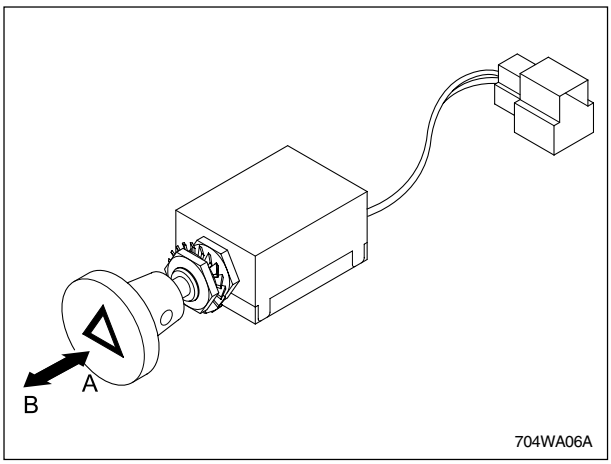

(A) OFF (Push) (B) ON (Pull)

2.5.3 FLASHER UNIT

The flasher unit controls the flashing of the hazard lights. This flasher unit is located under the combination meter.

Control the blinking time of the hazard flasher lamp.

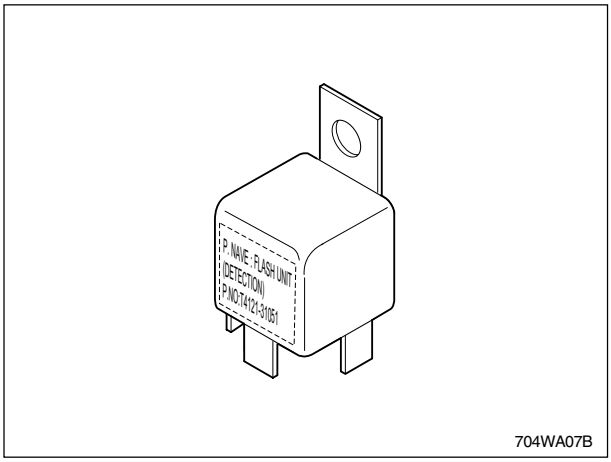

2.5.4 BRAKE AND TAIL LIGHTING COMPONENTS

A. BRAKE SWITCH

Depressing the brake pedal switches the stop switch off and the signal will be sent to stop the relay. This switch is a normally closed type.

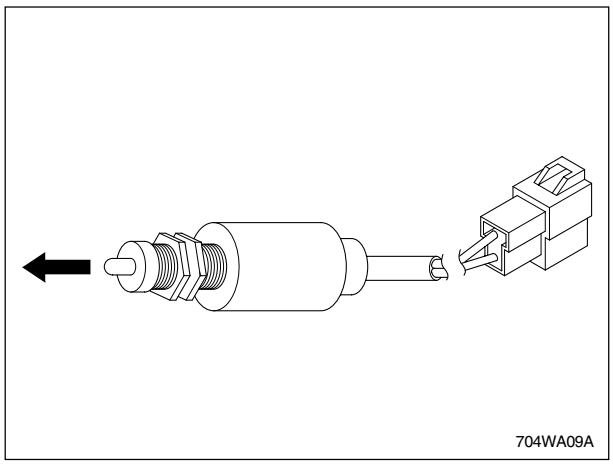

B. BRAKE LIGHTS

When the operator pushes the brake pedal, these lights will be illuminated.

It gives the information of the stop to following vehicle.

Rated watt of the bulb is 12 V 21 W. Use only the rated watt of the bulb.

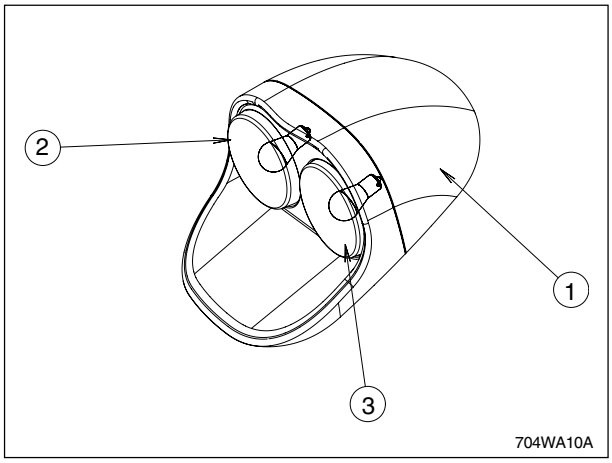

(1) Rear Lamp Cover (LH) (3) Stop Light / Tail Light
(2) Turn Signal Lamp

C. TAIL LIGHT (EU, EN)

This lights only operates while the main light switch is switched to “Tail light/head light”.

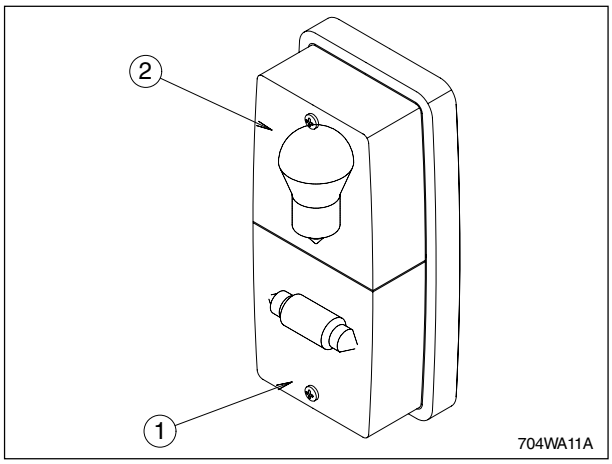

(1) Tail light (2) Turn Signal Lamp

D. TURN SIGNAL LAMP (USA, AU)

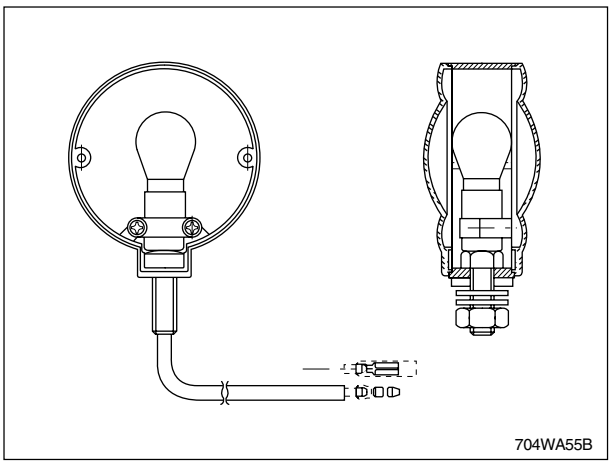

E. HEAD LIGHTS

This head lights help to make possible to drive during the night time.

CK25/30/35-USA/AU

This head lights have 12 V 35 / 35 W bulbs.

Use only same capacity bulb.

CK25/30/35-EU

This head lights have 12 V 55 / 60 W bulbs.

Use only same capacity bulb.

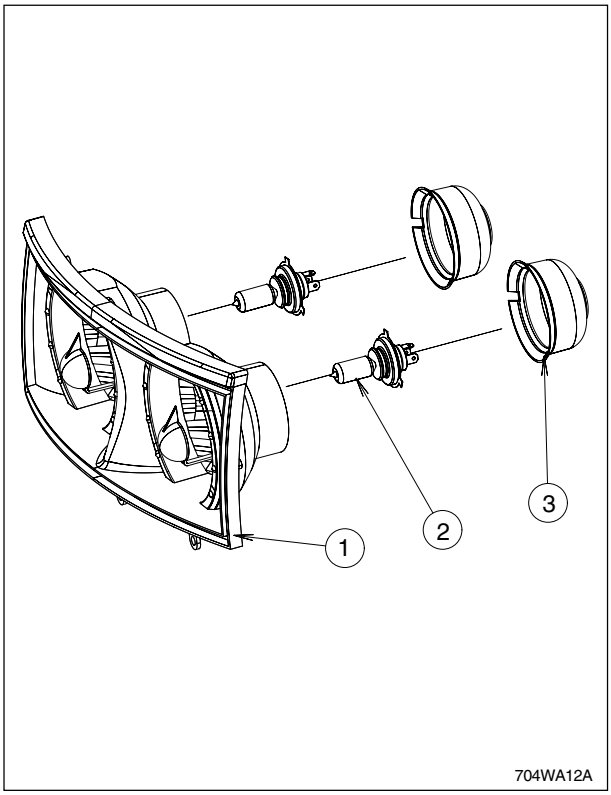

(1) Head Lamp Ass'y
(2) Bulb
(3) Rubber Cover

2.6 COMBINATION METER

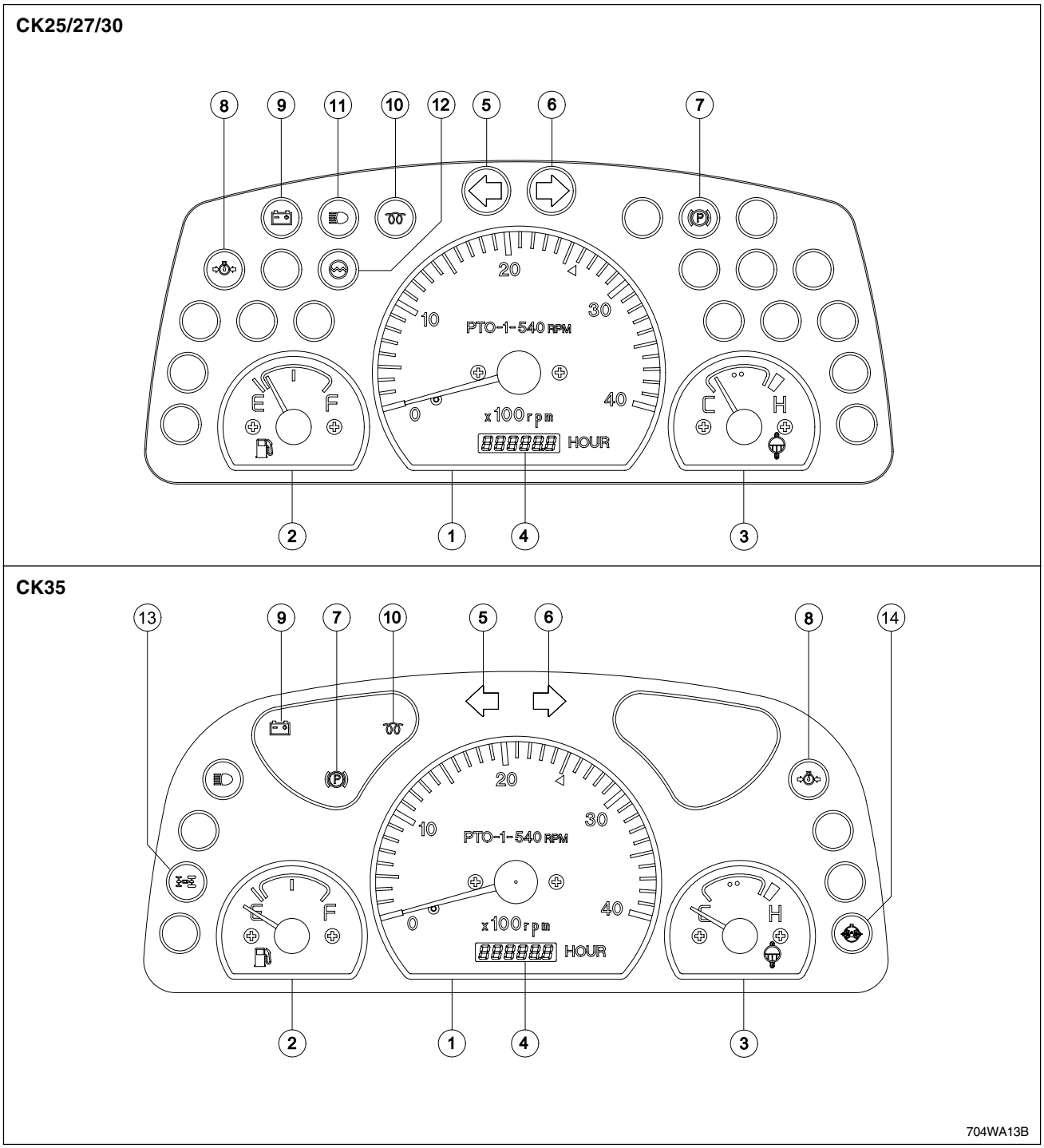

(1) Tachometer
(2) Fuel gauge
(3) Engine Coolant Temp. Gauge
(4) Hour Meter
(5) Turn Signal Indicator (LH)
(6) Turn Signal Indicator (RH)
(7) Parking Brake Operation Indicator
(8) Engine Oil Low Pressure Warning Lamp
(9) Battery Discharging Warning Lamp
(10) Pre-heat Operation Indicator
(11) High Beam Operation Indicator
(12) Coolant Remaining Warning Lamp
(13) 4WD Operation Indicator
(14) Differencial Lock Indicator

2.6.1 GAUGES AND INDICATORS

A. TACHOMETER

This shows the Engine RPM and PTO RPM. It is operated by electronic pick-up sensor.

B. FUEL GAUGE

This gauge indicates the amount of fuel remaining in the tank. You must refill the fuel before fuel tank is empty.

C. ENGINE COOLANT TEMP. GAUGE

This gauge indicates the temperature of the engine coolant. When the gauge indicates the red zone, you must check the cause. Never operates the tractor while the gauge indicates red zone.

D. HOUR METER

When the engine is in motion, the clock starts moving. For every hour passed, the clock will increase by 1.

E. TURN SIGNAL INDICATOR (LH)

F. TURN SIGNAL INDICATOR (RH)

G. PARKING BRAKE OPERATION INDICATOR

H. ENGINE OIL LOW PRESSURE WARNING LAMP

The light will illuminate when the engine oil pressure is below than set value. As soon as the light illuminates, stop the engine and investigate the cause.

(And visit the nearest maintenance facilities.)

I. BATTERY DISCHARGING WARNING LAMP

The illuminates when the key switch is in the “ON” position and goes out when the engine is started. If this bulb becomes lit during operation, it indicates that the charging system is not operation normally. The battery can be fully discharged under this condition. You must check the cause as soon as possible.

J. PRE-HEAT OPERATION INDICATOR

When the key switch is in the “ON” position, this light will illuminate for 8 seconds. If the whether is cold, keep the key switch in the “ON” position before start for a while or until the lamp goes out. During the period, the glow plug and combustion chambers are heated and the engine becomes easier to start.

K. HIGH BEAM OPERATION INDICATOR

L. COOLANT REMAINING WARNING LAMP

M. 4WD OPERATION INDICATOR

N. DIFFERENTIAL LOCK INDICATOR

2.6.2 SENSORS

A. ENGINE OIL PRESSURE SWITCH

The oil pressure switch is located on the rear right side of the engine. The switch opens under normal oil pressure(above 0.5 ± 0.1 kgf/cm²). It closes when oil pressure is low(0.5 ± 0.1 kgf/cm²) to complete the ground circuit of the oil pressure warning light.

When the ground circuit is completed, the oil pressure warning light illuminates on the instrument panel. When the key switch is turned to the “ON” position. It goes out when the engine is started. If the light does not go out after the engine has started, first check the engine oil level. If the oil level is correct, check for a malfunctioning switch or engine oil pump.

B. ENGINE COOLANT TEMPERATURE SWITCH

The sensor detects the temperature of the engine coolant to transmit the auto preheat signal to the temperature gauge and display unit of the instrument cluster.

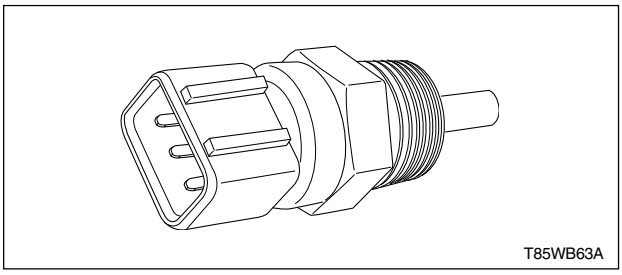

Temp (°C)	60	85	110	125
Resistance (Ω)	125	48 ± 58	$24^{+2.2}_{-1.9}$	15.2

- The resistance measurement for the temperature sensor of the instrument cluster must be performed on No. 2 and ground.

The resistance value for the temperature sensor (The values below are only for references)

Temp (°C)	Resistance (kΩ)	Temp (°C)	Resistance (kΩ)
-40	48.14	60	0.5865
-20	15.48 ± 1.35	80	0.3222
0	5.790	100	0.1884
20	2.45 ± 0.14	110	0.1471 ± 0.002
40	1.148	120	0.1163

* The reference temperature of the temperature sensor for the preheat relay output is 30°C.

The measurement of the preheat temperature sensor must be performed on No.1 and 3.

C. FUEL LEVEL SENDER

The fuel level sensor, is mounted on the top of the fuel tank. The sensor float moves up and down with the fuel in the tank, while changing the resistance to the ground circuit of the fuel gauge.

3. TROUBLESHOOTING

3.1 TROUBLESHOOTING OF STARTING CIRCUIT

Condition	Possible Cause	Remedy
Start motor will not energize	• Insufficient battery charge	Recharge or replace the battery
	• Blown 60 amp fuse	Replace the 60 amp fuse
	• Inoperative starter switch	Test the switch and replace if necessary Replace the switch
	• Malfunctioning safety start switch	Check the switch
	• Malfunctioning starter	Check the starter Repair or replace the starter if necessary
	• Malfunctioning starter relay	Check the starter relay Replace the starter relay if necessary

3.2 TROUBLESHOOTING OF GLOW PLUG CIRCUIT

Condition	Possible Cause	Remedy
Glow plug will not heat.	• Insufficient charge	Recharge or replace the battery
	• Blown 60 amp fuse	Replace the 60 amp fuse
	• Inoperative starter switch	Test the switch and replace if necessary
	• Corroded buss bar connection	Clean or replace the buss bar
	• Inoperative glow plug	Check plug resistance and replace if necessary
Glow plug indicator light not functioning properly.	• Inoperative glow plug timer relay	Check for current and ground circuit to timer relay Test the timer relay and replace if necessary
	• Inoperative indicator light	Check for current and ground circuit Replace the indicator bulb
Glow plug indicator does not glow	• Battery discharged or defective	Recharge or replace

3.3 TROUBLESHOOTING OF LIGHTING CIRCUIT

Condition	Possible Cause	Remedy
Lights will not illuminate.	• Insufficient battery charge • Blown 60 amp. fuse • Inoperative starter switch	Recharge or replace the battery Replace the 60 amp. fuse Test the switch and replace if necessary
Front lights will not illuminate.	• Blown fuse • Malfunctioning light switch • Improper connection at connector • Improper ground to headlight • Blown bulbs, inoperative relay	Replace the 20 amp fuse Test the switch and replace if necessary Check connection of terminals and correct if necessary Check ground source at terminal Replace the bulb, Replace the relay
Rear lights will not illuminate	• Blown 7.5 amp fuse • Malfunctioning light switch • Improper connection at connector • Improper ground to stop light • Blown bulbs	Replace the 7.5 amp fuse Test the switch and replace if necessary Check connection of terminals and correct if necessary Check ground source at terminal Replace the bulb
Hazard lights not flashing	• Inoperative flasher unit • Blown fuse	Test the unit and replace if necessary Replace the 10 amp fuse
Lights are dim or not illuminated	• Improper ground circuit • Improper connection at harness	Check ground source Check connections at harness connectors

3.4 TROUBLESHOOTING OF FUEL LEVEL CIRCUIT

Condition	Possible Cause	Remedy
Inoperative fuel level gauge	• Blown 7.5 amp fuse • Malfunctioning sending unit • Improper ground circuit • Malfunctioning fuel gauge	Replace the 7.5 amp fuse Test the sending unit and replace if necessary Check the ground source. Test the fuel gauge and replace if necessary

3.5 TROUBLESHOOTING OF OIL PRESSURE CIRCUIT

Condition	Possible Cause	Remedy
Oil pressure warning light stays “ON”	• Blown 7.5 amp fuse • Low oil pressure • Malfunctioning sensor • Short circuit of sensor wire to ground • Malfunctioning instrument panel	Replace the 7.5 amp fuse Check the engine Test the sensor and replace if necessary Check the circuit Test the oil pressure gauge and replace if necessary

3.6 TROUBLESHOOTING OF COOLANT TEMP. CIRCUIT

Condition	Possible Cause	Remedy
Inoperative coolant temp. gauge	• Blown fuse • Malfunctioning temp. sensor • Improper ground circuit	Replace the fuse Test the temp. sensor and replace if necessary Check the ground source.

3.7 TROUBLESHOOTING OF ENGINE TACHOMETER CIRCUIT

Condition	Possible Cause	Remedy
Engine tachometer does not function when engine is running	• Trouble in eletronic pick-up sensor, display unit or wrong wiring. • Gear in combination meter defective	Replace if necessary Check the connection Check the gear and replace if necessary

3.8 TROUBLESHOOTING OF CHARGING SYSTEM

Condition	Possible Cause	Remedy
Charging lamp does not light when main key switch turned ON.	• Fuse blown • Wire harness disconnected or improperly connected • Alternator defective	Replace the fuse Check the connection and repair if necessary. Repair or replace the alternator
Charging lamp dose not go off when Engine is running	• Wiring harness disconnected or improperly connected. • Alternator defective	Check the connection and repair if necessary. Repair or replace the alternator

4. SERVICING

4.1 BATTERY

The tractors are equipped with a 12-volt battery with a minimum cold cranking ability of 630-ampare at -18°C (0°F). The battery is located under the hood in front of the radiator. The battery connections must be tight and free of corrosion. If necessary, wash the battery's outside surface and terminals with a solution of baking soda and water, making sure the solution does not get inside the battery. After cleaning, wash the battery with clean water, then apply a small amount of petroleum jelly to the terminals to prevent corrosion. A good battery charge must be maintained in freezing temperatures. If the battery is allowed to become discharged or run down, the electrolyte will become weak and can possibly freeze. This can result in damage to the case. If the water must be added, use distilled water. Add the water just before using the tractor. This ensures that the water will mix with the electrolyte during the charging process, preventing the water from freezing.

CAUTION

- ***To avoid accidental short circuit, "be sure to attach the positive cable to the positive terminal before the negative cable is attached to the negative terminal.***
- ***Never remove the battery cap while the engine is running.***
- ***Keep electrolyte away from eyes, hands and clothes. If you are spattered with it, wash it away completely with water immediately.***
- ***Keep open sparks and flames away from the battery at all times. Hydrogen gas mixed with oxygen becomes very explosive.***

IMPORTANT

- ***If the machine is to be operated for a short time without battery(using a slave battery for starting), use additional current(like lights) while the engine is running and insulate the terminal of battery. If this advice is disregarded, damage to AC generator and regulator may result.***

4.1.1 CHECKING

A. BATTERY VOLTAGE

1. Stop the engine and turn off the main key switch.
2. Connect the Voltage meter like figure.

Sect.	Factory spec.
Battery voltage	More than 12 Volt

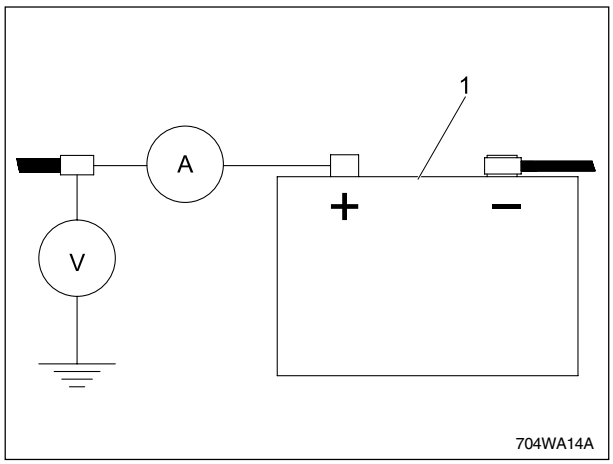

(1) Battery
(A) Amparemetor (V) Voltmeter

B. CHARGING CURRENT MEASURING

1. Start the engine. Then detach the positive cord of the battery.
2. Connect the Ampere meter like figure.
3. Operates all electrical system (like head lights …).

CAUTION

- ***The Ampere meter must be connected after the engine is started.***
- ***If electric load is not enough or battery is fully charged, you can not get the following results.***

Sect.	Rated spec.
Current	max. 50 A
Voltage	14.7 V ± 0.3V
Engine rpm	2,500 rpm

4.1.2 BATTERY REMOVAL

1. Raise the tractor hood by moving the latch release to the right and lifting the hood to its fully raised position.
2. Disconnect the negative (-) battery cable 3.
3. Disconnect the positive (+) battery cable 2.
4. Remove the battery hold-down hardware (4), (5), and remove the battery from the tractor.

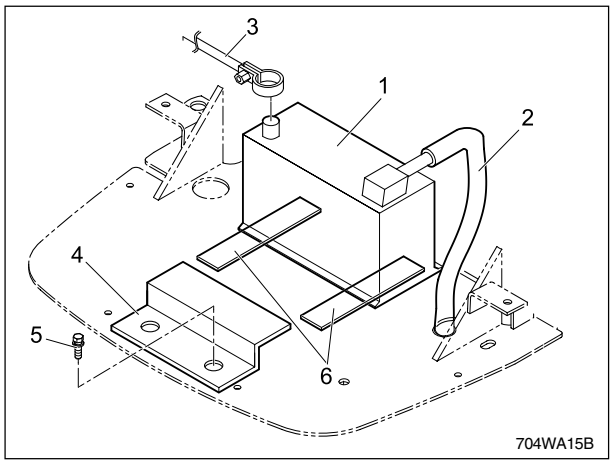

(1) Battery (4) Battery Bracket
(2) Battery Cord (+) (5) Bolt
(3) Battery Cord (-) (6) Cushion Rubber

4.1.3 BATTERY INSTALLATION

1. Orient the battery so that the posts are toward the rear of the tractor. Install the battery and the hold-down bracket (4), and hardware (3), positioning the hold-down strap so that it clear all other components.
2. Connect the positive (+) Red cable (3), to the positive (+) terminals and the negative (-) BLACK cable (3), to the negative (-) terminals.
3. Install the protective caps over the battery terminals and cable connections.

4.2 STARTING SYSTEM

4.2.1 KEY SWITCH

The key switch is located on the right side of the operator's console. The five positions of the switch are:

STOP ····· Off
ACC ····· Accessory
····· Key On
····· Pre-heat
····· Start

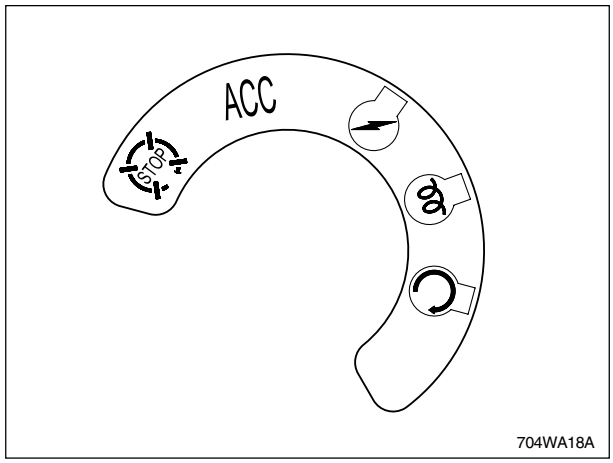

NOTE:

- *All positions are in a clockwise rotation.*
- *The "START" position is spring loaded to return to "ON" position.*

A. KEY SWITCH TESTING

Disconnect the key switch from the wiring harness connector. Use an ohmmeter to test the switch.

- With the key in the "OFF" position, continuity will not exist between any of the terminals, not shown.
- With the key in the "ACCESSORY" position, there will be continuity between the (BATTERY) and (ACCESSORY) terminals of the switch, and (A) and (B) of the connector.
- With the key in the "ENGINE PREHEAT" position, there will be continuity between the (BATTERY) and (HEAT) terminal of the switch, and (A) and (D) of the connector.
- With the switch in the "ON" position, there will be continuity between (BATTERY) and (ON) terminal of the switch, and (A) and (C) of the connector.
- With the key in the "START" position, there will be continuity between the (BATTERY) and (START) terminals of the switch, and (A) and (C) of the connector. If the test results are not as outlined above, replace the key switch.

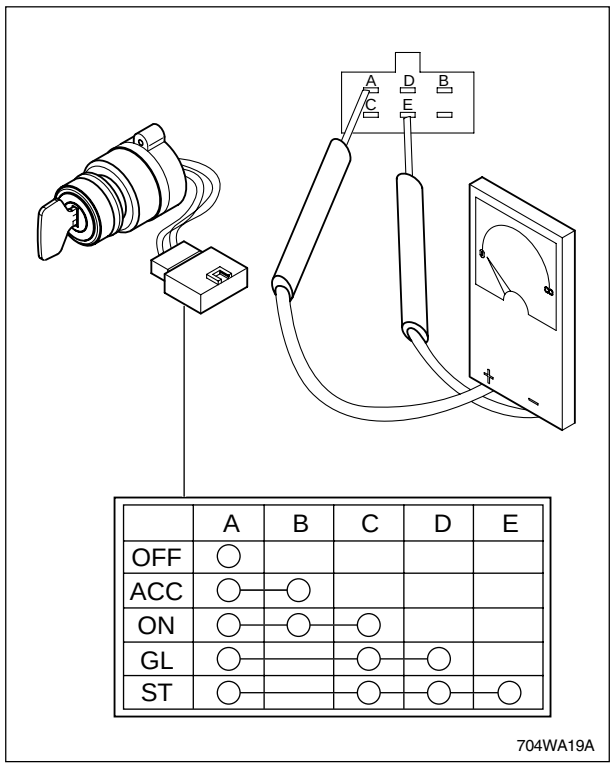

	A	B	C	D	E
OFF	○				
ACC	○	○			
ON	○	○	○		
GL	○		○	○	
ST	○		○	○	○

(A) Battery
(B) Accessory
(C) Key ON
(D) Engine Heat
(E) Start

4.2.2 START RELAY HOLDER COIL RELAY AND PREHEAT RELAY

They are interchangeable.

A. RELAY TESTING

To test a relay, disconnect it from the circuit. Use an ohmmeter to verify non-energized conditions. Connect the ohmmeter leads to terminals 87 and 30.

- There will be no continuity between terminals 87 and 30 if the relay is working properly.

Next use the ohmmeter to verify energized conditions. Energize the coil by applying 12 volts of current across terminals 85 and 86. Connect the ohmmeter leads to terminals 87 and 30.

- There will be continuity between terminals 87 and 30 if the relay is working properly.
- If continuity readings do not match those stated in the above test procedures, replace the relay.

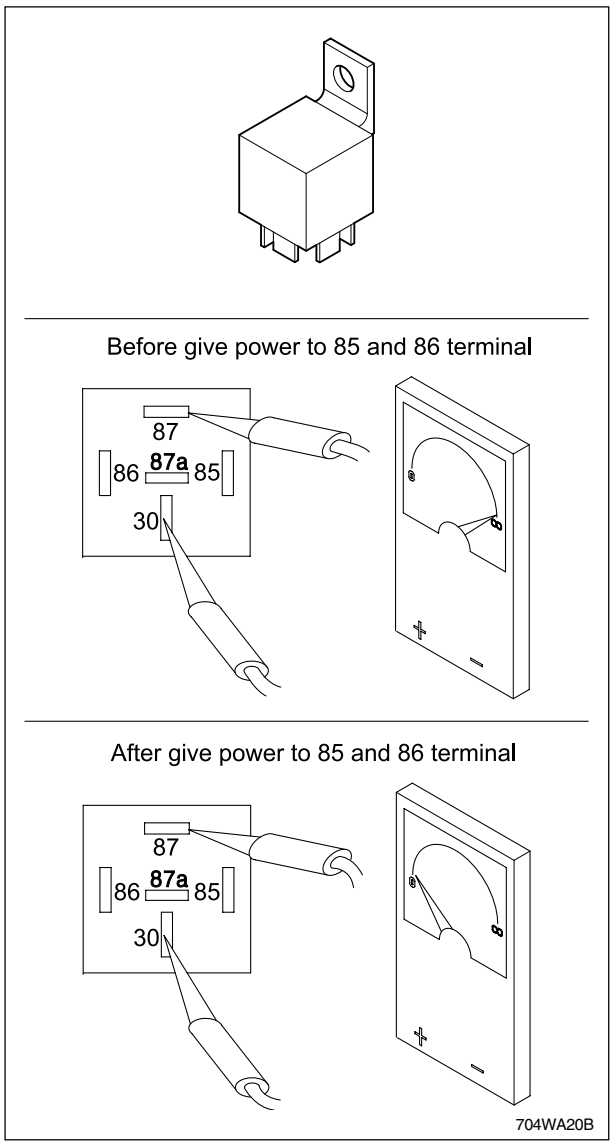

4.2.3 PREHEATING SYSTEM

The pre-heat controller is fixed on left side of the this controller. It limits the length of time that the glow plug operates.

A. PRE-HEAT CONTROLLER TESTING (DISPLAY UNIT)

NOTES:

- *Be carefully the polarity of the battery.*

A 12-volt battery, test light, a switch and jumper wires are needed to test the pre-heat controller.

1. After connecting as shown in the tigure, switch it on.
2. Check to see that the glow lamp of terminal No. 6 lights for 8 seconds.
3. Check to see that the test lamp lights for 15 seconds.
4. If the lamp from terminal No. 4 to 6 does not light, connect terminal No. 2 with GND(grounding) and check if the lamp lights.
5. Finally, if the lamp won't light, replace the controller.

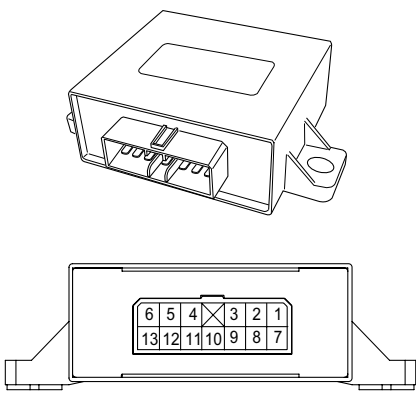

704WA24B

No.	Signal name	No.	Signal name
1	Key on +12V	7	Preheat Relay
2	Preheat lamp	8	Electronic pick up signal
3		9	1Hz output
4	Ignition switch ST	10	Cooltant tempertature sensor
5	Manual preheat signal	11	Engine Stop relay
6	GND	12	RPM output
		13	

704WA44C

4.2.4 GLOW PLUGS

Glow plugs are heating elements used to warm the air in the combustion chambers before and during engine startup. The glow plugs are located on the right side of the engine cylinder lead.

4.2.5 ENGINE STOP SOLENOID

A. CHECKING SOLENOID

Measuring resistance on both ends of engine stop solenoid

No. 09 to 01: resistance - approx. 0.4 Ω
current - approx. 32 A

No. 107 to 01: resistance - approx. 14 Ω
current - approx. 0.77 A

* Clicking should be heard when turning the key switch to "ON" position.

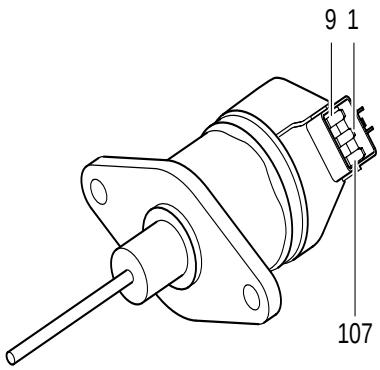

704WA22C

B. CHECKING WIRING

- Voltage between No. 107 and 01 when turning key switch to "ON": 12 V
- Voltage between No. 09 and 01 in 1 second after turning key switch to "ON": 12 V (only for 1 sec.)

4.2.6 STARTER MOTOR

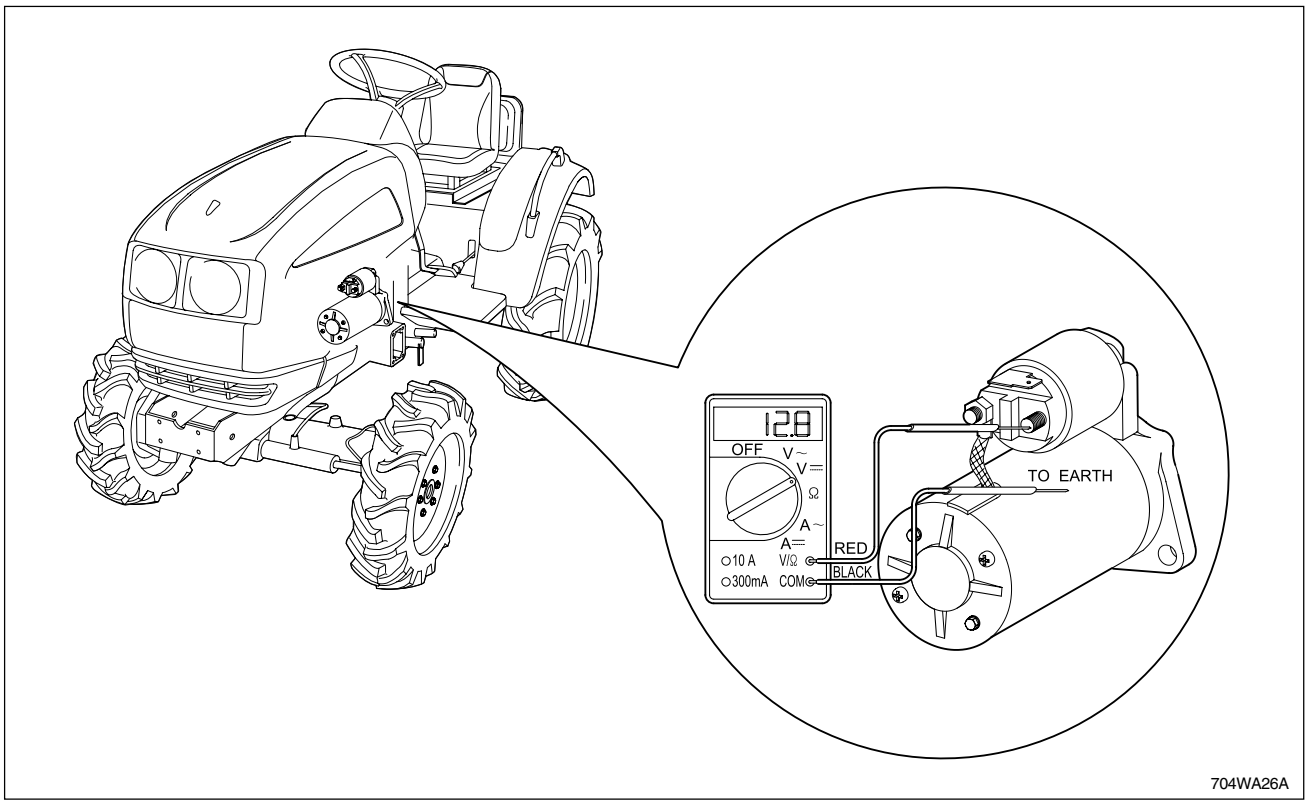

A. VOLTAGE TEST (B+ TERMINAL)

1. Measure the voltage with a voltmeter across the B terminal and chassis.
2. If the voltage differs from the battery voltage, the battery's positive cable or the battery negative cable is faulty.

NOTES:

- *If you can't start engine, this is your first step.*

B. MOTOR OPERATING TEST

CAUTION

- ***Secure the starter motor in a vise to prevent it from jumping up and down while testing the motor.***

1. Disconnect the battery positive cable and the leads from the starter.
2. Remove the starter motor from the engine.
3. Connect a battery positive cable (at least 20sq) to starter motor B+ terminal and battery positive terminal.
4. Connect a jumper lead (at least 3sq) to the magnet switch terminal and battery positive terminal.
5. When you connect the jumper lead to the magnet switch, the starter motor operates.

If the test result is not as described, replace the starter motor.

C. HOLD IN TEST OF MAGNETIC SWITCH

1. Disconnect the M terminal of the starter.
2. Connect battery negative terminal to the M terminal of the starter motor.
3. Connect Battery positive terminal to the S terminal. (Use a switch)
4. Turn the switch “ON”, the pinion will moves.
5. If the pinion does not move, change the magnetic switch.

NOTES:

- *Do not test more than 5 sec. It can cause coil failure.*

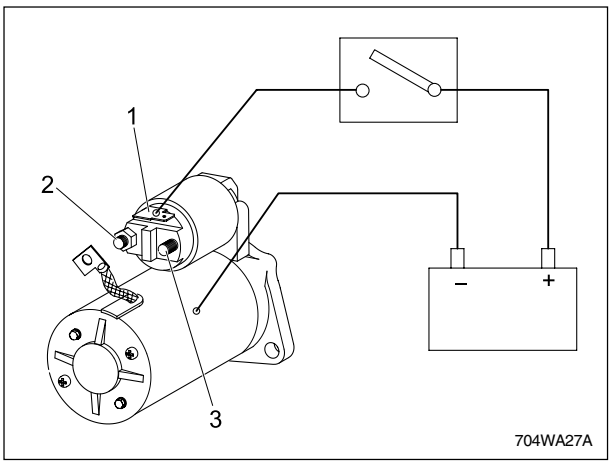

(1) S Terminal (3) B Terminal
(2) M Terminal

D. HOLD IN TEST OF SOLENOID

1. Disconnect the M terminal of the starter.
2. Connect the battery negative terminal to the chassis of the starter motor.
3. Connect the battery positive terminal to the S terminal, using a switch.
4. Pull the pinion out. If the pinion does not return quickly, the solenoid is faulty.

NOTES:

- *Do not test more than 5 sec. It can cause coil failure.*

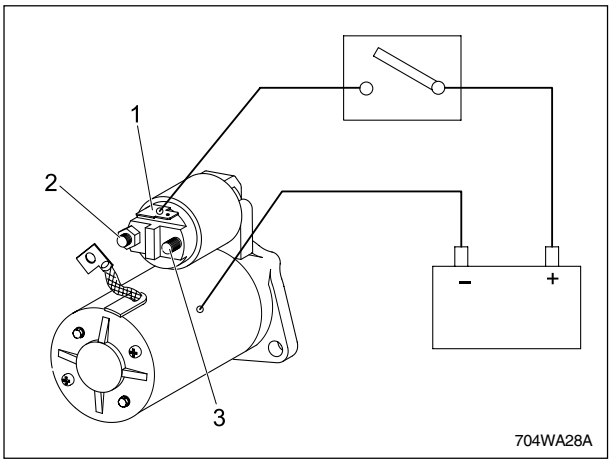

(1) S Terminal (3) B Terminal
(2) M Terminal

E. TEST OF OVER RUN CLUTCH

1. Check the teeth of the pinion and spline. If there are damages, replace the parts. Also check the teeth of the flywheel.
2. Rotate the pinion. Only rotate the pinion clockwise.

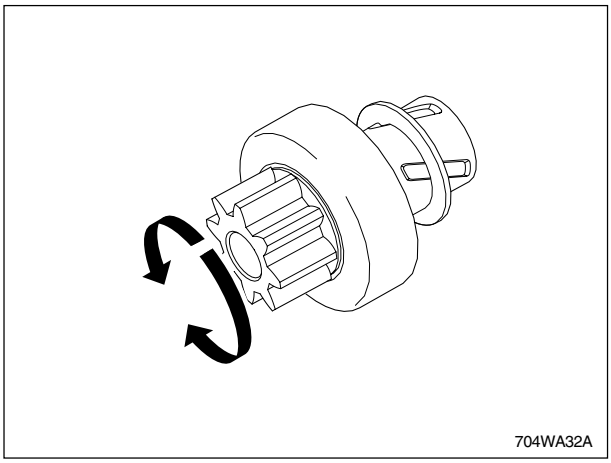

4.3 CHARGING SYSTEM

4.3.1 CHARGING CURRENT CHECK

1. After engine starts, disconnect battery positive cable, then connect the ampere meter like figure.
2. Operates all electric load(like lamps) and measure the charging current.

NOTES:

- *Connect Ampere meter only with engine starts.*
- *If the electric load is not enough, or the battery is fully charged, the test will not be valid.*

Sect.	Spec.
Ampere	max. 50 A
Voltage	14.7 ± 0.3 V
Engine rpm	2,500 rpm

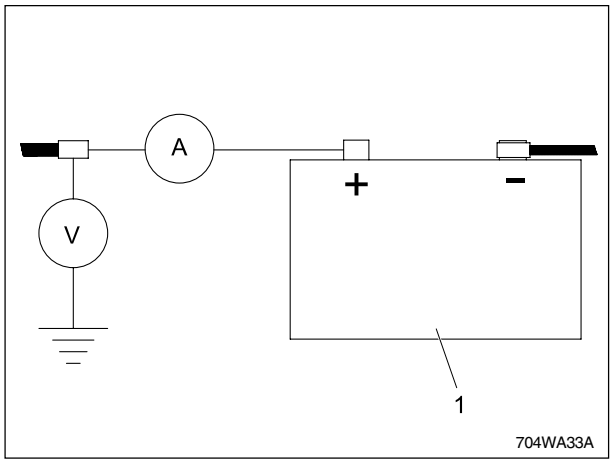

(1) Battery
(A) Ampare Meter (V) Volt Meter

4.4 LIGHTING SYSTEM

4.4.1 HEAD LIGHT SWITCH TESTING

A. USE AN OHMMETER TO TEST THE LIGHT SWITCH

- With the switch in the “OFF” position, the continuity will not exist between any of the terminals.
- With the switch in the “HEADLIGHTS” position, there will be the continuity between terminals 1 and 2, 4.
- With the switch in the mid “TAILLIGHT” position, there will be the continuity between terminals 1 and 2, 3.

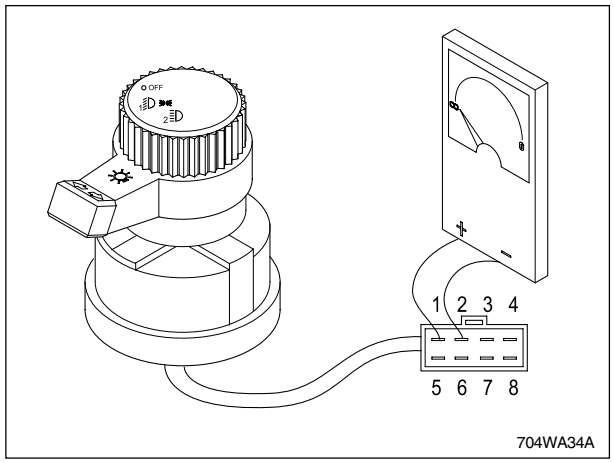

4.4.2 TURN SIGNAL SWITCH TESTING

A. USE AN OHMMETER TO TEST THE LIGHT SWITCH

- When the flasher switch knob is turned right, there will be continuity between terminals 5 and 6.
- When the flasher switch knob is turned left, there will be continuity between terminals 5 and 7.

B. SWITCH REMOVAL

- Pull up the light knob (1).
- Pull up the flash lever (2).
- Loosen the ring nut (3), then pull down the body (4), from the console.

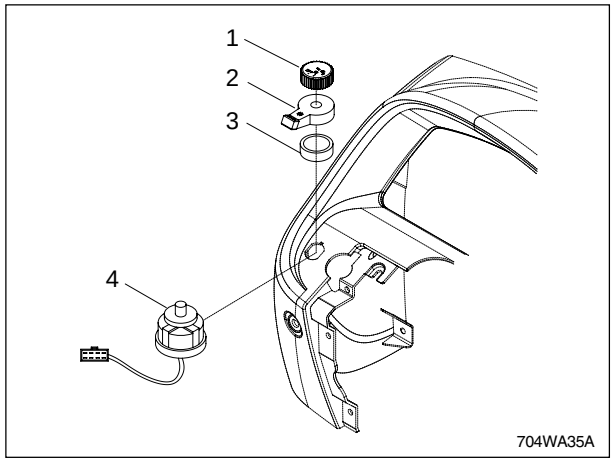

(1) Light Knob
(2) Flash Lever
(3) Ring Nut
(4) Switch Body

4.4.3 HEADLIGHTS TEST

To replace a failed head light bulb:

1. Open the tractor hood.
2. Remove the connector connected to the bulb
3. Remove the rubber cap,3, then remove the spring retainer from the headlamp housing.

Replace a new bulb in the socket, then reinstall the socket into the housing.

IMPORTANT

- ***Replace with the bulb which has same capacity.***

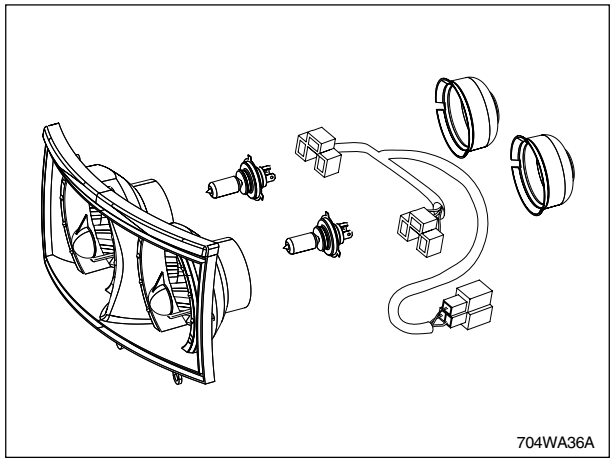

4.4.4 HAZARD LIGHT SWITCH TEST

Use the ohmmeter to test the hazard light switch.

- With the switch in the “OFF” position, there will be continuity between terminals 1 and 2, 3.
- With the switch in the “ON” position, there will be continuity between terminals 1 and 2, 3.

If test results are not as outlined above, replace the hazard light switch.

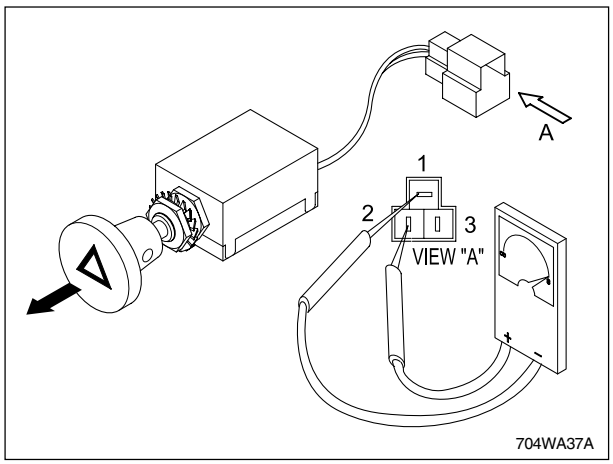

4.4.5 FLASHER UNIT

A. TERMINAL IDENTIFICATION AND CIRCUIT

This shows the terminal identification and the circuit of the flasher system.

B. FLASHER UNIT TESTING

A 12-volt battery and auxiliary light are needed to test the flasher unit. Install the battery’s positive (+) lead to terminal B of the flasher unit. Install the light’s positive (+) lead to terminal L of the flasher unit. Install the battery’s positive (+) lead to the positive terminal of the battery. Install the light’s negative (-) lead to the battery’s negative terminal. The light will flash and the unit will make a clicking sound if the unit is functioning properly.

Replace the relay if the test result does not match above.

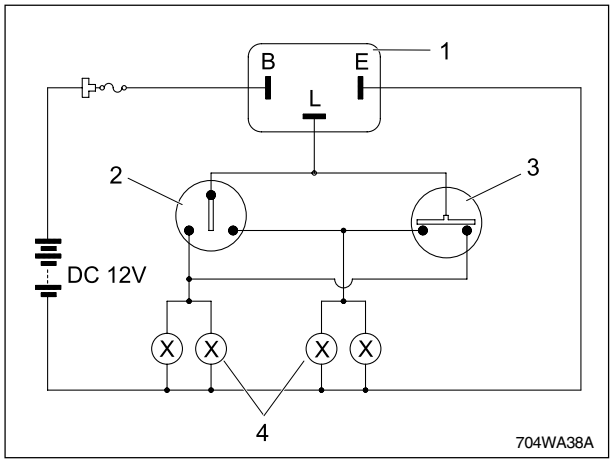

(1) Flasher Unit
(2) Turn Signal S/W
(3) Hazard S/W
(4) Lamp

4.4.6 FLASHER WARNING LIGHT

To replace a flasher warning light bulb:

1. Remove the two screws, 1, then remove the lens, 2.
2. Push in on the bulb and rotate counterclockwise in the socket to remove the old bulb.
3. Insert a new bulb into the socket and turn the bulb clockwise until tightened.

IMPORTANT

- ***Replace the bulb with one which has the same capacity as the old one.***

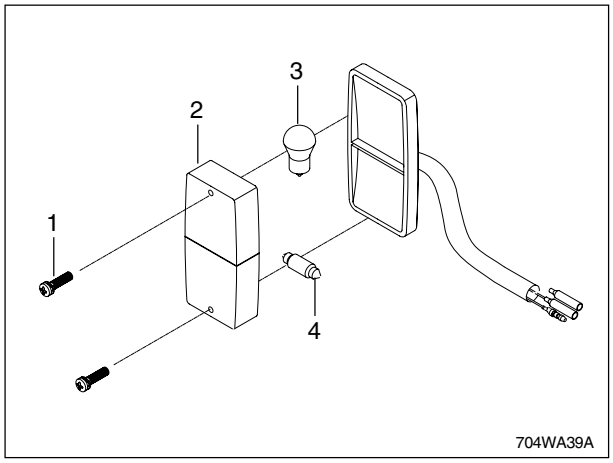

(1) Screw
(2) Lens
(3) Bulb (12V/21W)
(4) Bulb (12V/10W)

4.4.7 STOP AND TAIL LIGHTS (INSIDE: STOP LIGHT)

To replace a faulty taillight bulb.

1. Push in on the bulb and rotate counterclockwise in the socket to remove the old bulb.
2. Insert a new bulb into the socket and turn the bulb clockwise until tightened.

IMPORTANT

- ***Replace the bulb with one which has the same capacity as the old one.***

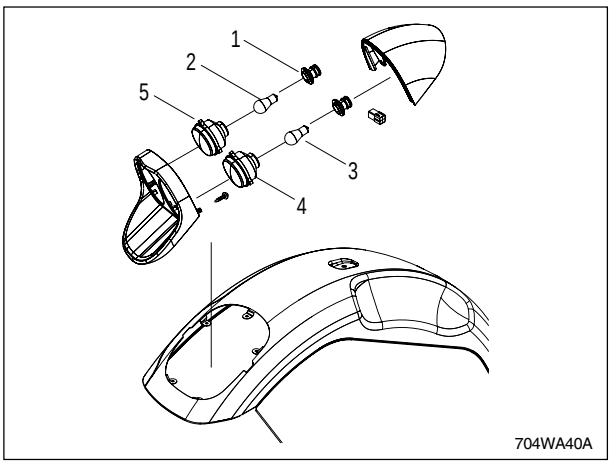

(1) Rear Lamp Harness
(2) Bulb (12V/21W)
(3) Bulb (12V, 21W/5W)
(4) Tail And Stop Lamp
(4) Turn Signal Lamp

4.5 COMBINATION METER

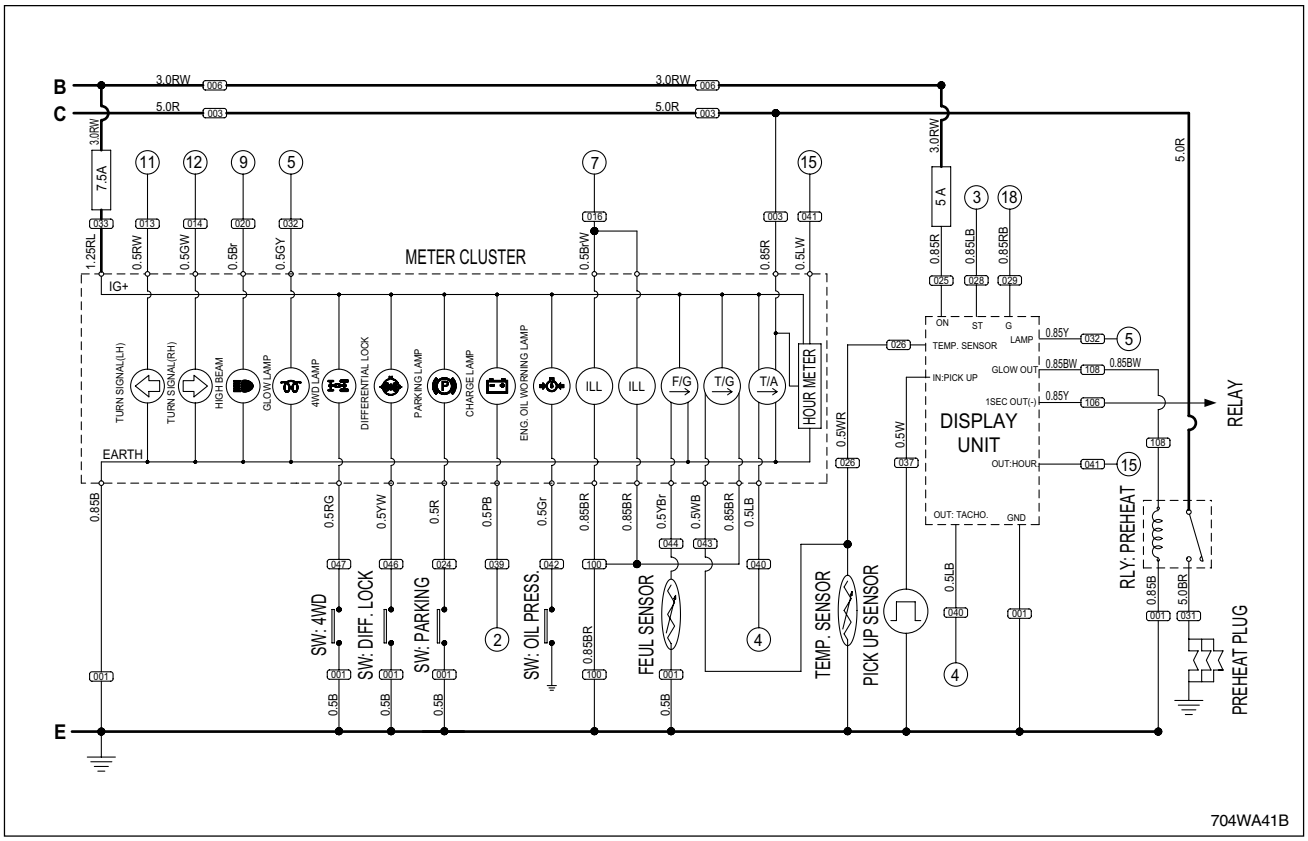

This shows circuit of the Combination meter system.

2: from Alternator
3: from Alternator
4: from Display unit (Tacho signal)
5: from Display unit (Glow p/lamp)
7: from Combination switch (Illumination)
11: from Combination switch (T/S swich LH)
12: from Combination switch (T/S swich RH)
13: from Display unit(Hour signal)

4.5.1 ENGINE OIL PRESSURE SWITCH

The oil pressure switch is located on the rear left side of the engine. The switch opens under normal oil pressure (above 0.5 ± 0.1 kgf/cm²). It closes when the oil pressure is low (0.5 ± 0.1 kgf/cm²) to complete the ground circuit of the oil pressure warning light.

When the ground circuit is completed, the oil pressure warning light illuminates on the instrument panel. It also illuminates when the key switch is turned to the “ON” position and goes out when the engine is started. If the light does not go out after the engine has started, first check the engine oil level. If oil level is correct, check for a malfunctioning switch or engine oil pump.

4.5.2 ENGINE COOLANT TEMPERATURE SENSOR

The switch detects the temperature of the coolant to operate the auto preheat of the display unit if the temperature is below 30°C.

The coolant temperature switch is located at the fromt top side of the engine inside the thermostat housing.

4.5.3 FUEL LEVEL SENDER

The fuel level sender is mounted on the top of the fuel tank. The sender float moves up and down with the fuel in the tank, while changing the resistance to the ground circuit of the fuel gauge.

A. FUEL LEVEL SENDER TESTING

Use an ohmmeter to test the fuel level sender. Remove the sender from the fuel tank. Attach one of the meter leads to the wire (yellow-brown color) of the sender.

Attach the other meter lead to the ground wire (black color), 2, of the sender or sender body.

With the sender in the “EMPTY” position, the meter indicates 103 ~ 117 Ω.

With the sender in the “FULL” position, the meter reading will be 1 ~ 5 Ω.

If the test results do not match the above, replace the fuel level sender.

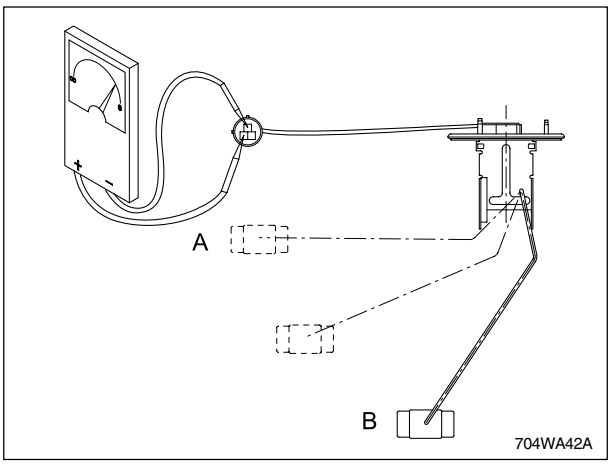

(A) Full (B) Empty

INDEX

NUMBER

3A139(CK27)/3A150(CK30)/3A165(CK35) 2-9
3-point hydraulic system 10-8

A

Adjusting brake pedal 1-19
Adjusting clutch pedal 1-18
Adjusting engine valve clearance 1-27
Adjusting fan belt tension 1-20
Adjusting front axle pivot 1-27
Adjusting procedure 1-27
Adjusting toe-in 1-25
Alert symbols 0-2
American standard screws, bolts and nuts with unc or unf threads 1-9
Appearance (hydrostatic transmission) and circuit 5-5
Assembling 5-19
Assembling and adjustment the HST pedal damper assembly 5-32
Assembly 9-19
Auxiliary control valve (if equipped) 10-19
Avoid fires 0-4
Axial sway of front wheel 8-10

B

Backlash and tooth contact between spiral bevel gear and spiral bevel pinion shaft 4-48
Backlash between 11 bevel gear and 16 bevel gear 8-22
Backlash between 11 bevel gear and 42 bevel gear 8-22
Backlash between differential pinion and differential side gear 4-50
Backlash between differential pinion and differential side gear 8-20
Backlash between spiral bevel pinion shaft and spiral bevel gear 8-21
Ballast 1-35
Basic principle of governor system 2-23
Battery 11-20
Battery 1-20
Battery installation 11-21
Battery removal 11-21
Bearing check 4-51
Bleeding fuel system 1-30
Bleeding the fuel system 2-18
Bonnet 2-39
Bonnet 3-7
Bonnet 4-27
Bonnet 5-22
Bonnet removal 9-13
Brake and tail lighting components 11-13
Brake case and discs 7-10
Brake lever and axle drive gear shaft 7-12

C

Cautions for high pressure hoses 0-6
Cautions when handling the battery 0-5
Cautions when handling tires 0-8
Changing engine oil 1-17
Changing front axle case oil 1-26
Changing transmission fluid 1-26
Charge pump 5-8
Charging 11-10
Charging current check 11-27
Charging system 11-27
Check and adjustment 7-6
Check and maintenance 1-12
Checking 11-21
Checking and adjusting 2-29
Checking and adjustment 3-6
Checking and refueling 1-12
Checking brake pedals and clutch pedal 1-14
Checking coolant level 1-13
Checking engine oil level 1-13
Checking for clearance between transmission fork and shift groove 4-52
Checking fuel line 1-17
Checking gauges, meter and easy checker 1-14
Checking head light, hazard light, etc. 1-14
Checking of brake lever 7-7
Checking oil clearance between rocker arm shaft and bushing 2-62
Checking pressure plate and flywheel 3-13
Checking radiator hose and clamp 1-24
Checking seat belt and rops 1-14
Checking wheel bolt torque 1-16
Circuit and component location 11-3
Circuit diagram 11-3
Clean working area 0-3
Cleaning air cleaner primary element 1-18
Cleaning fuel filter 1-19
Cleaning grill, radiator screen and oil cooler screen 1-14
Clearance adjustment of brake pedal 7-6
Clearance adjustment of hand brake (EU only) 7-7
Clearance between differential case and differential side gear 8-19
Clearance between differential case bore (differential case cover bore) and differential side gear boss 4-51

Clearance between differential pinion shaft and differential pinion 4-50
Clearance between front axle case bosses and bracket bushings 8-23
Clearance between gear and spline or hub and spline 4-52
Clearance between pinion shaft and differential pinion 8-19
Clearance between travelling pressure plate and adjusting screw 3-12
Clearance relationship between hydraulic arm shaft and bush 10-49
Clutch disc wear 3-13
Clutch lever wear 3-14
Clutch release hub and clutch lever 3-10
Clutch spring free height 3-14
Combination meter 11-15
Combination meter 11-31
Combination switch 11-11
Connecting rod and piston 2-54
Connecting rod and piston 2-66
Control (MLS) valve disassembly, assembly and inspection 10-42
Control linkage 5-13
Cooling system 2-7
Cooling system 2-13
Cooling system 2-16
Cooling system 2-75
Crankcase 2-51
Crankshaft 2-56
Crankshaft 2-69
Creep gear shift section (option) 4-12
Creep shift gear (option) 4-39
Creep shift lever(option) 4-18
Cylinder bore 2-72
Cylinder head 2-45
Cylinder head and valve 2-58
Cylinder head cover, glow plugs and fuel overflow ipes 2-43

D

Daily check 1-12
Differential gear 4-23
Differential lock system 4-25
Differential lock system 6-7
Dimensional setting of position control bolt 10-50
Dimensions 1-4
Disassembling 5-19
Disassembling and assembling 8-11
Disassembling and assembling of the clutch housing 3-7
Disassembling and reassembling 7-8
Disassembling axle 8-15
Disassembling bevel gear case gears 8-15
Disassembling bevel gear case, front differential case and 42 bevel gear 8-14
Disassembling differential gear 8-18
Disassembling front axle 8-13
Disassembling front axle frame 2-42
Disassembling middle case from T/M case 5-29
Disassembling of differential gear 4-47
Disassembling other engine parts 2-42
Disassembling range shift shaft 4-34
Disassembling range shift shaft group 5-30
Disassembling spiral bevel pinion 4-41
Disassembling spiral bevel pinion 5-31
Disassembling spiral bevel pinion shaft and differential gear assembly 8-16
Disassembling the clutch 3-9
Disassembling the clutch housing 4-32
Disassembling the clutch housing and middle case 5-27
Disassembling the HST assembly 5-28
Disassembling the hydraulic cylinder 10-39
Disassembling the hydraulic pump 9-13
Disassembling the hydraulic pump 9-14
Disassembling the joy-stick valve 10-32
Disassembling the middle case 4-32
Disassembling the power steering unit 9-15
Disassembling the power steering unit after disassembly 9-16
Disassembling the propeller shaft case 4-33
Disassembling the rear axle case 6-11
Disassembling transmission for HST model 5-21
Disassembling, assembling and servicing 9-25
Disassembly and reassembly 4-27
Disassembly of differential gear 5-31
Disconnecting hydraulic hoses 8-11
Disconnecting propeller shaft 8-12
Disconnecting tie-rod 8-12
Disposal of environmental waste 0-8
Dissembling bevel gear case from front axle support 8-13
Draft control (if equipped) 10-26
Draining clutch housing water 1-30
Draining front axle case oil 8-11
Draining the coolant 2-37
Draining the engine oil 2-38
Draining the transmission fluid 4-27
Draining the transmission fluid 5-21
Draining the transmission fluid 6-9

Draining the transmission fluid 7-8
Dual clutch 3-10

E

Electric component location 11-4
Engine body 2-3
Engine body 2-9
Engine body 2-29
Engine coolant temperature sensor 11-31
Engine oil pressure 2-33
Engine oil pressure switch 11-31
Engine stop solenoid 11-24
Evacuator valve 1-18
Every 1 year 1-27
Every 100 hours 1-17
Every 2 years 1-28
Every 200 hours 1-22
Every 400 hours 1-26
Every 50 hours 1-15
Every 600 hours 1-27
Every 800 hours 1-27
Exploded view 2-35
Exploded view and component disassembly 5-17

F

Fan belt 2-29
Fender 4-31
Fender 5-25
Fender 10-35
First stage (clutch pedal play adjustment) 3-6
Flasher unit 11-12
Flasher unit 11-29
Flasher warning light 11-29
Flushing cooling system and changing coolant .. 1-28
For safety 0-2
Forward 5-11
Frame assy 4-30
Frame assy 5-24
Front axle structure 8-5
Front ballast 1-35
Front cover, step 4-31
Front cover, step 5-25
Front cover, step 10-36
Front wheel drive section 4-13
Front wheel drive shift 4-19
Front wheel steering angle 8-10
Front wheels 1-33
Fuel camshaft 2-53
Fuel feed pump 2-19
Fuel filter 2-18
Fuel flow route 2-17
Fuel injection pump 2-19
Fuel level sender 11-32
Fuel system 2-7
Fuel system 2-13
Fuel system 2-17
Fuel system 2-78
Function and operation 10-7
Function of each component 5-7

G

Gap adjustment of stop switch 7-6
Gauges and indicators 11-16
Gear check 4-52
General specifications 10-3
General use screws, bolts and nuts 1-8
Glow plugs 11-24
Governor system 2-23

H

Handling of hazardous materials 0-6
Handling of rotating blade, shaft and driving belt .. 0-7
Hazard light switch test 11-29
Hazard warning switch 11-12
Head light switch testing 11-28
Headlights test 11-28
Heat seal removal procedure 2-43
Height check of cam plate and ball 7-13
High-pressure relief valve 5-8
HST damper assembly 5-26
Hydraulic block 10-9
Hydraulic circuit diagram 9-5
Hydraulic circuit diagram 10-5
Hydraulic cylinder 4-45
Hydraulic cylinder 10-38
Hydraulic cylinder bore 10-49
Hydraulic motor 5-7
Hydraulic pipe and electric wiring 2-39
Hydraulic pipe and electric wiring 3-7
Hydraulic power take-off 10-9
Hydraulic pump 5-7
Hydraulic pump 9-11
Hydraulic pump 10-30
Hydraulic pump removal 9-13
Hydraulic schematic 9-4
Hydraulic scheme 10-4
Hydraulic tube and electric wiring 4-28
Hydraulic tube and electric wiring 5-22

I

Idle gear and crank gear 2-52
Illumination 0-3
In neutral 9-6
Inflation pressure 1-32
Injection pump 2-46
Injection timing measurement and adjustment ... 2-31
Inspection 9-19
Inspection for overhaul 2-58
Inspection for overhaul 3-11
Inspection for overhaul 4-48
Inspection for overhaul 7-13
Inspection for overhaul 8-19
Inspection for overhaul 10-49
Instrument panel 9-15

J

Joystick valve 10-11
Joystick valve 10-29
Joy-stick valve 10-31
Joy-stick valve assembly 10-33
Joystick valve, etc 4-31
Joystick valve, etc 5-26

K

Key switch 11-22

L

Legend for circuit diagram 11-5
Lever position setting 10-50
Lift control (MLS) valve 10-3
Lift control (MLS) valve 10-20
Lighting system 11-11
Lighting system 11-28
Link mechanism of lift cylinder 10-24
Links 10-36
Location and stucture 10-12
Lubricants, fuel and coolant 1-7
Lubricating grease fittings 1-15
Lubricating system 2-6
Lubricating system 2-12
Lubricating system 2-15
Lubricating system 2-73

M

Main gear shift lever 4-14
Main gear shift section 4-7
Main shift cover 4-35
Main shift gear 4-37
Maintenance schedule chart 1-11
Manual steering 9-7
Measurement and adjustment 2-29
Measurement and adjustment 8-9
Mid PTO 4-43
Mid PTO 5-31
Moving check of brake cam lever 7-13
Mutual difference of release levers 3-11

N

Neutral (HST pedal: stop) 5-10
Neutral valve 5-9

O

Oil filter 10-7
Operation 9-6
Operation 10-13
Operation control 5-10
Operation of governor 2-24
Operation of MLS control valve 10-21
Operation of steering unit 9-8

P

PCV (positive crankcases ventilation) 2-25
PCV valve 2-25
Position control 10-25
Power lift assembly 10-28
Power to steering control motor 9-9
Power train 4-7
Power train 6-4
Power train diagram 4-5
Power train diagram 4-20
Power train diagram 5-3
Preheating 11-7
Preheating system 11-24
Pre-load of taper roller bearing on spiral bevel pinion shaft 8-17
Pressure plate flatness 3-13
Prevention of scald 0-7
Principle of differential system 4-24
Principle of differential system 6-5
Propeller shaft 2-40
Propeller shaft 3-8
Propeller shaft 4-28
Propeller shaft 5-23
PTO power train 4-21
PTO section 4-20
PTO shift linkage 4-22

R

Range shift lever (manual) 4-16
Range shift lever(HST) 4-17

Range shift section (HST) 4-11
Range shift section (manual) 4-10
Reaction spring assembly reference dimension 10-50
Rear ballast 1-35
Rear PTO 4-42
Rear PTO 5-31
Rear wheels 1-34
Release lever height 3-11
Relief pressure adjustment 9-27
Relief valve (hydraulic block) 10-10
Removal and reassembly 2-37
Removeing the power steering unit 9-15
Removing clutch 2-41
Removing the joy-stick valve 10-31
Replacing air cleaner element 1-27
Replacing engine oil filter 1-22
Replacing fuel filter 1-22
Replacing fuel filter element 1-26
Replacing fuel hose 1-29
Replacing fuse 1-31
Replacing HST oil line (HST type) 1-29
Replacing hydraulic oil filter & transmission oil filter (HST type) 1-23
Replacing light bulb 1-30
Replacing power steering hose 1-29
Replacing radiator hose (water tubes) 1-29
Reverse 5-12
Reverse shift section 4-9
Rocker arm assembly 2-44
Rocking force of front axle 8-9
Rops 4-30
Rops 5-24
Rops 10-35
Rops / rear axle 6-10
Rops / rear axle 7-9

S

Safe working place 0-3
Safety decals 0-9
Safety equipment 0-3
Safety gear 0-3
Safety instructions when preparing tractor 0-4
Safety tips 0-3
Seat, levers 4-30
Seat, levers 5-25
Seat, levers 10-35
Second stage (adjustment of clutch pedal stopper bolt) 3-6
Sensibility adjustment 10-51
Sensors 11-16
Separating engine & clutch housing 2-40
Separating engine & clutch housing 3-8
Separating engine & clutch housing 4-29
Separating engine & clutch housing 5-23
Separating the fuel tank 2-41
Separating the hydraulic cylinder 10-35
Separation of differential gear assembly 4-46
Separation of differential gear assembly 5-31
Service as required 1-30
Shuttle shift lever 4-15
Shuttle system 4-36
Spline backlash between clutch disc boss and main shaft 3-12
Start relay holder coil relay and preheat relay 11-23
Starter motor 11-25
Starting 11-8
Starting system 11-22
Steering cylinder removal 9-25
Steering pressure 9-27
Steering relief opening pressure test 9-27
Steering wheel 9-26
Steering wheel clearance 9-26
Steering wheel operating force 9-26
Step mat, splashboard 4-29
Step mat, splashboard 5-24
Stop and tail lights (inside: stop light) 11-30
Structure 4-23
Structure 5-5
Structure and circuit 10-20
Structure of oil filter 10-7
Structure of steering cylinder 9-10
Stud bolts 1-8
Symbols for electric components 11-5
Synchro assembly check 4-53
Synchro operation 4-8

T

Tachometer and hour meter 11-9
TD1300 specifications (CK25) 2-3
Third stage (adjustment of safety switch) 3-6
Thrust ball bearing 3-14
Tightening torques 2-8
Tightening torques 2-14
Tightening torques 1-8
Timing gears and camshafts 2-63
Tires 1-32
Toe-in 8-9
Toe-in adjustment 8-9
Tractor identification 1-3
Transmission shift linkage structure 4-14

Traveling speed 1-36
Tread 1-33
Troubleshooting of charging system 11-19
Troubleshooting of coolant temp. circuit 11-19
Troubleshooting of engine tachometer circuit 11-19
Troubleshooting of fuel level circuit 11-18
Troubleshooting of glow plug circuit 11-17
Troubleshooting of lighting circuit 11-18
Troubleshooting of oil pressure circuit 11-18
Troubleshooting of starting circuit 11-17
Tube, aux. control valve(if attached) 4-44
Tube, aux. control valve(if attached) 10-37
Turn signal switch testing 11-28
Turning to the left 9-7
Turning to the right 9-6

U

Unit conversion table 1-10
Use of appropriate tools and equipment 0-6

V

Valve 2-45
Valve camshaft 2-53
Valve clearance 2-30
Valve spring 2-61
Ventilating system 0-3

W

Wear check of brake disc 7-13
Wear check of brake plate 7-14
Wear check of cam plate 7-13
Wheel alignment 8-6
Wiring color identification 11-6
Work place 0-3